ME 450
Winter 2010
PROJECT 15

# SURGICAL LIFT FOR DR. MURASZKO

**Team Members**
ADITYA CHABRIA
DMYTRO DMYTRENKO
LOKESH JANARTHANAM
KAH WEE LIEW

## FINAL REPORT

## ABSTRACT

Two previous ME 450 student teams have successfully designed and built a surgical lift for Dr. Karin Muraszko, Chair of the University of Michigan Neurosurgery Department, who overcame Spina Bifida to become a top neurosurgeon in the world. Dr. Muraszko would now like a new seat for the surgical lift that she can use during her surgeries. This project is aimed reproducing the old lift, while choosing new medical grade casters and fabricating a novel, improved model of the seat for Dr. Muraszko. Neurosurgeons are typically involved in long operations that usually last for 12 hours. During surgery, the stability of the surgeon’s body is critical. A seat on the lift can help Dr. Muraszko perform her surgeries in greater comfort. If successful, this seat can be used by other surgeons in the future.

# EXECUTIVE SUMMARY

Dr. Karin Muraszko is the Chairperson and Director of the Neurosurgery Department at the University of Michigan Medical School. She was born with a mild form of Spina Bifida which hinders her mobility and forces her to wear a brace on her left leg. As she is 4 feet 8 inches tall, she also requires a surgical lift to elevate her to the level of the patients in the operating room [3].

Two previous ME 450 teams have designed and manufactured two surgical lifts for Dr. Muraszko. However, she is dissatisfied with certain aspects and approached Dr. Albert Shih, Professor at the Department of Mechanical Engineering at the University of Michigan, for an improved version of the surgical lift. Dr. Shih has tasked us with reproducing the lift with a mock up of the new seat for concept demonstration. This seat will be made of steel and will not be hospital ready. Furthermore, he also instructed us to select medical grade casters which previous ME 450 teams had not done.

The lift assembly was manufactured by *Protomatic*, the external manufacturer who helped develop the previous two surgical lifts. We fabricated the mock up of the seat in-house at the ME x50 Machine Shop for Dr. Muraszko to approve. The seat design has been tailored to meet Dr. Muraszko's personal preferences and requirements as she is the end customer.

The seat and lift assembly is shown in the photograph alongside and composes of a truss structure on which the seat cushion is mounted. We performed engineering calculations on the structures and components and supported it with Finite Element Analysis (FEA) performed in SolidWorks. The mechanism has adequate safety factors in all vital components and joints. The safety factors in the design are all greater than or equal to two. The results of engineering calculations and FEA matched in magnitude and are shown in Appendix F, G.

The Computer Aided Design (CAD) Drawings and manufacturing plans of the detailed design for can be found in Appendix H and I. We generated a Bill of Materials for the mechanism which can be found in Appendix J. The total cost of raw materials for the mock up is approximately $700.

We purchased all the components and have completed manufacturing and assembly of the seat mock up. We are now waiting for Dr. Muraszko to test the seat and give us feedback on the same. A new hospital ready seat will be manufactured for Dr. Muraszko's use if she finds the design satisfactory.

# CAUTION!

**The seat manufactured during the course of this project is merely a mock up solely produced as a concept demonstrator upon instruction by our sponsor, Dr. Albert Shih. It is not intended for hospital use in any circumstances. The seat assembly needs to be integrated into the proposed base structure only after adequate engineering and safety analysis on the lift base/platform. Please read Prototype Application Section (Page 34) for more details.**

## TABLE OF CONTENTS

**INTRODUCTION** 1

**MEETING WITH CUSTOMER** 1

**PROJECT PLAN** 2

**ENGINEERING SPECIFICATIONS** 4

**Customer Requirements** 4

**Engineering Specifications** 5

Table 1: Relating Customer Requirements and Target Engineering Specifications 5

Table 2: Ranking of Engineering Specifications 6

Table 3: Factors considered when generating concepts 7

**CONCEPT GENERATION** 7

**Methods Employed for Concept Generation** 7

Figure 1: Functional Diagram for the Seat Design 8

Table 4: Factors considered when narrowing down to top 5 concepts 8

**Concepts Generated** 9

Concept 1 9

*Figure 2: Slot Mechanism 9*

Concept 2 9

*Figure 3: Single Arm Swing Mechanism 9*

Concept 3 10

*Figure 4: Collapsible Arm Mechanism 10*

Concept 4 11

*Figure 5: Motorized Mechanism 11*

Concept 5 12

*Figure 6: Motorized Scissor Mechanism 12*

**CONCEPT SELECTION PROCESS** 12

**Pugh Chart Analysis** 12

Table 5: Pugh Chart shows collapsible arm and motorized mechanisms as desired designs 13

Figure 2: Seat design from surgical lift from Fall 2008 ME 450 team 14

Table 6: Summary of advantages and disadvantages of top five concepts 14

**Choosing the Best Concept** 15

**THE ALPHA DESIGN** 16

**Seat Frame and Support** 16

Figure 4: Predicted Reach of Collapsible Arm in Alpha Design 17

**Caster Selection** 17

**THE FINAL DESIGN** 18

**Figure 5: CAD Rendering of Final Design** 18

**Final Design Description** **19**
  Detailed Design of Seat Mock Up 19
    *Support Block 19*
      *Figure 6: Showing the Position of the Support Block below the Platform 19*
      *Figure 7: Support Block with Precision Hole for Press Fit. 19*
      *Figure 8: Bottom View Showing the Chamfer for the Weld 20*
    *Hub and Shaft Sub-Assembly 20*
      *Figure 9: Showing the Hubs which can rotate about the Main Shaft 20*
      *Figure 10: Section View displaying the internals of the Hub Assembly 21*
      *Figure 11: Showing the Disconnect Coupling, Shaft Collar, and Thrust Bearings 21*
    *Locking Mechanism 22*
      *Figure 12: Locking Mechanism Position on top of Main Shaft 22*
      *Figure 13: Lower Disc Welded to Upper Hub Assembly 22*
      *Figure 14: Locked Position- Disc Rotation Limited by Inserted Lock Pin 23*
    *Welded Truss Structure 23*
      *Figure 15: Truss Structure welded to Hub Assembly which rotates around the Main Shaft 23*
      *Figure 16: Close up View of Truss 25*
    *Seat Frame 25*
      *Figure 17: Seat Frame Positioned at the edge of the Truss Structure 25*
      *Figure 18: Pockets in the Frame cut to save Weight 26*
      *Figure 19: Seat Frame with Back Support. Smoky colored plate is a fiberglass plate. 26*
      *Figure 20: Sectional View of the Seat frame 27*
**Engineering Design Parameter Analysis** **27**
  Safety Factor 27
  Free Body Diagrams 28
    *Figure 21: Simple Truss Structure Approximation 28*
  Main Shaft 28
  Arm Joint Shaft 29
  Buckling Analysis 29
  Finite Element Analysis 30
  Bearing Analysis 30
    *Figure 22: Location of bearings and bolt holes in base block and main shaft 31*
    *Figure 23: Location of bearings in secondary shaft below seat 31*
  Bolt Analysis 32
  Base Support Block and Main Shaft Connection Analysis 32
  Welding Analysis 33
  Why It Will Work 33
    *Strong truss structure 33*
    *Compact Design 33*
    *Customer Satisfaction (Dr. Muraszko likes the concept) 33*
      *Figure 24: 1:6 scaled mock up to show concept to Dr. Muraszko 34*
**Prototype Application** **34**
**FABRICATION PLAN** **35**

**Manufacturing Plan** 35
**Assembly Plan** 35
ENGINEERING CHANGES 35
VALIDATION PLAN 36
**Validation of the Lift** 36
**Validation of the Seat Mock Up** 36
Play in Joints 36
Time and Steps to Deployment 36
*Table 7: Validation table summarizing engineering specifications and methods* 37
Stowaway Area 37
Reach of the Design: 38
Weight of the Seat 38
Comfort Rating of Cushion 38
Horizontal Travel Distance 38
Maximum Weight Supported 38
Material 38
Gaps in Welds 38
**Prototype Testing** 38
Figure 25: Shows the setup used in testing the seat structure. 39
Figure 26: Plot of deflection against weight for the seat and shaft deflection shows deflection increases linearly with loaded weight 39
**Results of Validation** 40
*Table 8:Summary of results from validation* 40
DESIGN CRITIQUES AND RECOMMENDATIONS 42
INFORMATION SOURCES 43
**Sterilization Methods** 43
Figure 27: Virex disinfectant used to sterlize surgical equipment 44
**Seat Cushion Material** 44
**Seat Cushion Design** 44
Figure 28: A saddle seat forces user to adopt a more ergonomic and improved body posture 45
Figure 29: Example of round seat to be used in Alpha design 45
SPECIAL CHALLENGES TO OUR PROJECT 45
**Change of Manufacturing Plans – Outsource to In-House** 45
**Welding structural members** 45
**Limited resource in the machine shop** 46
SUMMARY AND CONCLUSION 47
ACKNOWLEDGEMENTS 48

**REFERENCES** 49
**APPENDIX A** 51
**Questions & responses for our meeting with Ms. Bellairs on February 3, 2010** 51
**APPENDIX B** 54
**Gantt chart** 54
**APPENDIX C** 55
**Quality Functional Deployment Diagram** 55
**Functional Decomposition for Seat Design** 56
**APPENDIX D** 57
**Concept 1** 57
**Concept 2** 58
**Concept 3** 59
**Concept 4** 59
**Concept 5** 60
**Concept 6** 60
**Concept 7** 61
**Concept 8** 61
**Concept 9** 62
**Concept 10** 62
**Concept 11** 63
**Concept 12** 63
**Concept 13** 64
**APPENDIX E** 65
**Caster Selection** 65
**APPENDIX F** 68
**Simple Engineering Analyses** 68
Table F.1: Engineering Specifications with Targets 68
Static Analysis of Concept Design 68
Testing of the Mechanism 69
Design Drivers 69
**Appendix G** 70
**Shaft Analysis** 70
Main Shaft 70
*Figure G.1: Free-body diagram used for analysisi of main shaft* 70
*Figure G.2: Superposition of deflection due to bending moment and horizontal force* 71
Arm Joint Shaft 72
*Figure G.3: Free-body diagram used for analysis of arm joint shaft* 72

**Seat Bar** 73

*Figure G.4: Free Body Diagram for Seat Bar* 73

**Swing Bar 1** 73

*Figure G.5: Free Body Diagram for top bar in the truss structure* 73

**Swing Bar 2** 74

*Figure G.6: Free Body Diagram for angled bar* 74

**Truss Analysis** 74

*Figure G.7: Free Body Diagram of joint Analysis for the complete truss assembly* 74

**Press Fit Hole Analysis** 75

*Figure G.8: MMC Press fit calculation for support block* 75

*Figure G.9: LMC Press fit calculation for support block* 75

**Buckling Analysis** 76

*Figure G.10: Cross Section of square tube in compression* 76

**Finite Element Analysis** 77

*Figure G.11: Factor of safety plot shows minimum F.O.S of 8 occurring at the seat frame and the base of the main shaft* 77

*Figure G.12: Von-Meisis Stress plot shows maximum stresses occurring at the base of the main shaft as predicted* 77

*Figure G.13: Displacement plot show maximum displacement of 0.0015 in occurs at the edge of the seat frame* 78

**Bearing Analysis** 79

*Table G.1: Chosen Sleeve and Thrust Bearings* 79

*Table G.2: Sleeve Bearing stress analysis shows acceptable safety factors* 79

*Table G.3: Thrust Bearing stress analysis shows acceptable safety factors* 79

**Bolt Analysis** 80

*Figure G.14: Schematic diagram of base assembly* 80

*Figure G.15: Free-body diagrams used for bolt analysis* 80

*Table G.4: Bolt Stress Calculation show acceptable safety factors (for an individual bolt)* 81

**Welding Analysis** 82

*Figure G.16:Digram indicating the location of the weld and corresponding moment on the arm joint block* 82

**APPENDIX H** 83

**Engineering Drawings** 83

**APPENDIX I** 104

**Manufacturing Plans** 104

**APPENDIX J** 110

**Bill of Materials** 110

**APPENDIX K** 111

**Assembly Plan** 111

Main Shaft Sub-Assembly 111

*Figure K.1: Main Shaft Sub-Assembly* 111

Truss Structure Sub-Assembly 112

*Figure K.2: Shows the thrust bearing assembly and the truss structure* 112

*Figure K.3: Truss Structure Sub-Assembly* 112

Seat Frame Sub-Assembly 113

*Figure K.4: Seat Frame Sub-Assembly* 113

Seat Sub-Assembly 113

*Figure K.5: Seat Sub-Assembly* 113

**APPENDIX L** **114**

**Welding Plans** **114**

**APPENDIX M** **118**

**Engineering Changes** **118**

**APPENDIX N** **123**

**Validation procedure** **123**

**APPENDIX O** **126**

**Material Selection Assignment (Functional Performance)** **126**

*Figure O.1: CES Analysis for Functional Performance of Materials* 127

**Material Selection Assignment (Environmental Preference)** **128**

*Figure O.2: Pollutants from Producing 55lbs of Metal* 128

*Figure O.3: Characterization Indicator* 129

*Figure O.5: Single Score Indicator* 130

**Manufacturing Process Selection Assignment** **130**

**Design For Assembly (DFA)** **131**

*Figure O.6: Exploded View of Assembly* 132

Minimize Part Count: 132

*Figure O.7: Hub and Shaft Assembly could be made one part* 132

*Figure O.8 : Fastener could have been made one part* 133

Modularize Parts into a Single Structure 133

**BIOGRAPHIES** **134**

## INTRODUCTION

The goal of this project is to design and build a mock up (concept demonstrator) of an improved version of a surgical lift to assist Dr. Karin Muraszko in the operating room. Dr. Muraszko is currently the Chairperson and Director of the Neurosurgery Department at the University of Michigan Medical School. Despite being born with a mild form of Spina Bifida, she has overcome her physical limitations to become one of the top neurosurgeons in the world. Dr. Muraszko has to wear a brace on her left leg and being 4 feet 8 inches, she also needs a lift to elevate her to the working level in the operating room [3].

Dr. Muraszko has been using a surgical lift made by her father over 20 years ago. However, this particular lift was deteriorating, causing it to slow down and operate noisily [1]. This created the need for a new surgical lift to be designed and built for Dr. Muraszko.

Our sponsor, Dr. Albert Shih, a professor from the Department of Mechanical Engineering at the University of Michigan, has taken up the task of building a new surgical lift that meets Dr. Muraszko's needs while satisfying medical standards.

Two previous ME 450 teams have worked on a lift for Dr. Muraszko during Winter and Fall terms in 2008. However, Dr. Muraszko is not fully satisfied with the current two models. She would like to have an improved seat in the newly designed surgical lift. The goal of our project is to design and build a mock up of the seat for a new surgical lift that uses medical grade casters, and incorporates a better seat. This mock up will be a concept demonstrator of the seat design which will be made hospital ready after Dr. Muraszko approves of it.

## MEETING WITH CUSTOMER

We faced difficulties in contacting Dr. Muraszko prior to Design Review 1. Her hectic schedule meant that we did not have the opportunity to meet her in person to discuss the customer requirements. Hence, we resorted to the next best alternative which was to refer to the previous ME 450 teams' reports and consult with our sponsor Dr. Albert Shih, who had a better understanding of the project. After Design Review 1 however, we set up an appointment with Dr. Muraszko's personal assistant and head nurse, Ms.Yvonne Bellairs, on 2-3-2010 to gain insight into some of Dr. Muraszko's preferences. We prepared a questionnaire for the meeting with Ms. Bellairs (Appendix A). Her responses provided us a clearer understanding of the design requirements.

We were told that the primary function of the seat is for Dr. Muraszko to rest on and operate when required. This means that the seat support mechanism should be sturdy enough such that there are minimal joint deflections while she is seated. Another complaint was that the lift is heavy to move around and we would need to work towards reducing the weight. Ms. Bellairs also pointed out that the seat deployment need not be quick but rather needs to have a minimal number of steps involved such that one person could deploy it easily. Presently the seat deployment requires a minimum of 5 steps and 2 people to bring it in place. Moreover, each time the seat needs to be deployed Dr. Muraszko needs to alight (step off) the lift which is a great inconvenience to her. Also the sterilization of the seat cushion is currently a difficult procedure; therefore Ms. Bellairs requested that we use a vinyl covered seat cushion for our design.

Ms. Bellairs provided us valuable information regarding our project. However, it was also imperative that we met with Dr. Muraszko as soon as possible to discuss our design concepts and any other specific concern that she may have. With the help of Dr. Shih, we managed to set up a meeting with Dr. Muraszko on 2-19-2010.

On 2-19-2010, we met with Dr. Muraszko to discuss our selected seat design. We brought a miniature mock up of our design to the meeting, which we presented to her. Dr Muraszko liked the design of our seat, and told us to proceed with our selected design. In addition, she added several requests in addition to those already stated in the previous reports. She wanted a seat that had a locking mechanism and was sturdy, with almost no deflection when she sits on the seat. If possible, she wanted a seat that had back support to help her when she performs surgery. Also, she would like the option of the entire mechanism to be able to be removed during short operations when she doesn't need the seat. Finally, when the prototype is completed, she wants to test the prototype before being sending the final drawings to *Protomatic* for manufacturing.

On 3-17-2010, we met with Dr. Muraszko showing her inner working details of our design and also took measurements of her seating height. She requested for a larger cushion than the one we had planned for her.

## PROJECT PLAN

To organize our project plan we created a Gantt chart which can be seen in Appendix B, it gives an overview of the direction in which the project is headed. Included in this section is also initial fabrication plans.

We began the surgery lift project by reading the previous teams' final reports that we obtained the day that the project started on 1-12-2010. This was the first task because this was the base we would be using to build on top of; we read the two reports in the first 3 days.

Our first sponsor meeting with Dr. Albert Shih was on 1-13-2010; the meeting gave us our first insight into what the customer specifications were. We met with the manufacturer (*Protomatic*) on 1-15-2010. From this meeting we took away information about their fabrication capabilities, manufacturing timeline, material selection, and some customer specifications.

We met with one of the earlier ME 450 team members (Dayna Anderson) who designed the previous version of the lift (Fall 2008). This meeting on 1-24-2010 helped us with more information about the previous design. She provided valuable information on how to approach and prepare for the meetings with Dr. Muraszko.

Design Review (DR) 1, on 1-26-2010, encompassed written and oral portions. The written report that's due the day after DR1 encompassed information sources used for our research, customer and engineering specifications, project plan, and the project challenges. The oral presentation highlighted the motivation behind this project; presented our findings, customer requirements, engineering specifications.

The meeting scheduled with Ms. Yvonne Bellairs (personal assistant to Dr. Karin Muraszko) and Dr. Albert Shih on 1-28-2010 did not take place as Ms. Bellairs was busy. However we did get to see the lift and took this opportunity to study the design and how to improve it. We then met with Ms. Bellairs on 2-3-2010 to interview her on the project (Appendix A).

We finalized the design on 2-6-2010. The delay occurred since we could not get our questions answered by either Dr. Muraszko or Ms. Bellairs earlier. Once we finalized the seat design we created a simple CAD model and analyzed the reach with MSC ADAMS, furthermore we carried out simple hand calculations to determine preliminary deflections.

On 2-19-2010, we met with Dr Muraszko, and she approved of our concept. From there, we created a detailed design and quantified the design though CAD models. However, on 3-1-2010, our sponsor changed the scope of our project. We were instructed to design and build the seat in the x50 machine shop out of regular steel, while still outsourcing the manufacturing of the lift to *Protomatic*.

Due to the change in scope, we had to simplify the design of the seat. We performed simple hand calculations to ensure our final design was safe, and later did Finite Element Analysis in SolidWorks to confirm our hand calculations were accurate. In addition, we performed DesignSafe on components we will be manufacturing, as well as FMEA Analysis (Failure Modes and Effects) on hardware used in our design before developing engineering drawings. The engineering drawings done will be Geometric Dimensioning and Tolerancing (GD&T) compliant. Subsequently, we wrote full manufacturing plans for fabricating the seat in the machine shop (Appendix I). We completed the above tasks on 3-12-2010 and started purchasing material to begin fabrication. Purchasing of metals and hardware was done by the week of 4-16-2010.

We met with Dr. Muraszko on 3-17-2010 to show her our finalized final design. She approved of the design; however, she requested for a bigger seat that can be detachable. We incorporated this change into our design.

We started to fabricate in the x50 machine shop on 3-19-2010. Before starting, our team was trained to weld as our design involves a significant amount of welding. In addition, we regularly consulted machine shop personnel to get a better knowledge on how to manufacture our certain components. Additionally, we prepared a safety report prior to fabricating to ensure our team's safety in the machine shop, as well as when assembling and testing the seat.

We completed the fabrication of our prototype shortly after Design Review 4 on 4-1-2010. On 4-8-2010 and we went to *Protomatic* to test the seat structure. The complete procedure, test results and validation is outlined in the Validation section of this report. After testing, we painted the prototype on 4-9-2010 and conducted the final assembly at *Protomatic* on 4-13-2010. The lift was then shipped to the loading dock of the University of Michigan Mechanical Engineering (G.G. Brown) Building on North Campus to present at the Design Expo on 4-15-2010.

We will be delivering the lift to Dr. Muraszko on 4-27-2010.

## ENGINEERING SPECIFICATIONS

### Customer Requirements

To build the working model of the surgical lift we needed to translate the customer needs to engineering specifications. Our initial tasks were designing a brand new seat, arm supports and selecting medical grade casters to be installed on the current lift. Due to delays in the delivery of the lift from the supplier, our sponsor Dr. Shih modified the scope of our project to concentrate on redesigning the seat and selecting medical grade castors. In addition, due to the high cost of the manufacturing at *Protomatic*, we were instructed to fabricate the seat in the x50 machine shop out of regular steel, which will be a mockup of the final design and is not hospital ready, while outsourcing the manufacturing of the lift to *Protomatic*. Our team will put the CAD and engineering drawings of the base and the lean bar into a package and send it to *Protomatic*.

After our interview with Dr. Muraszko and her personal assistant, Ms. Yvonne Bellairs, we had a greater understanding of the design requirements. Coupled with the customer requirements that we gathered from the previous ME 450 teams' reports prior to Design Review 1, we came up with detailed set of customer requirements which are documented below with brief explanations:

- Stability & Safety
    - Dr. Muraszko would require a stable seat when performing surgery. We were reminded many times that neurosurgery is delicate and there is no room for error, therefore the seat has to support the doctor steady at all times with minimum bending and deflection.

- Comfort of the lift
    - The lift should be steady when the doctor is performing surgery. Previous teams installed a rubber mat on the top of the platform for the comfort of the doctor, as the doctor spend many hours standing on the platform.
- Comfort of the seat
    - Neurosurgery operations last for long periods of time, therefore Dr. Muraszko will require a comfortable seat to sit on when at rest or performing surgery.
- Easy mobility
    - The current lift weighs around 300 pounds, and requires 2 people to push from storage into the operating room. Also, the castors are small (3 in) and industrial grade; therefore, we were asked to use bigger casters which are medical grade.
- Simple control

    - Due to sanitary and hygiene purposes, most parts of the lift are covered in sterilized drape, including the lift vertical controls. Dr. Muraszko would require large buttons which are clearly separated to ensure she chooses the correct controls.
- Low noise level
    - The lift should not create loud noise which would contribute to the sounds in the operating room.
- Adjustable seating
    - Dr. Muraszko requires a seat that can be folded away when not needed. In addition, she wants the seat to be adjustable horizontally to her preferred angle when needed.
- Platform traction
    - Dr. Muraszko wants a lift that can be locked in place at the position she desires. The lift should not slip or be knocked off alignment when accidentally bumped into.

In addition, our sponsor added requirements of better seat design and medical grade castors. We were instructed to focus on the latest requirements stated by the sponsor as Dr. Muraszko is happy with the functionality of the lift in the other areas. Other requirements with respect to these focused topics in our view are the ability to easily and quickly deploy the collapsible seat mechanism.

## Engineering Specifications

The customer requirements described in the previous section highlighted the needs of the customer. The engineering specifications translate customer needs into measurable quantities for us to evaluate and determine targets to be achieved. As we were instructed to focus on improving certain aspects of the existing surgical lift while keeping all the other designs intact, we developed a Quality Function and Deployment (QFD) diagram (Appendix C) on the focus topic, the collapsible seat design. The medical grade casters are standard off the shelf items that will be chosen based on previous ME 450 teams' QFD diagrams. We translated customer requirements into quantifiable engineering specifications and summarized it in Table 1.

Table 1: Relating Customer Requirements and Target Engineering Specifications

| ***Customer Requirements*** | ***Engineering Specifications*** |
|---|---|
| Sturdy | Play in Joints = 0.008 inches |
| Safe | Maximum weight supported (lb)= 300 lb<br>Play in Joints = 0.008 inches |
| Can be Sterilized | Material- SAE Stainless Steel 303/304/316<br>Gap size in Welds/Crevices - 0 inches |
| Comfortable | Comfort Rating of Cushion (Scale 1-10) |
| Light | Weight (lb) depends on focus topic |
| Horizontal Adjustment | Travel distance (in) = 8 in |
| Easy to Deploy | Number of steps < 4 |

| | |
|---|---|
| Quick to Deploy | Time to Deployment < 10s |
| Hides Away | % of Platform Area Occupied < 10% |
| Maximum Reach of Seat Support | % of Platform Area Covered > 50% |

The QFDs were developed using the table above and are shown in Appendix C. Next we weighed the customer requirements from 1 to 10, 10 being highest importance and assigned values based on our judgment of the requirements. For example, we rated safety to be of highest importance and stowaway area as not so important compared to the others. Next we related customer needs to each of the other engineering specifications using a rating of 1 for weak interaction, rating of 3 for medium interaction, rating of 9 for strong interaction and blank for no interaction. We totaled these interaction effects for each of the engineering specifications and determined a ranking for the engineering specifications to concentrate on and keep in mind during design. We set targets we wish to achieve for each of these engineering specifications and benchmarked them against the present and other products [4-6]. We did not make a QFD for the entire lift as we were instructed by our sponsor to use the existing lift designs as Dr. Muraszko is quite happy with the other aspects of the lift as stated earlier. Results of the QFD showed that the 8 highest rated areas in terms of importance when designing the seat are summarized in Table 2 below:

Table 2: Ranking of Engineering Specifications

| ***Rank*** | ***Seat*** |
|---|---|
| 1 | Play in the Joints |
| 2 | Materials |
| 3 | Weight of mechanism |
| 4 | Maximum weight supported |
| 5 | Steps for Deployment |
| 6 | Gaps in Crevices and Welds |
| 7 | Travel Distance |
| 8 | % of Platform Area Covered |

As can be seen from the Table 2, there are 8 important engineering specifications which our team will have to take in to consideration when designing the new seat. However, certain specifications are not taken into account as it comes later in the detailed design and manufacturing stages. The specifications not taken into account were: Materials, Maximum Weight Supported, Gaps in Crevices and Welds and Travel Distance.

The lift is a Class I device [7] because it is not in contact with the patient in the operating room and needs to be made of materials that can be easily sterilized, therefore SAE Stainless Steel grades 303/304/316 are used in these devices [8, 9]. However, due to the high costs of stainless steel, our sponsor instructed us to manufacture a mockup of our seat design with regular steel. Nevertheless, we utilized the Cambridge Engineering Selector (CES) to choose our materials (Appendix O). This mockup will be evaluated by Dr Muraszko before being manufactured as a hospital ready seat. Dr Muraszko requested that the seat be designed for a 200 lb individual. Gaps in crevices and welds are details for the manufacturing stage. The travel distance of the seat is similar to percentage of platform area covered, which is a more accurate description for our customer specifications.

When deciding on a final design, there are 4 important specifications which we have to take into account. The specifications are listed below with detailed explanations.

Table 3: Factors considered when generating concepts

| ***Engineering Specifications*** | ***Explanation*** |
|---|---|
| Play in the Joints | There should be no play in joints to ensure the seat is steady when Dr. Muraszko is performing surgery. The design will have to take into consideration beam deflections and offer support. |
| Weight of mechanism | The seat design should be lighter than the previous design. Weight is already an issue as it hinders mobility of the lift, the new design should not include room for more potential weight. |
| Steps for Deployment | The current seat requires 2 people to deploy and takes too many steps. The new seat design should reduce the number of steps to deploy, and preferably if it could be stowed away and deployed by Dr. Muraszko herself. |
| % of Platform Area Covered | The design should cover the most horizontal area of the platform as Dr. Muraszko utilises the entire platform. |

To assist lift mobility we need to install medical grade casters that have a turn radius of 360°. These casters will be replacing the industrial grade ones that are present in the current design. In addition they have to provide increased mobility and stability which directly correlate to the size of the wheel. The new castors have to be larger in diameter than the previous lift, as well as have locking mechanisms which will lock the roll and turn the castors. Further details are available in the Alpha Design section.

## CONCEPT GENERATION

### Methods Employed for Concept Generation

This section explains how we generated our initial concepts. To design the new seat, we reviewed the current engineering specifications and started brainstorming new seat concepts which we will use in our project. We developed a functional diagram (Figure 1) to decompose the functions of each individual part within the seat design. This diagram is a continuation of the functional diagram of the lift that was developed by the previous ME 450 team in Fall 2008 (Appendix C). This provided us with a set of targets to achieve in our concepts, in terms of satisfying the functional requirements. Each individual in the team was tasked with generating 4 designs, and later presenting their designs to the rest of the team. In order to diversify the seat concepts, everyone worked independently during this phase, so as to minimize influences from other individuals.

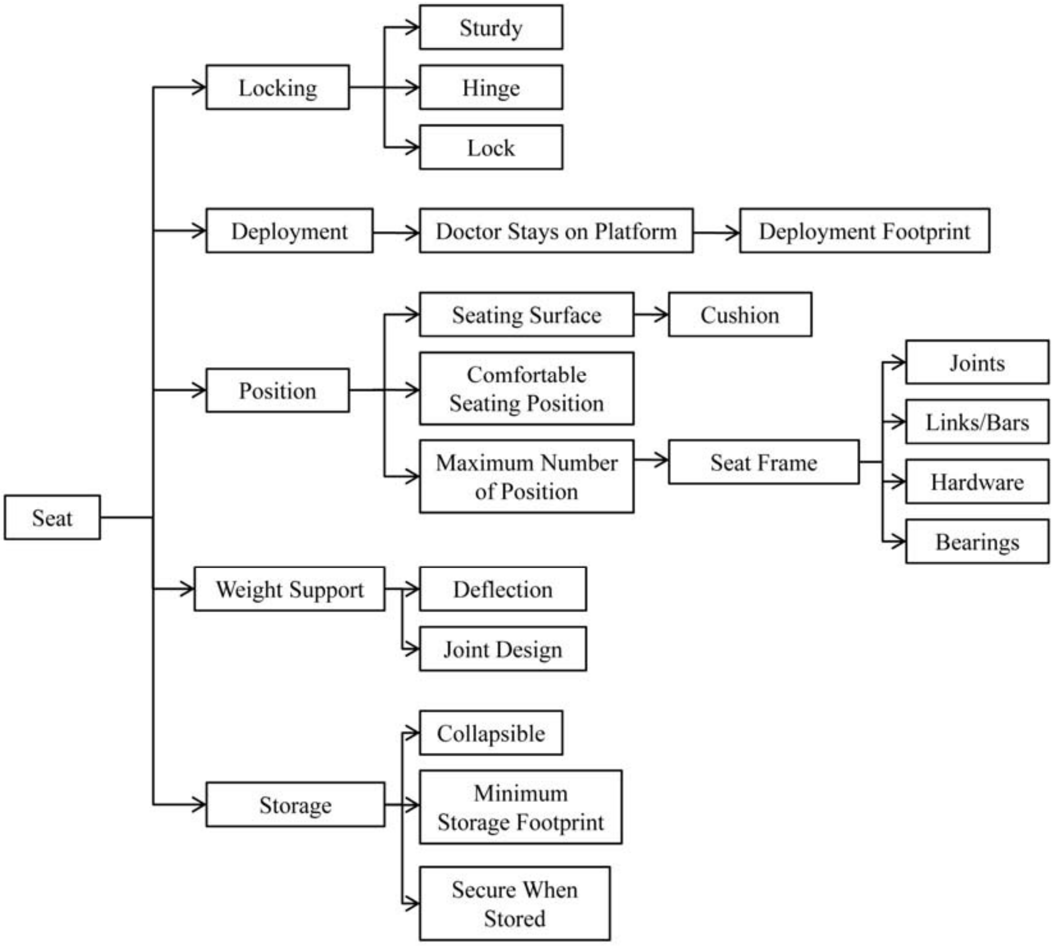

Figure 1: Functional Diagram for the Seat Design

We generated a total of 13 concepts after the brainstorming process; they are presented in Appendix D. Three pairs from the initial pool of 16 concepts were very similar and we grouped them together as single concepts. After the designs were presented, each was given a score out of 40. Each team member was allowed to vote once with a maximum score of 10. When voting, team members were required to take four main engineering specifications into account when giving the scores (Table 4). These specifications were based on the results of our QFD and our interview with Dr. Muraszko's personal assistant, Ms. Yvonne Bellairs. She indicated the important specifications to consider in our design. The scores were totaled and the 5 best designs were chosen to proceed through the next stage of concept selection.

Table 4: Factors considered when narrowing down to top 5 concepts

| Specifications for narrowing down concepts |
|---|
| Steps to deployment |
| Sturdiness |
| Weight |
| % Area of platform covered |

## Concepts Generated

The following sections present the 5 top designs our team decided through voting. Each drawing is accompanied by a short description of the type of design, the engineering requirements that have been met and pros and cons of the design.

Concept 1

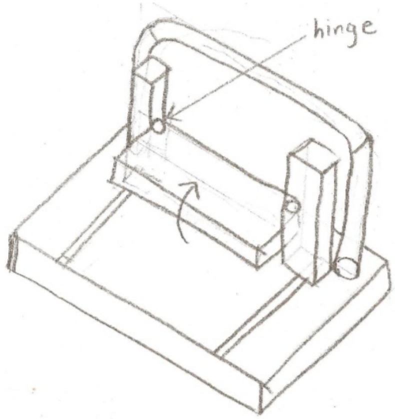

*Figure 2: Slot Mechanism*

Classification: Slots
This concept is intended to provide a sturdy seat while covering the maximum area of the platform. The seat is designed as a traditional bench; the length is much greater than the width of the seat. The adjustability is provided by two movable supports that hold the seat. The slots would serve as guides for the seat to move forward and backwards, and the seat can be stowed away with a single push.

This concept provides the doctor a sturdy seat when performing the surgery. However, the two movable supports are the weakness of the design, as the posts may easily jam when deploying. Also, the sterilization would be more difficult due to the presence of the slots.

Concept 2

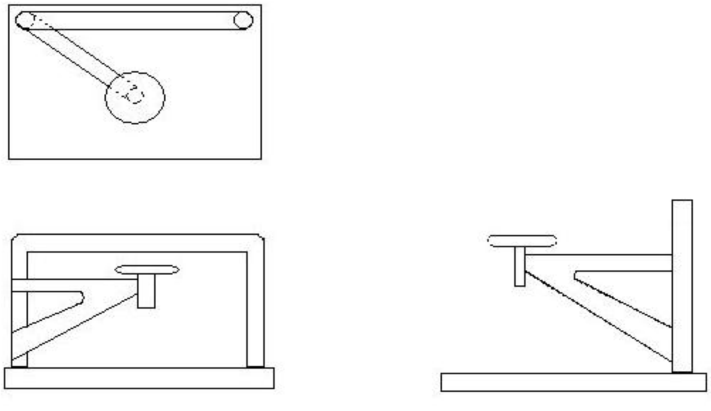

*Figure 3: Single Arm Swing Mechanism*

Classification: Single arm
One of our main customer requirements was for the seat to be stowed away easily, preferably without the use of hands as everything above the waist is sterilized. Also, our customer wanted a chair that will cover the most area in the platform. Therefore, we came up with the single swing arm, because it would be easy to deploy as the seat swings out from behind the lift, and the doctor can easily use her leg or waist instead of using her hands.

This concept is considerably lighter than the current seat since it has fewer components. It can be easily deployed and stowed away with a single push. It also has a small stow away area. However, the major weakness of this design is the deflection of the arm when our customer sits on the seat, as well as the unsymmetrical coverage of platform area.

Concept 3

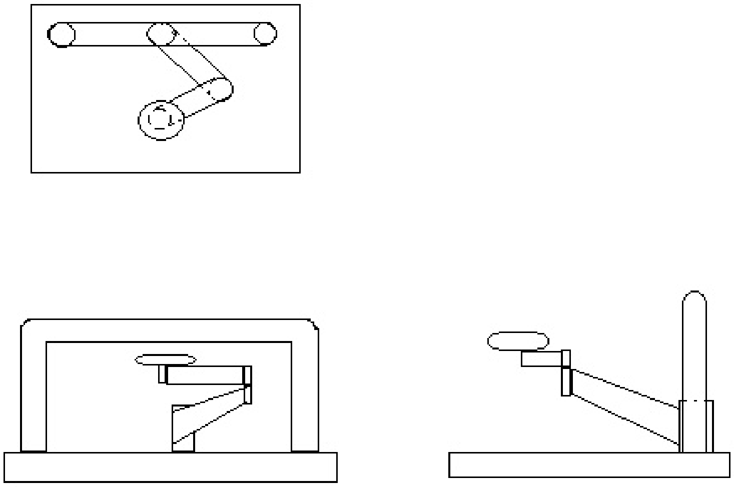

*Figure 4: Collapsible Arm Mechanism*

Classification: Collapsible arm
This is a swing seat with 2 arms crossed at a hinge. It is an upgraded version of the single arm, allowing us to have a wider range of motion as the seat will be easily deployed to whichever position the customer desires, and can be pushed back underneath the lean bar and out of the way quickly. A round seat is used to ensure our customer can be seated at any angle with minimum disturbances from square seat edges.

This concept is simple and can be fabricated easily. Also, the seat can be deployed and stowed away easily. However, we anticipate a large vertical deflection at the arms which compromises the sturdiness of the seat.

Concept 4

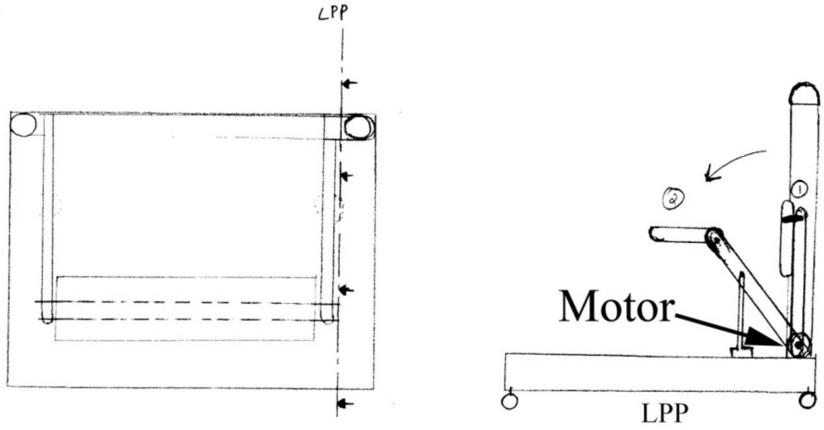

*Figure 5: Motorized Mechanism*

Classification: Motorized
In our interview with Dr. Muraszko's personal assistant, Ms. Yvonne Bellairs, she said there is interest of the seat being deployed at the touch of a button, which lead us to designing a seat deployed with a motor. It would eliminate any physical actions to deploy and stow the seat.

This mechanism consists of a motor mounted at the bottom of the platform which transmits torque through a series of gears/sprockets in order to deploy the seat mechanism into position. The support for the seat along with the seat will be connected to a linkage mechanism which at the touch of a button will unfurl into a stable seating platform for Dr. Muraszko. The third leg will be deployed by gravity as the seat support is unwinding. This leg will provide the additional sturdiness to the seat mechanism. The seat will sit on 2 supports and will behave as a bench which will cover most of the area of the platform.

Advantages of this mechanism are that the seat can be deployed or stowed away with the flick of a switch. This will eliminate all issues of steps to deployment. The switch could be a simple foot pedal further eliminating the concern of sterile hands being contaminated. Secondly the design makes it quite sturdy compared to the earlier model while possibly being lighter too.

The main disadvantage of this system is that the seat cannot be adjusted horizontally due to the nature of the design. It is also possible that this mechanism may turn out to be heavier than the current one due to the motor and transmission. The transmission will need to be in a stainless steel housing which would require repeated maintenance of the gears and sprockets. Proper greasing will have to be done periodically otherwise the noise level and motion may be compromised. Another problem would be the difficulty in stowing away the seat in the middle of a surgery, or collapsing in the middle of surgery, which would lead to severe implications.

Concept 5

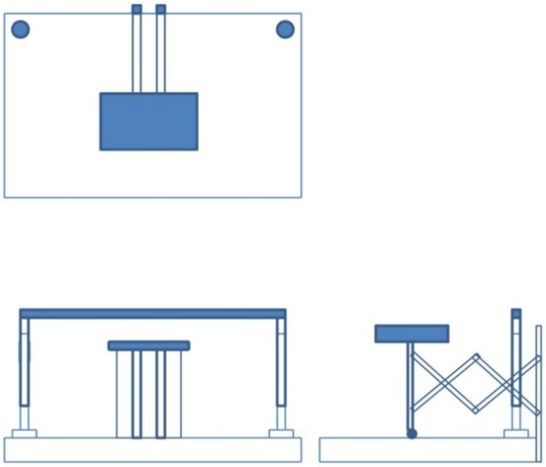

*Figure 6: Motorized Scissor Mechanism*

The inspiration behind this design was the scissor mechanism that we can find in many applications today. This design uses such a scissor mechanism to deploy and stow away the seat. In addition, it has the option of being motorized. This design facilitates deployment as it can be easily used by pulling the seat out. This design also provides the user with the required sturdiness as there is a vertical support present underneath the seat. However, the seat does not have horizontal or sideway adjustments, limiting the amount of space that can be utilized on the platform.

## CONCEPT SELECTION PROCESS

### Pugh Chart Analysis

Once we narrowed down our top 5 seat design concepts from the lateral brainstorming process, we were in a better position to decide on the final desired concept. It is much easier and efficient to objectively compare the 5 most feasible designs than run through all the 13 design concepts in great detail. In order to select our final concept, we decided to perform a Pugh Chart Analysis of the 5 chosen designs.

A Pugh Chart compares each individual design against a datum based on a number of different selection criteria. A concept is awarded a plus (+), minus (-) or neutral (0) score for each of the selection criteria. In each case, the design in question is compared to the datum in terms of that particular selection criterion. A plus score indicates an improvement from the reference design, a neutral score indicates parity and a minus score indicates a drop in functional realization. Finally, the scores for all the selection criteria are summed for each concept and the net score is determined.

The benefit of using a Pugh Chart is that is allows for a fair comparison of each concept against a common reference. It also highlights the positives and disadvantages of each design. The net score determined points out how much of an improvement a particular concept is compared to the reference design.

Our Pugh Chart Analysis is shown in Table 5. The datum was the seat design used by the previous ME 450 team (Figure 2). We decided to use this as our reference as it directly compares each of our designs with the current, existing design that we need to improve. This also allows us to gauge the extent of improvement that the new designs can offer.

Our selection criteria were directly based on our customer specifications (Table 2) so as to ensure that our concept was chosen with the customer wants in mind.

Table 5: Pugh Chart shows collapsible arm and motorized mechanisms as desired designs

| Concept | A | B | C | D | E | REFERENCE |
|---|---|---|---|---|---|---|
| Design<br>Selection Criteria | Single Arm Swing | Collapsible Arm | Motorized Scissor Mechanism | Motorized Mechanism | Slot Mechanism | *ME 450 Fall 2008 Team* |
| Quick to Deploy | + | + | + | + | 0 | 0 |
| Easy to Deploy | + | + | + | + | + | 0 |
| Sturdy/Safe | - | - | 0 | + | 0 | 0 |
| Comfortable | 0 | 0 | 0 | 0 | - | 0 |
| Deployment Weight | + | + | + | + | + | 0 |
| Horizontal Adjustment | - | + | + | - | + | 0 |
| Can Be Sterilized Easily | + | + | - | + | - | 0 |
| Overall Weight of Lift | + | + | - | 0 | 0 | 0 |
| Stowaway Area | - | 0 | 0 | + | 0 | 0 |
| Plus | 5 | 6 | 4 | 6 | 3 | |
| Minuses | 3 | 1 | 2 | 1 | 2 | |
| Neutral | 1 | 2 | 3 | 2 | 4 | |
| | | | | | | |
| Net | 2 | 5 | 2 | 5 | 1 | |
| Rank | 2 | 1 | 2 | 1 | 3 | |
| Continue? | No | Yes | No | Yes | No | |

Figure 2: Seat design from surgical lift from Fall 2008 ME 450 team

The Pugh Chart shows that the Collapsible Arm Mechanism (Concept 3) and the Motorized Mechanism (Concept 4) were the top ranked designs, with equal net scores. Thus we had to combine the results of the Pugh Chart Analysis with objective reasoning to determine our final design. We also felt that it was necessary to compile the advantages and disadvantages of each of the five concepts so that any major positives or shortcomings of the design can be readily analyzed. This is presented in Table 6 below. This summary of advantages and disadvantages of each design provides a concrete guideline in choosing the final concept in the following section.

Table 6: Summary of advantages and disadvantages of top five concepts

| Design | Advantages | Disadvantages |
|---|---|---|
| Single Arm Swing | • Simple, efficient design<br>• Could be mounted on existing lean bar | • Difficult to stow away completely<br>• Seat positions limited by arm path |
| Collapsible Arm | • Offers infinite seating positions (within arm movement range)<br>• Arms can be locked if needed | • Difficult to completely eliminate play in joints<br>• Need to ensure seat does not interfere while standing |
| Motorized Scissor Mechanism | • Easy to deploy seat with a button<br>• Compact with small stowaway area | • Added weight of a motor<br>• Many avenues for failure of the motor<br>• Regular maintenance of motor required |
| Motorized Mechanism | • Easy to deploy seat with a button<br>• Dr. Muraszko can be on the platform when seat is deployed or stowed away | |
| Slot Mechanism | • Seat can be adjusted to cover entire platform area<br>• Rigid vertical supports follow seat at every position | • Difficult to incorporate slots in the lift<br>• Seat and vertical supports cannot be stowed away<br>• Difficult to sterilize the interior surface area of slots |

## Choosing the Best Concept

The subsequent stage after the Pugh Chart Analysis was choosing the final design concept. Our selected concept is the collapsible arm mechanism (Concept 3). Our selection of this concept is based on three main reasons.

Firstly, our team felt that a simple concept was to be desired. Complexities are bound to arise during the detailed design stage and a way to limit these issues is to select an uncomplicated Alpha Design, based on elementary mechanical principles, such as revolute joints with the presence of a locking mechanism. Moreover, a simple design would provide for a greater scope for additions or improvements to the design at a later stage. A complicated design, such as the motorized mechanism may introduce electrical or mechanical limitations that the motor may impose. The inclination towards a simpler design was one of the distinguishing factors that allowed us to evaluate the top ranked designs from our Pugh Chart Analysis.

Secondly, the Pugh Chart Analysis indicates that the collapsible and motorized mechanisms are overall improvements over the current design. We also felt the need to look beyond the net score indicated by the Pugh Chart Analysis and delve into the shortcomings of the collapsible seat mechanism. We determined that the main shortcoming of this concept is the sturdiness of the mechanism, determined by the play in the joints. However, the design of the joint itself is not set in stone and a rigid joint, when locked, could indeed provide the required sturdiness that the doctor requires. Thus, we felt that it would be much more productive if we were to focus all our efforts into addressing this one inherent weakness.

The other concepts would incorporate a number of features and issues we would need to address, while also keeping in mind the shortcomings that they posses. The motorized mechanism would introduce the applications and difficulties involved with using a D.C. motor, yet we would still need to address the pertinent mechanical issues such as stowaway area and weight considerations. The slot mechanism would also present the undesirable aspect of milling slots in the surgical lift platform that could in turn affect a number of factors such as the overall lift weight, lift safety and ease of sterilization. Hence, the collapsible seat mechanism presents a specific challenge that could be addressed with our engineering expertise, while otherwise generally satisfying the customer requirements.

Thirdly, we considered the number of possible parts in the mechanism. A greater number of parts often leads to greater complexity and increases the chances of binding in the mechanism. The collapsible seat mechanism has minimal parts ( 3 joints, 2 arms) and hence there are fewer avenues for failure. The motorized or scissor mechanisms would introduce the likelihood of failure of a D.C. motor or scissor mechanism as well. There is a possibility that the D.C motor could stall and the scissor mechanism could bind due to incresed friction. Although there are avenues for failure of the collasible seat mechanism as well, they are smaller in number and are purely mechanical in nature, compared to electrical features present in a D.C. motor. Moreover, fewer parts in a mechanism would increase ease of manufacturing and assembly, allowing the protype to be completed in a shorter span of time.

We also discussed the choice of our design with our sponsor Dr. Albert Shih, and our mentors, Professor Wineman and Mr. Steven White. Their inputs and opinions were taken into consideration during this selection process. We were also careful not to look at the results of our Pugh Chart Analysis superficially, at face value, but rather use our engineering judgement to foresee possible issues and make a well considered decision.

## THE ALPHA DESIGN

### Seat Frame and Support

The concept selection process helped us narrow down our alpha design to a collapsible arm mechanism (Figure 3). We developed this model using CAD software, SolidWorks. The frame is designed so that Dr. Muraszko is able to position herself anywhere within the operable reach of the arm. This is achieved by having two bars that can swivel about the ends thus minimizing the number of parts; furthermore the structure is compact when collapsed. Incorporating a frame that only pivots about a vertical shaft would require minimal effort to deploy the seat. The previous seat required a minimum of two people to deploy it and our Alpha Design would address this major downfall.

During our first meeting with Dr Muraszko, we presented her with a miniature mockup of our design. She liked our concept, and she wanted us to proceed designing the new seat based on this concept. Also, she was happy with the predicted reach of the seat, as it gave her flexibility on how she wanted to adjust the seat. As our customer was satisfied with our alpha concept, we proceeded designing the seat based on the collapsible arm mechanism, as shown below.

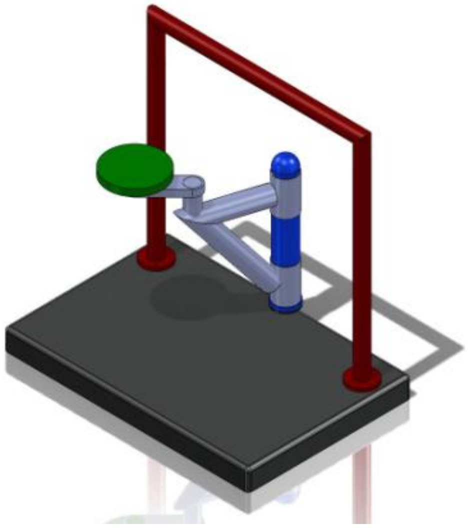

Figure 3: CAD Model of Alpha Design

The frame would have to be mounted on a hinge in order to allow rotation; this hinge design will be a crucial element and will have to incorporate a locking mechanism. The deflections associated with hinges/joints can be addressed by having tight tolerances in the bearings/connections.

The position of the seat has infinite possibilities due to the double arm design which satisfies the customer requirement to have the seat adjustable in the horizontal plane. To help visualize how this is achieved, we created a simple MSC ADAMS (a multi-body dynamic and motion analysis software) model, Figure 4, which shows all the possible positions that an 11 in and 7 in arm combination can provide.

The seat geometry that we chose is a circular vinyl covered cushion. This geometry allows Dr. Muraszko to choose the most comfortable position by eliminating corners. The vinyl covering allows for easy sterilization of the seating surface.

This design also allows for Dr. Muraszko to stay on the platform while the seat is being deployed which would save a lot of time and encourage the use of the seat. It is major improvement over the current seat design because Dr. Muraszko does not have to dismount the lift for the deployment of the seat.

The downfall to this design is that it is essentially a cantilevered beam. Thus the vertical and horizontal deflections have to be analyzed in great detail. Our preliminary idea to solving these issues is to create an arm mechanism that resembles a truss; this would help increase the overall stiffness of the frame and would be much lighter than using a heavily reinforced plate.

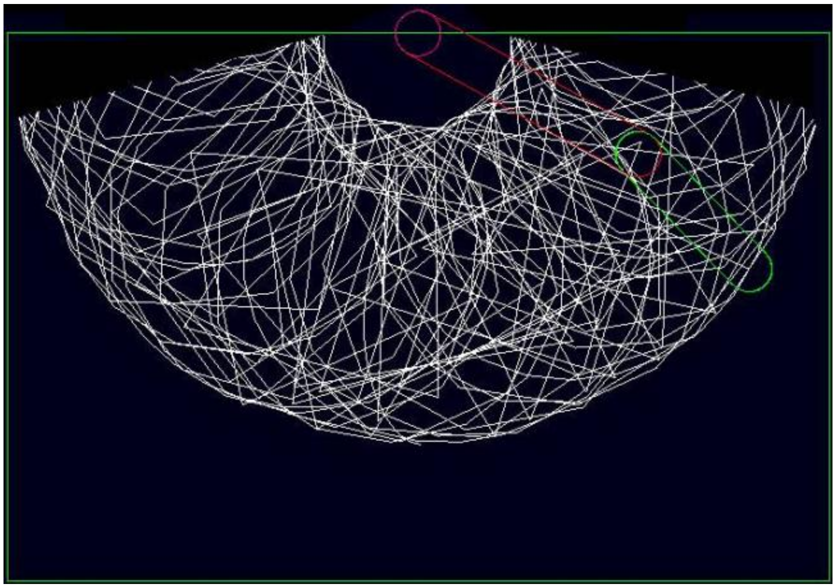

Figure 4: Predicted Reach of Collapsible Arm in Alpha Design

### Caster Selection

Casters play an important role in the mobility and maneuverability of the lift mechanism from the storage area to the operating room. The casters however, are to be sourced from an external manufacturer; hence there would be no fundamental design generation from our side. Presently, the lift uses 3” diameter casters made of polyurethane with a load capacity of 300 lbs. We chose 4 casters to narrow down our options. 2 of the chosen casters were of larger diameter size (3.5” and 4”) than the earlier ME 450 teams’ design and the remaining 2 were of the same size. The load bearing capacities of all selected casters were around the same value of 250 lbs.

Ms. Yvonne Bellairs mentioned that the lift was difficult to maneuver and position in place hence we put this down as one of our criterion in the Pugh Chart selection table (Appendix E). Braking mechanism is an important criterion as the lift needs to be locked in place so that it does not slide when Dr. Muraszko is stepping on or off the lift. Caster diameter size also determines the platform height, load bearing capacity as well as shock absorbing ability. Results of the Pugh chart showed that the Shepherd Industries 3.5” swivel top plate medical grade caster ranked first, leading us to believe it is a good trade-off between taller platform size and maneuverability.

## THE FINAL DESIGN

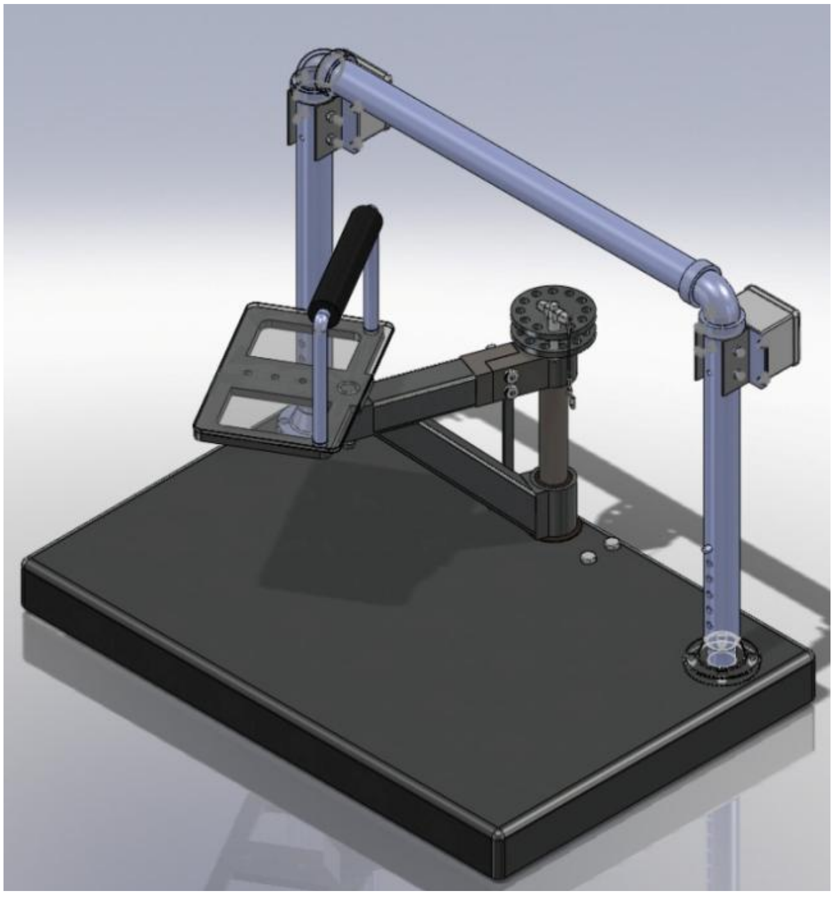

**Figure 5: CAD Rendering of Final Design**

## Final Design Description

### Detailed Design of Seat Mock Up

This section explains the working of the entire seat mechanism which has been classified into sub assemblies. For the raw materials used in each of these sub-assemblies, please refer to the Bill of Materials (Appendix J). For analysis of each of the components please refer to Appendix F, G. Design for Assembly (DFA) and Material Selection can be found in Appendix O.

#### *Support Block*

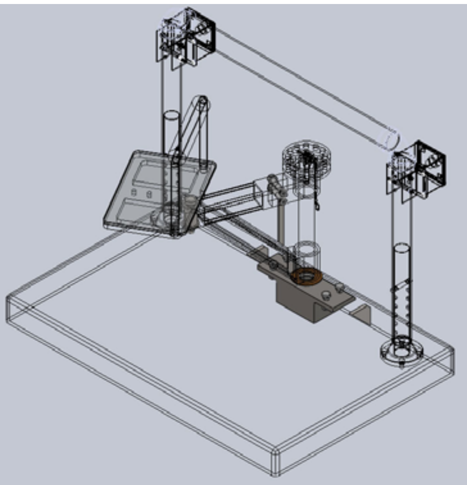

*Figure 6: Showing the Position of the Support Block below the Platform*

The support block shown in Figure 7 is the most important component in the seat mechanism as it supports the main shaft which in turn supports the truss structure. Any misfit in this block will directly transform into play in joints and an unsteady mechanism. We need to make sure the block will be able to support a 200 lb person sitting on the seat for multiple numbers of hours. We chose a 3in. x 3in. x 10in. block to be placed under the platform of the lift so that it is hidden from view and also lowers the center of gravity (Figure 6). There will be holes drilled through the lift platform to allow for the block to be placed under it. Holding the support block in place are 6 bolts which are 0.5in. in diameter that carry all the shear and tensile forces. These bolts counter the moment caused by the 200 lb individual sitting on the seat. We will be press fitting a precision 17in. long and 1.5in. diameter shaft through the precision hole bored in the support block. This shaft will remain stationary and locked while the truss structure will swivel around this shaft.

*Figure 7: Support Block with Precision Hole for Press Fit.*

The press fit will be our first mechanical lock. The second lock will be a weld that we plan to place at the bottom of the support block and shaft. As can be seen in Figure 8 there is a chamfer which aids in the placing of the weld bead giving us excellent penetration of the weld gap.

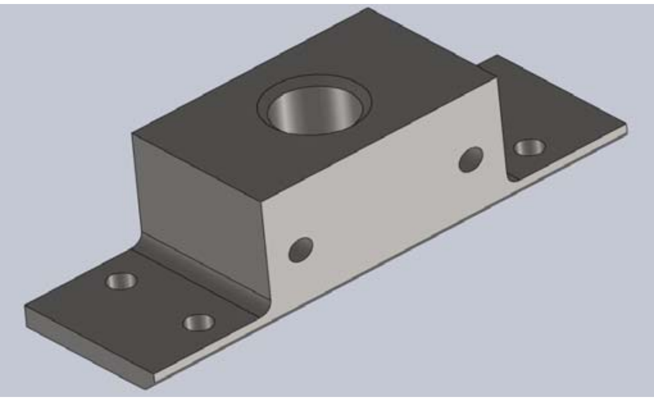

*Figure 8: Bottom View Showing the Chamfer for the Weld*

*Hub and Shaft Sub-Assembly*

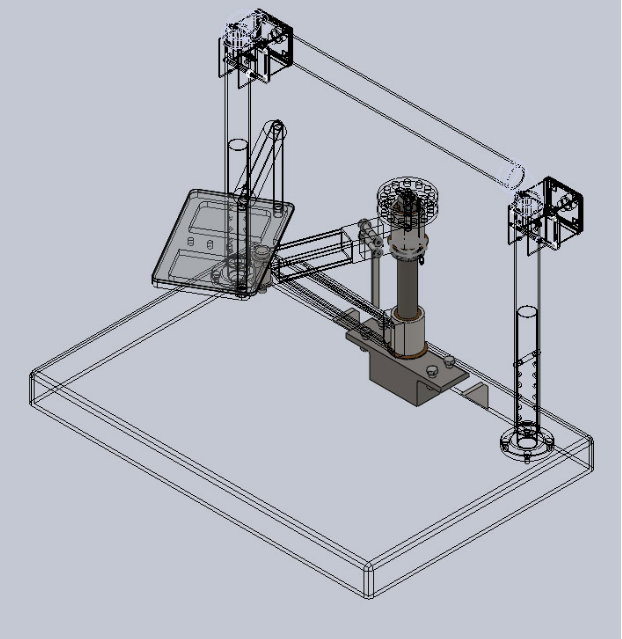

*Figure 9: Showing the Hubs which can rotate about the Main Shaft*

The hub assembly rotates around the main shaft with the help of sleeve bearings placed within the hubs (Figure 10). These sleeve bearings are pressed into hubs which are basically pipes having high wall thickness of 0.25 in. Both the hubs have an adapter (shown in Figure 19) which allows for welding the square stock of the truss structure to the hub itself. These adapters are shaped such that they cover the hub over half the perimeter and can be welded onto the hubs individually.

The adapter on the upper hub has a disconnect coupling (Figure 10) welded onto it which will help in final assembly of the truss structure to the shaft. This will be required as it is difficult to align the hubs concentrically after warping due to welding takes place.

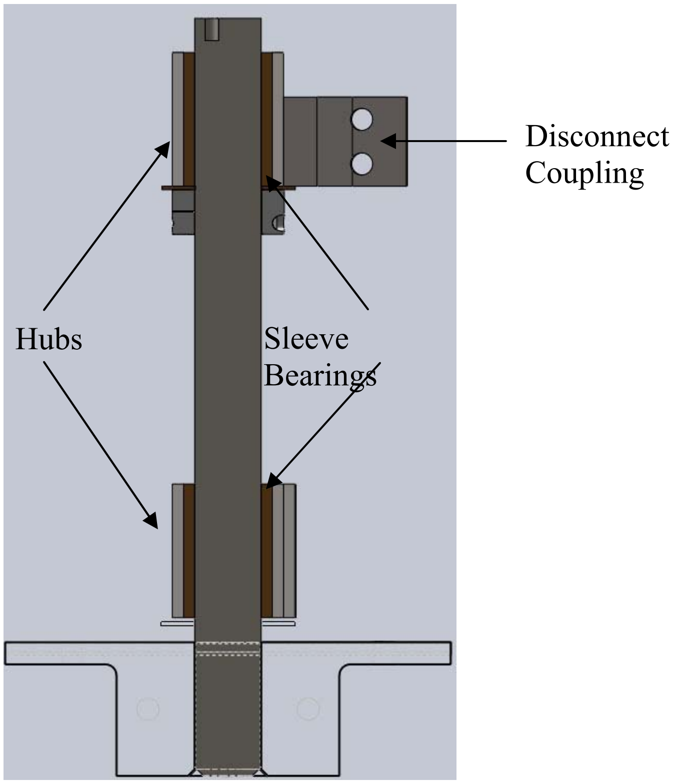

*Figure 10: Section View displaying the internals of the Hub Assembly*

There is a shaft collar (Figure 11) limiting the vertical motion of the upper hub assembly. This collar has to hold the vertical forces of the 200 lb individual sitting on the seat for hours.

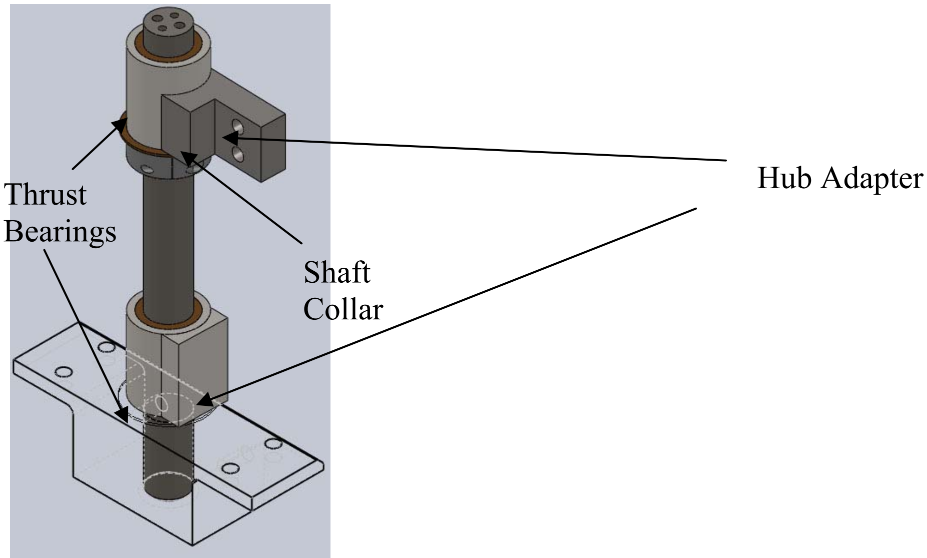

*Figure 11: Showing the Disconnect Coupling, Shaft Collar, and Thrust Bearings*

*Locking Mechanism*

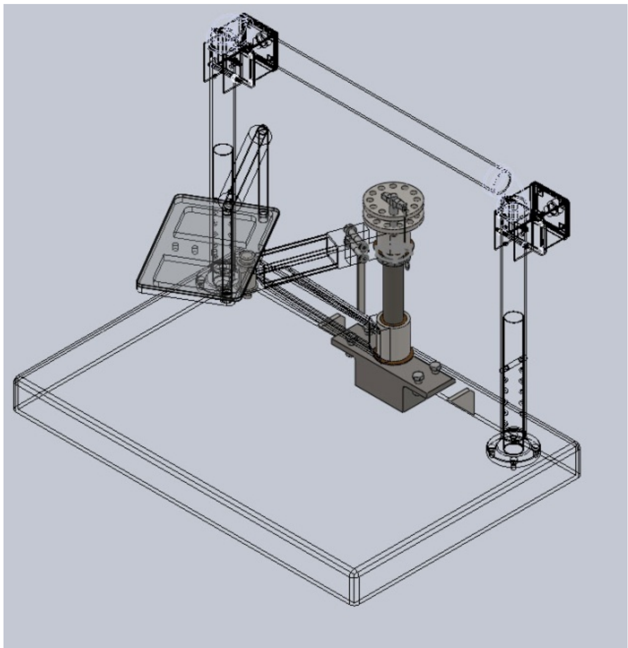

*Figure 12: Locking Mechanism Position on top of Main Shaft*

The locking mechanism consists of 2 similarly shaped discs with locating locking holes placed at 30 degree intervals around the circumference (Figure 13). The lower disc is welded to the upper hub which is attached to the rotating truss structure whereas the upper disc is bolted and fixed to the main shaft (Figure 13).

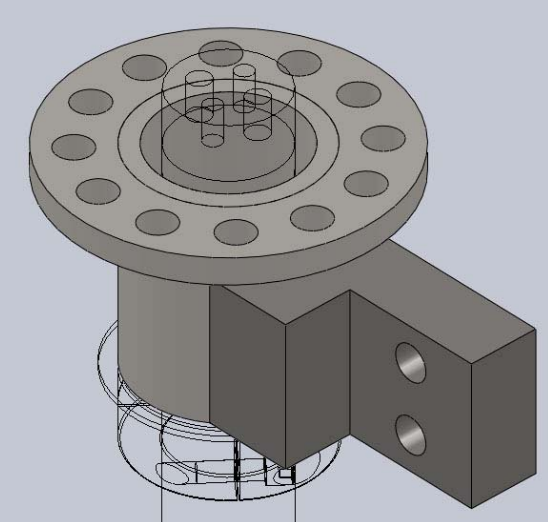

*Figure 13: Lower Disc Welded to Upper Hub Assembly*

There are 2 bolts and 2 dowel pins holding the upper disc to the main shaft. The bolts were used to fix the upper disc to the top face of the main shaft and prevent any vertical motion. The dowel pins were used provide additional support to resist any shear stresses experienced if the upper disc is rotated relative to the main shaft. The orientation of the seat can be locked and maintained as and when Dr. Muraszko wishes. There is a locking pin which can be easily inserted into the positioning holes when the seat has to be locked in place. This locking pin will be holding all the shear of movements of Dr. Muraszko trying to move the locked seat (Figure 14).

The advantage of this locking mechanism is that it is easy and quick to lock in place requiring just one person to do so. The locking mechanism is a secure and safe lock as it limits motion of the seat structure around the main shaft without compromising the time of people in the operating room.

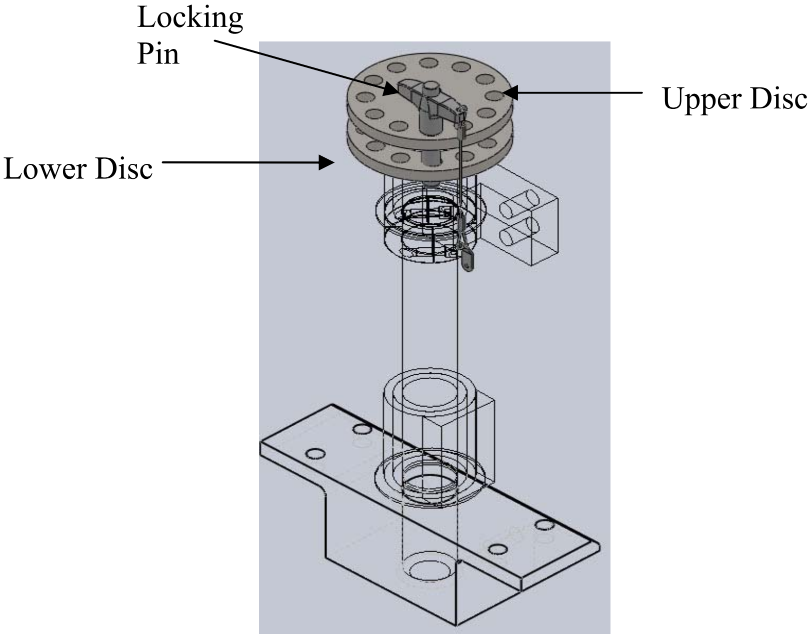

*Figure 14: Locked Position- Disc Rotation Limited by Inserted Lock Pin*

*Welded Truss Structure*

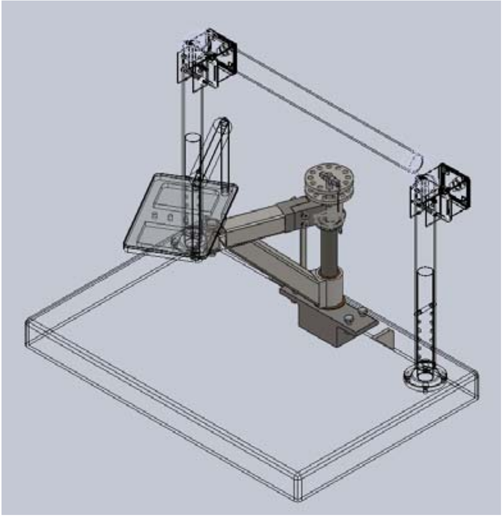

*Figure 15: Truss Structure welded to Hub Assembly which rotates around the Main Shaft*

The welded truss structure is one of the most important components of our design. It supports and transmits moment and forces caused by a 200 lb individual sitting on the seat through the entire mechanism. The truss structure is welded at the top and bottom to the individual hubs. One of the critical welds is in the front sleeve bearing housing connected to the truss structure as shown in Figure 16. However even at this critical joint, our welding analysis showed that we get a Factor of Safety equal to 8. Therefore this design allows the truss structure to be rigid yet be able to rotate about the main shaft furthermore it allows the seat to be placed in any orientation of choice.

The truss structure contains lots of welds which have to sustain high loads and moments, while not being too heavy to rotate around the main shaft, we chose to make the structure out of square steel tubing which gives us the advantage of being light but strong at the same time. From our analysis we found that the square tubing in the upper truss structure (Figure 19) is under tension whereas the longer square tubing is in compression. Therefore we chose the wall thickness of the upper truss structure to be 7 Gage (0.18 in.) and lower truss structure to be 11 Gage (0.12 in.). By convention, the Gage number decreases as the thickness of the square tubing increases. This has given us the ability to keep the structure strong and relatively light. We have a single steel link connecting the upper and lower truss structures. This feature was designed as a secondary safety measure (the first being the shaft collar) to incorporate rigidity in the mechanism by not allowing the structure to collapse once a load is applied on it. It also helps in assembly purposes once the upper and lower truss members are welded into place.

We will be welding two more components to the square tubing in the upper truss. The first component is a disconnected coupling joint while the other is the square stock that houses a sleeve bearing to allow the seat to rotate. There is a precision hole in the square stock for the sleeve bearing. This hole will have to be bored to precision only once the welding has been done.

The truss structure was designed as a right angled triangle ($45^o$-$90^o$- $45^o$), as shown in Figure 16. These angles were chosen as they were based on common conventions and would be easy to manipulate. For example, $\tan(45^o) = 1$, which would provide us with quick relations between the opposite and adjacent lengths in the right angled truss structure. The design of the angles of the truss structure was also optimized to give us maximum reach while maintaining rigidity in the structure. We also expect very minimal deflection in this structure due to the inherent design as well as the raw material choices.

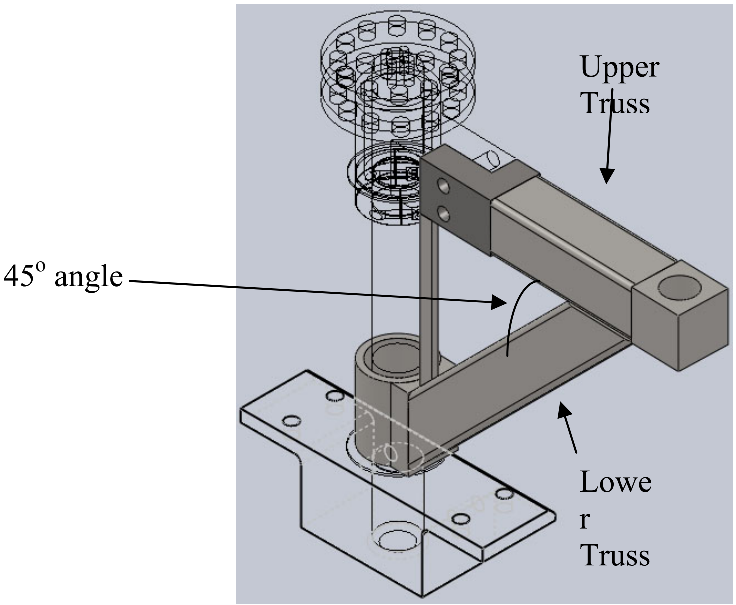

*Figure 16: Close up View of Truss*

*Seat Frame*

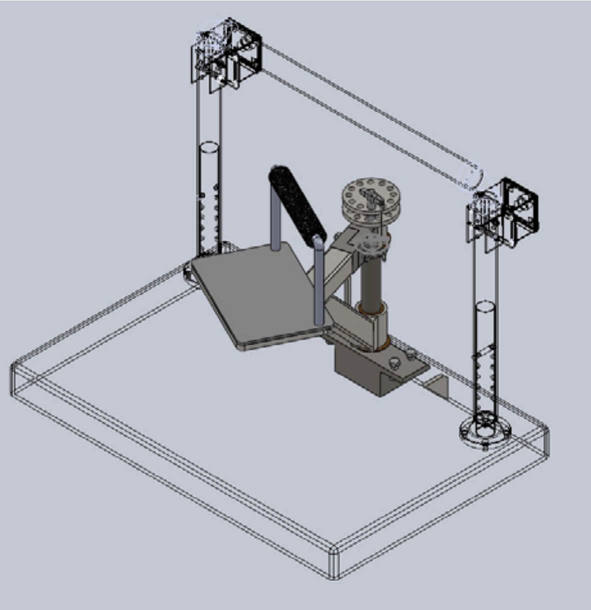

*Figure 17: Seat Frame Positioned at the edge of the Truss Structure*

The seat frame is a supporting base for the seat/cushion that we plan to attach for Dr.Muraszko to sit on. It is rigidly connected to a shaft via a weld allowing the entire frame to rotate about a sleeve bearing located in the upper truss structure.

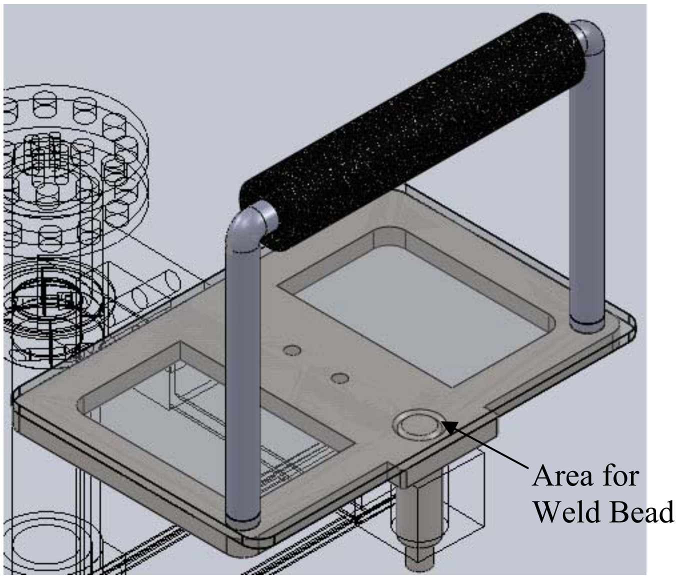

*Figure 18: Pockets in the Frame cut to save Weight*

This seat will be an 8” x 12” plate that will be waterjet cut in pockets to save on weight (Figure 18). This frame must be strong enough to resist deflection from a 200 lb individual sitting on it. We will be incorporating a back support in it too as it was one of the requests of Dr. Muraszko.

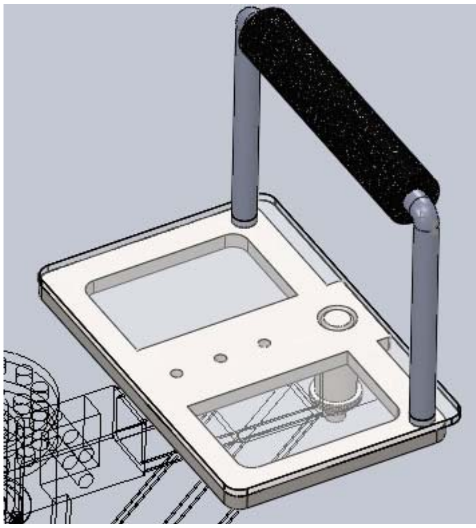

*Figure 19: Seat Frame with Back Support. Smoky colored plate is a fiberglass plate.*

The seat frame which is welded to a shaft will be rotating on the upper truss structure. This shaft will be pre-loaded with compression in order to eliminate joint play (Figure 20). The shaft is threaded at the bottom, which allows us to tighten a hex nut such that the thrust bearings in the assembly can come together with minimal play in joints.

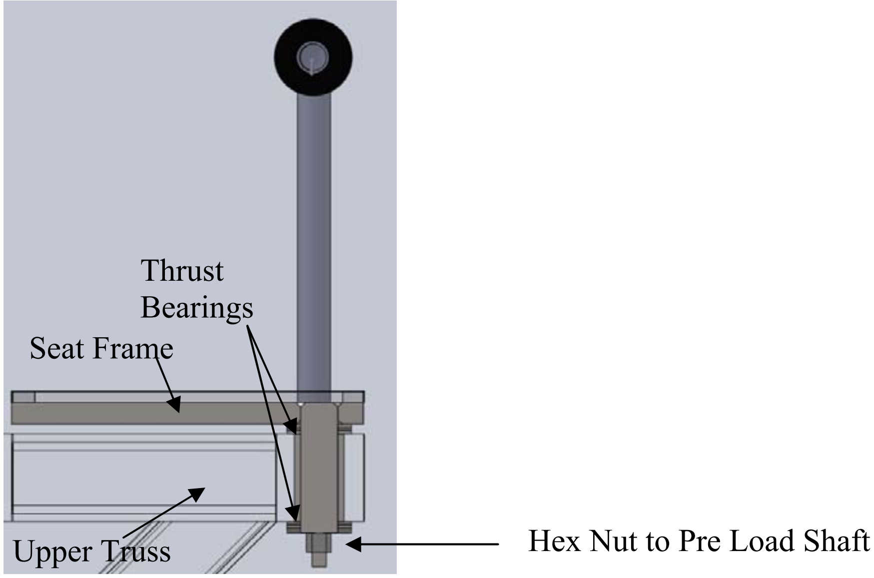

*Figure 20: Sectional View of the Seat frame*

**Engineering Design Parameter Analysis**

We utilized a combination of hand calculations and Finite Element Analysis (FEA) to ensure that our engineering parameters met the engineering specifications while providing a safe design for Dr. Muraszko. The hand calculations were convenient and provided an efficient method to determine the safety factors for the basic, elementary design concepts. These include the analysis of the overall truss structure and the bending moments in the shafts. The FEA assisted in providing the stress concentrations among the more complicated portions of our design. The FEA was useful in providing realistic stress estimations for the selection of the bearings in our design. This was necessary since the FEA produces the aggregate results from the combined effects and influences of all the components in the system. Hence, it mimics the true forces that would we in the mechanism.

Safety Factor

The choice of an acceptable factor of safety is important in any design. The safety factor is the yield or failure strength divided by the force being applied on the component. The higher factor of safety, the less likelihood the component will fail. In our case, the factor of safety generated for the different components expresses the required load, in terms of the design specification of 200 lbs that is necessary to cause either yield or failure on the component in question. Hence, we feel that a safety factor above 1.5 would represent a safe design when we place our project in perspective.

Our prototype is designed for and is to be used exclusively by Dr. Muraszko. She instructed us to design a seat which can support 200 lbs, as she may have other equipment attached to herself while operating. During most of the time she will not be using the full load carrying capacity of the seat at 200 lbs. Hence, a safety factor of 1.5 would mean that a force of at least 300 lbs would be necessary to initiate some sort of failure in the prototype. Therefore, we feel that such a large load is not possible, especially when we consider the environment in which the seat is to be used.

It is highly unlikely that the seat would experience violent and uncontrolled handling that might induce great forces on the seat itself.

## Free Body Diagrams

We simplified our seat design and performed hand calculations with the worst case scenario in mind. This included using a point load of 200 lbs rather than a distributed force over the area of the seat. This allows for a more conservative analysis of the system. As for the FEA, it allows us to perform a realistic examination of the performance of the system; hence we decided to use a distributed load for the FEA analysis. For our hand calculations, we used a simple truss structure as shown in Figure 21. A number of assumptions were also required to facilitate this analysis. They are listed below:

- 200 lb point load at edge of seat
- 2–D analysis of structure
- Weight of bearings, washers, bolts, nuts negligible
- Joints and beams are rigid
- Weight acts at geometric center of members

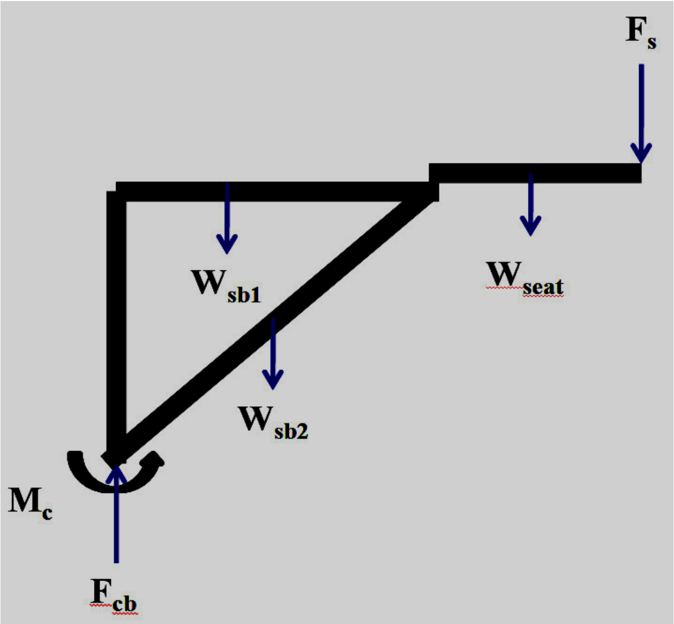

*Figure 21: Simple Truss Structure Approximation*

## Main Shaft

The 1.5” diameter main shaft is a vital component of the seat design since it supports the entire mechanism as well as the weight of the user. Thus we need to ensure that it does not fail as it can potentially cause serious injury if it fails. We identified the joint between the shaft and the base block as the most likely point of failure and analyzed the forces and stresses in that part of the shaft. We determined the maximum normal stress on the shaft using our hand calculations (Appendix F, G). We then referenced the material (AISI 1566 Steel) and determined the safety factor against yield for the shaft. We calculated a safety factor of 8.69 against yield. The shaft is case hardened; hence it has a high yield strength of approximately 99 350 psi [15]. The safety factor obtained is a reasonable value since it is not practically feasible for someone to apply approximately 2500 lbs to initiate yield of the shaft, unless the individual was jumping on the seat. If he or she does, other components will deform first.

We also felt that the deflection of the shaft would be an important factor for consideration. Therefore, we applied the deflection equations (Equations below) on the isolated shaft, with the appropriate force and bending moments acting at the free upper end. The calculation included the superposition of the deflection due to both the bending moment as well as the horizontal force present at the upper end of the main shaft. We also assumed that the base of the shaft is rigidly attached and calculated the deflection at the upper end (Appendix E). We calculated the deflection to be 0.145 in. This is a very small deflection and could probably only be lightly felt, if at all. In terms of safety, a deflection in the order of 1 tenth of an inch is unlikely to cause any major physical injury to the user.

$$\text{Deflection due to perpendicular force, } v = \frac{PL^3}{3EI}$$

$$\text{Deflection due to bending moment, } v = \frac{ML^2}{2EI}$$

Arm Joint Shaft

The second of the shafts under analysis is the 1.0” rod connecting the main and secondary arm, or arm joint shaft. It is located just below the seat frame and allows for rotation of the seat itself. This shaft also experiences bending moments. We again assumed the worst case scenario as a 200 lb point force at the edge of the seat in our analysis. We did a stress analysis calculation (Appendix G) for the arm joint shaft and obtained a safety factor of 6.43 against yield. This shaft is also case hardened with a yield strength of approximately 240 000 psi [16]. The extremely high yield strength allows the shaft to easily support the high stresses experienced in the arm joint shaft.

Buckling Analysis

The use of a truss structure (Figure 21) introduces the possibility of buckling taking place in the compression members. In our design, the angled truss is under compression when a load is applied on the seat and we need to ensure that buckling does not occur. From our free-body diagrams of the truss structure, we calculated that the force in the compressive member is 292.3 lbs. Using the material properties and geometrical parameters, we determined the minimum load that was required in the member (axially) before it buckles. We then used these values to determine the safety factor which was in the order of 1530. There is a high safety factor from which we can conclude that the angled truss beam will not buckle under the low load conditions. The detailed calculations are provided in Appendix G.

## Finite Element Analysis

We performed finite element analysis to double check our hand calculations and to also provide a more realistic representation of the performance of our design. The FEA encompasses all the basic parts in our design and analyzes the response of the system as a whole. Our hand calculations involved approximations such as point loads and 2-D analysis which may not be entirely representative of the overall mechanism. The FEA on the other hand has the capability to provide an accurate estimation of the actual performance of the system.

We utilized the FEA for two different purposes. A basic assembly was first used to analyze the performance of the basic geometries in the design. This assembly did not contain the bearings, nuts, washers or shaft collars and was used to ensure that the overall structure is rigid and offers us a desirable safety factor. We created factor of safety, stress and displacement plots in SolidWorks and are presented in Appendix G. The largest deflection is about 0.015 in and occurs at the edge of the seat frame, which is small and negligible. The maximum stress concentration occurs near the base of the main shaft as we had pinpointed and was in the order of ≈ 4,110 psi. This was lower than the result from our hand calculation which predicted a normal stress of 11, 454 psi. As discussed, this discrepancy is the result of using a very simplified and conservative model in our hand calculations. The lowest safety factor recorded in the FEA was 8. This provides a large amount of leeway when compared to our target safety factor of 1.5 and gives us confidence in the geometry and sizes of the components it the design.

The second purpose of the FEA was to predict the stress acting on the bearings. We created a second assembly with the bearings included. We were then able to run the same analysis again and extracted the stresses acting on the bearings. This allowed us to determine the loads on the bearings, which is vital in the selection of the bearings. The stresses extracted are shown in Appendix G, when the bearings are analyzed.

In addition, we had to apply certain assumptions to simplify our FEA analysis. The base platform was assumed to be rigid and was modeled as a fixed geometry. The bolts in the base block were modeled as rigid connections and therefore in effect, the block itself was assumed to be a rigid fixed connection. These simplifications were necessary to allow us to focus on the more important components of the design. The bolts were considered separately using hand calculations and the analysis is discussed in Appendix G. Finally, due to the limited material choices available in SolidWorks, we decided to use plain carbon steel for most of our components. In actual fact, we used hardened steel for the shafts in our design. Hence, we can expect the hardened steel to deliver a similar if not better performance than the plain carbon steel assumed in the FEA.

## Bearing Analysis

We have a total of 7 bearings in our design: 4 thrust bearings and 3 sleeve bearings. The locations of the bearings are shown in Figure 22, and the arm joint under the seat in Figure 23. Since this is a low revolution operation, we have focused on bearing failure due to extreme loads rather than extended operation. Hence, the bearing performance is influenced more by the static loads present rather than the number of revolutions.

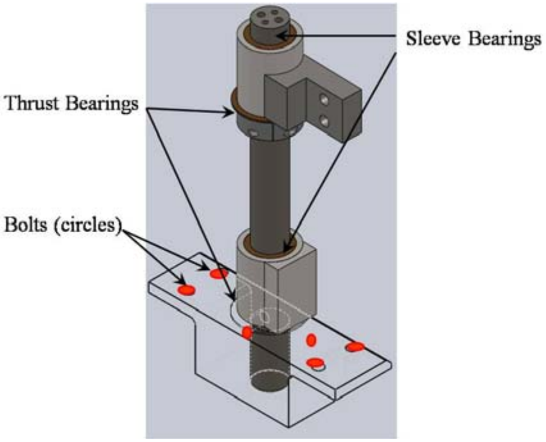

*Figure 22: Location of bearings and bolt holes in base block and main shaft*

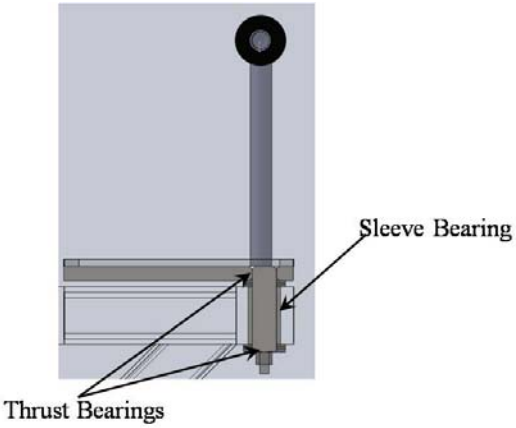

*Figure 23: Location of bearings in secondary shaft below seat*

We sourced the necessary bearings based on the dimensions required for our design. In order to determine if these bearings meet the load requirements of our design, we used the results from our FEA analysis for our bearing calculations. We chose the results from our FEA rather than those from the hand calculations. Our hand calculations dealt with a very simplified representation of the model. Hence, it involved ignoring the effects of external parts when analyzing a particular bearing. The loads on the bearings will however be greatly influenced by, for example the presence of a washer or another neighboring component. Hence, we extracted the stresses from our FEA using a sensor and probe tool in SolidWorks.

We had two different types of bearings in our mechanism-sleeve and thrust. They were both analyzed differently based on their functions. The sleeve bearings are designed to support radial loads in revolving shafts. The load ratings for the sleeve bearings were provided as maximum stresses on the inner race of the sleeve bearing. Therefore, we extracted the maximum stress value on the inner race of the sleeve bearing from our SolidWorks analysis and compared this value to the load rating of the sleeve bearing to generate the associated safety factors. The detailed calculations for this analysis are shown in Appendix G. The safety factors were all greater than 1, with the smallest factor of safety approximately 1.8, which provides a reasonable approximation the bearings will not fail if the seat is used within specifications.

The thrust bearings, on the other hand, are designed to support thrust or axial loads along the shaft. A basic thrust bearing load analysis could have been to assume that they support only the overall weight of the seat mechanism and use the total weight of our design as the load supported by these bearings. However, that would deviate from our strategy of including the effects of all the other components in the structure. Hence, we decide to extract the maximum stress value, on the face of the thrust bearing, from our FEA and multiply it by the bearing contact area to determine the maximum possible axial force on the bearing.

We were also hindered by the absence of the static load rating for the bearings that we sourced. Hence, we had to use the dynamics load values provided. Since the static load ratings are higher than the dynamic load ratings, it was a conservative estimate of the safety factors. The thrust loads were then compared it to the dynamic load ratings provided and the safety factors were determined. The lowest safety factor was approximately 22, which is to be expected in the cast of thrust bearings as they are designed to withstand considerable axial loads. The detailed calculations for the analysis are shown in Appendix G.

## Bolt Analysis

We decided to use six bolts to fix the base block to the lift platform. Two of the bolts are horizontally attached and four are vertically attached as shown in Figure 22 marked as red dots. The design of the bolt placement was decided such that the four vertical bolts would support the structure as a whole. However, this would allow binding between the side of the lift platform and the base block if it not bolted flush against the flange emanating from the side of the lift platform. In order to solve this problem, we decided to locate an additional two horizontal bolts whose sole purpose is to prevent the lateral movement of the base block away from the side of the lift platform. This is important since we modeled the base block as a fixed geometry in our analyses and hence, we would need to ensure that it is rigid and stable in order to obtain the expected performance from our design.

The analyses for the vertical bolts was conducted by analyzing the effects of the bending moment, axial and shear forces and calculating the principal stresses at the bolts. The horizontal bolt however, would fail mainly through shear; hence the shear force was considered. The results for these analyses are shown in Appendix G.

## Base Support Block and Main Shaft Connection Analysis

This sub assembly is the most crucial component in our design, as it is the foundation of our seat design. Therefore, we had to design this component to handle large loadings. We chose a 3in. x 3in. x 10in. block that will have a 1.5 in shaft that is press fit into it. We calculated the interference fit based on the table listed in the Machinery's Handbook [17]. We then applied the least material and maximum material conditions to the shaft to determine the hole size$1.500^{-0.002}_{-0.003}$. The press fit calculation showed that this press operation requires a 4.6 Ton as described in Appendix G. The shaft and the block will be welded together once the shaft is pressed in to ensure the connection is rigid. Based on how the subassembly is being put together, we feel this component will have sufficient strength to handle the forces being applied.

## Welding Analysis

The weld joint at the arm joint and truss structure was analyzed as it is the weakest link in the seat mechanism. Welding calculations are performed to determine the shear stresses and safety factors on the joint and can be found in Appendix G.

## Why It Will Work

### *Strong truss structure*

The design concept encompasses a truss structure in the swing arm. A triangular truss structure reduces the load on the main horizontal arm and instead adds a compressive load to the angled member. The truss structure is also more rigid as compared to a single horizontal arm without any vertical supporting features.

The initial concept during brainstorming was to duplicate the upper arm and use a horizontal arm emanating from the lower hub assembly. It would then connect to the arm joint via another vertical member. The downside to this design is that the arm connected to the lower hub would have to support the bending moment from the load as well. Using an angled truss will introduce a member in compression and also reduces the stresses on the upper arm.

### *Compact Design*

The design is also compact and can stow away with a minimum area covered. The swivel joint at the seat allows one to rotate the seat such that it is supported above the upper arm and hence reduces the total stretched length of the seat structure. We can then rotate the seat about the main shaft and store it parallel, in line with the lean bar. The locking mechanism can then be initiated and the seat would then be fixed in the stowaway position. This ensures that the seat will not swing out and interfere with Dr. Muraszko during the operation.

### *Customer Satisfaction (Dr. Muraszko likes the concept)*

We discussed the concept with our customer Dr. Muraszko and showed her a mock up model of the final concept (Figure 24). Dr. Muraszko liked the easy deployment capabilities of the seat as well as the fact that it can reach all over the lift platform. She also suggested that we try to implement a basic back support on the seat as it would assist her greatly by improving the comfort levels. She liked the concept of the swing arm and the idea of locking positions for the seat at different angles.

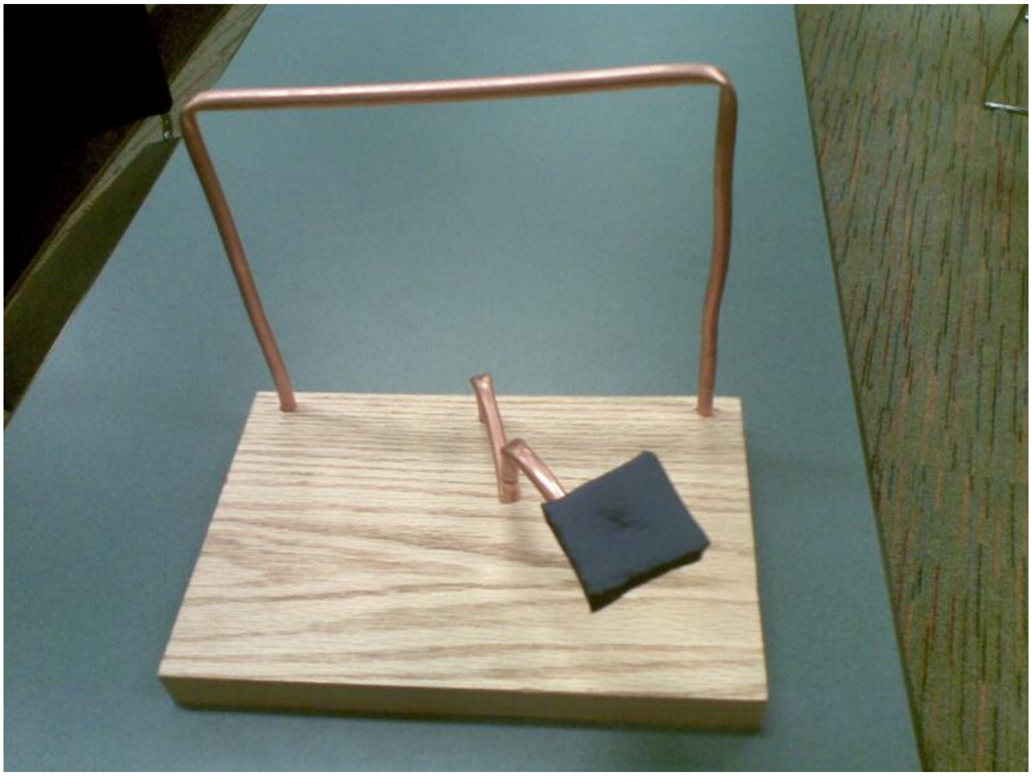

*Figure 24: 1:6 scaled mock up to show concept to Dr. Muraszko*

## Prototype Application

At the beginning of the semester, our task was to design the seat ourselves and outsource the manufacturing of the seat for Dr. Muraszko's Lift. We were to build a seat that would be hospital ready complete with stainless steel and safety precautions. This would be a working model of the seat and not a prototype.

The seat mock up that we manufactured in the machine shop is merely a concept demonstrator and not a hospital ready seat for Dr. Muraszko to use on an everyday basis. She will have to first try the seat and test the design to confirm whether or not it satisfies her requirements. Once Dr. Muraszko has tested the design, modifications will be made as required and then a hospital ready seat will be manufactured for her permanent use in the operating room.

Summarizing, the prototype in our case will be the seat mock up we will be fabricating in the machine shop for Dr. Muraszko to approve whereas the final design will be the seat manufactured by an external manufacturer if Dr. Muraszko approves of it.

## FABRICATION PLAN

### Manufacturing Plan

After designing our components, we completed engineering drawings to aid us in the manufacturing process. Engineering drawings give dimensions and sizes of parts to be made, minimizing mistakes which could lead to waste of material. All the engineering drawings are Geometric, Dimension & Tolerance compliant, complete with weld symbols for components which are to be welded. The engineering drawings are included in Appendix H.

Before we start manufacturing, manufacturing plans have to be made in advance (Appendix I). Manufacturing plans contain vital machining information, like steps and procedures to manufacture the component, as well as the speeds and feeds of mills and lathes. With manufacturing plans, we can utilize the machine shop time efficiently, as there are a limited number of machines. Additionally, machine shop time is limited due to the number of teams and shop hours.

On top of manufacturing plans, welding plans (Appendix L) have to be created to ensure we minimize warpage, which is a deformation of the components through extreme heating. Warpage could make assembly difficult and introduce unwanted binding or clearances into the assembly. Hence, it is important to create and follow a welding plan. The welding plan accounts for any important considerations and creates a methodological process to create the welds.

The x50 machine shop has mills, lathes, presses and other equipments which we will need for our manufacturing needs. In addition, the machine shop provides MiG Welding (Gas Metal Arc Welding) and TiG Welding (Gas Tungsten Arc Welding) for our welding needs. Most of the welding will be done by the machine shop staff due to our limited experience in welding.

### Assembly Plan

An assembly plan helps eliminate most errors and expedites assembly; as well anticipate safety issues that may arise (Appendix K). There will be two separate components to the assembling of our surgery lift prototype- seat and lift. We assembled the seat in the x50 machine shop and then integrated it into the lift at *Protomatic.*

## ENGINEERING CHANGES

After developing our manufacturing and assembly, we proceeded to manufacture our seat structure in the machine shop. However, there were a few instances where we had to redevelop our design in order to achieve the desired outcome. Most of these changes were enforced due to intricacies that arose during the manufacturing process. The changes are presented as formal documentation in Appendix M.

## VALIDATION PLAN

The plan at the beginning of the semester was for us to design the seat and put together drawings for *Protomatic* to manufacture the entire assembly. During the semester, the scope changed such that we will manufacture the seat mock up in the x50 Machine shop whereas *Protomatic* will be manufacturing the lift assembly without the seat. Therefore, to validate the lift and seat, we will have separate procedures.

### Validation of the Lift

The previous ME 450 team worked on the design of the Lift and lean bar assembly. They were in direct contact with Dr. Muraszko regarding the lift and her requirements on the same. Hence, we will be validating the lift in terms of only making sure that the lift movement can be controlled properly and that the base and platform are sturdy enough to hold the weight of the seat. The lean bar assembly can be validated by making an individual lean on it while the lift is extended to check for how stable he/she 'feels'. These will be qualitative tests only.

### Validation of the Seat Mock Up

We put forth engineering specifications based on customer requirements after meeting with Dr. Muraszko the first time. Based on these specifications we generated our concepts and arrived at a final design. Now, after manufacturing this design we will need to compare with the initial specifications to check whether or not we have achieved our targets. The engineering specifications that we plan to test are shown in Table 7. Following the table, we have detailed description of the engineering specifications and their significance in meeting the customer requirements. The step-by step experiments we plan to perform to validate these design are described in Appendix N.

Play in Joints: Play in joints was one of the primary concerns while designing this mechanism. The amount of play determines how stable and sturdy Dr. Muraszko will feel when sitting on the seat. Deflection in the truss structure, platform and front shaft will play an important role in determining overall play. The greater the range of play, the more unstable Dr. Muraszko feels on the seat. We can test the deflection in the truss structure and seat frame by placing a dial gauge in a reference frame and then make a 200 lb individual sit on the seat. This will give us an idea as to how much deflection will be there.

Time and Steps to Deployment: One of the primary complaints of Dr. Muraszko was that there aren't many nurses who are available in the operating Room to help her deploy the seat due to the fact that the seat was quite heavy and required the operator to lift the seat in the deployment process. Hence she wanted the seat to be easily deployable preferably by a single person. When the manufacturing is complete we will test the mechanism to see how many steps it would take to deploy the mechanism. We can also use a stopwatch to record the average time over many repetitions. This is a simple experiment with simple apparatus.

*Table 7: Validation table summarizing engineering specifications and methods*

| Engineering Specifications | Test Method |
|---|---|
| Time to Deployment | Measure using a stopwatch over 5-8 trials and take average. |
| Steps to Deployment | Count minimum steps to deployment from initial state without seat attached |
| Play in Joints | Use dial gauge in a reference frame and place weights on the seat frame |
| Comfort Rating of Cushion | Compare new seat cushion and previous seat cushion based on a scale of 1-10 |
| Horizontal Travel Distance | Use tape to measure seat in outstretched position |
| Maximum Weight Supported | Have an individual just over 200 lbs (200 – 225 lbs) as a precautionary check |
| % of Stowaway Area on Platform | Use tape measure to measure footprint of seat on the lift and scale it as a% based on the platform dimensions |
| Gaps in Welds | Check welds to ensure there are no gaps (gaps were checked during the welding process; proper techniques such as tack welding and preheating were performed during manufacturing) |
| Weight of the Mechanism | Use a scale to measure weight of entire seat structure |
| Reach of the seat as a percentage | $\textit{Reach (\%)} = \frac{\text{Area of Platform Covered by Swing Arm}}{\text{Total Area of Platform}} \times 100$<br>Area of platform covered = circular sector covered by truss structure and seat |

Stowaway Area: Stowaway area is the area that the collapsed seat mechanism occupies as a percentage of the area of the lift platform (2 ft x 3 ft). This is a simple calculation and measurement. All we need is a tape measure to measure the dimensions of the top view of the seat mock up. As part of Dr. Muraszko's requests, she wishes the stowaway area should be as minimum as possible as she desires all the space on the lift platform.

$$\textit{Stowaway Area (\%)} = \frac{\text{Area of Platform occupied in top view}}{\text{Total Area of Platform}} \times 100$$

Reach of the Design: The reach of the seat design is the percentage area of the platform that the seat is able to cover. Since our design is that of a seat frame swiveling about a single swing arm, there is a huge area of coverage. This was a desirable feature on Dr. Muraszko's part as she is looking forward to the fact that there are more than just a couple of positions for her to be seated in.

$$Reach\ (\%) = \frac{\text{Area of Platform Covered by Swing Arm}}{\text{Total Area of Platform}} \text{ x } 100$$

Weight of the Seat: We have an inventory of the size of all material purchased - finished goods as well as raw material. Weight of these materials can be easily summed to find the total weight of the mechanism. Alternatively, we could weigh the entire mechanism after it has been assembled. This might turn out to be a cumbersome process as we may have to walk around with a seat which could potentially weigh over 40 lbs.

Comfort Rating of Cushion: After final assembly we will request Dr. Muraszko to rate (between 1 & 10) and compare the former seat and the newly designed seat to gauge what the comfort of the cushion is.

Horizontal Travel Distance: The new design of the seat uses a single swing arm connected to a seat frame link. With this configuration we will be able to achieve a large number of seating arrangements on the platform. When the seat is in its outstretched position with both the arms pointing outward, the horizontal distance travelled is the maximum one. We can easily measure this dimension with a tape measure once the assembly is completed.

Maximum Weight Supported: Based on Dr. Muraszko's requests, we are building this lift for a person weighing 200 lb. As a safety precaution, we can make an individual weighing just over 200 lb sit on the seat to see how the mechanism will cope.

Material: The material used in this mock up is governed by the fact that our sponsor Dr. Shih instructed us to use steel only in construction.

Gaps in Welds: Over the course of the semester, our scope changed from *Protomatic* manufacturing the seat to manufacturing the seat mock up in-house. Also, our sponsor told us that the seat mock up will not need to be hospital ready. Therefore, the gaps in welds although not desirable, need not be ground down to a fine finish like *Protomatic* was supposed to.

## Prototype Testing

We performed our validation of the prototype at *Protomatic's* facility. The most crucial validation experiment we had to perform was the dead weight or load testing of the mechanism. We decided to measure the deflection of the seat, at the edge of the seat, and the deflection of the main shaft, at the upper hub, using a pair of dial indicators. The dial indicators output a deflection measurement in inches with a resolution of 0.0005. The location of the dial indicators and the experimental setup is shown in Figure 25.

We loaded the seat up to 250 lbs. The reason for stopping at 250 lbs was due to the relatively large deflection of 0.42 in measured at the edge of the seat. Therefore, we wanted to exercise caution and not foray into the region of plastic deformation of any parts in the seat structure. Moreover, we noticed that the platform was deflecting, and hence we felt any more rigorous loading of the seat may not be safe.

We plotted the loading results for the deflection of the seat and the main shaft, each against the weight used, as is shown in Figure 26. We observed the deflection increases with weight linearly. The linear trend may suggest that the components of the seat may be deforming elastically, however, we could not ascertain the fact since the deflection of the lift platform could have contributed to the seat deflection as well. The lift platform was modeled as rigid support in our analysis and a more realistic treatment of the base could have produced more compelling results. In any case, the testing showed that the lift and the seat can support the design criterion of 200 lbs as requested by Dr. Muraszko.

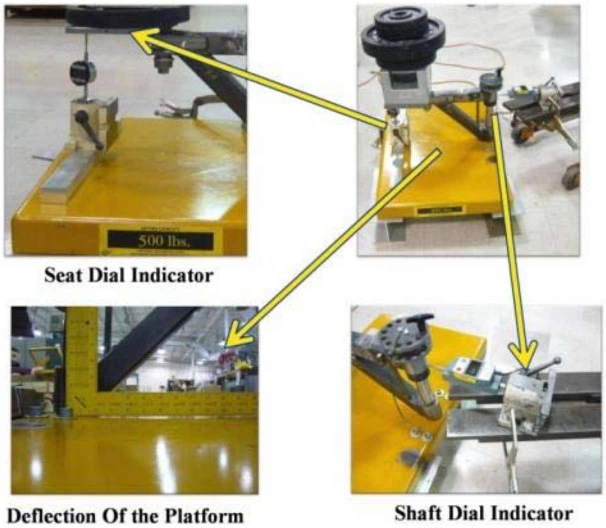

**Seat Dial Indicator**

**Deflection Of the Platform**

**Shaft Dial Indicator**

Figure 25: Shows the setup used in testing the seat structure.

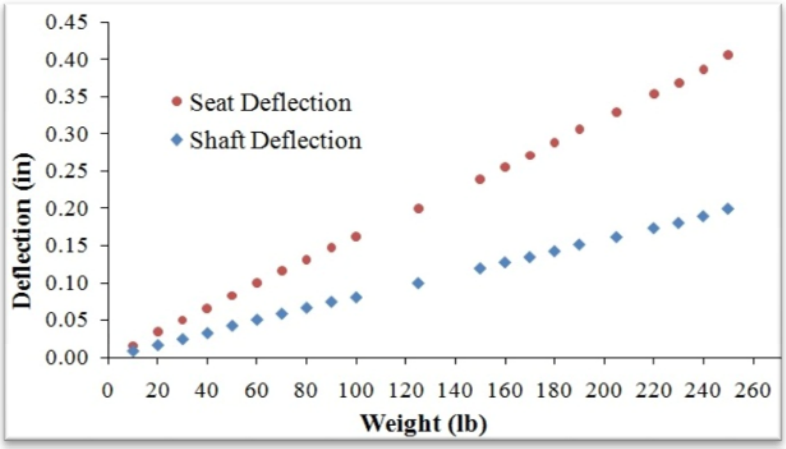

Figure 26: Plot of deflection against weight for the seat and shaft deflection shows deflection increases linearly with loaded weight

## Results of Validation

After testing and validation were done, the results were tabulated and rechecked with initial targets. The following table shows that most of the engineering specifications were achieved.

*Table 8:Summary of results from validation*

| Customer Specification | Engineering Specifications | Initial Target | Result | Target Achieved (Yes/No) |
|---|---|---|---|---|
| Quick to Deploy | Time to Deployment | < 10 s | 30 s | No |
| Easy to Deploy | Steps to Deployment | ≤ 4 steps | 4 steps | Yes |
| Sturdy | Play in Joints | ~ 0 in. | ~ 0.01 in. | Yes |
| Comfortable | Comfort Rating of Cushion | 10 | TBD | TBD |
| Horizontal Adjustment | Horizontal Travel Distance | 8 in. | 20 in. | Yes |
| Support 200 lb individual | Maximum Weight Supported | 300 lb. | 250 lb. | No |
| Hides Away | % of Stowaway Area on Platform | 10 % | 9 % | Yes |
| Safe | Material | Steel | Steel | Yes |
| Can be Sterilized | Gaps in Welds | ~ 0” | Some | No |
| Light | Weight of the Seat | 40 lbs | 55 lbs | No |
| Maximum Reach of Seat Support | Reach of the seat as a % | 50 % | 70% | Yes |

The following section is a detailed explanation of the translated customer requirements and how the requirements were met, or, if not met, is acceptable for the time being.

**Time and Steps to Deployment:** One of the primary complaints of Dr. Muraszko was that the previous seat required 2 non-sterilized personnel several minutes and many steps to deploy the seat, which puts a strain on the operating staff as there are limited non-sterilized personnel. Hence she wanted the seat to be easily deployable preferably by a single person.

In our seat design, the seat can easily be deployed by single non-sterilized personnel in 4 steps due to the swing arm design. Unfortunately, we weren’t able to meet the target of deploying the seat in less than 10 seconds. This was due to a number of locking pins which secures the arm and seat in position. However, 30 seconds was a significant improvement of deployment time, therefore there will not be any changes to this specification.

**Play in Joints:** Play in joints was one of the primary concerns while designing this mechanism. The amount of play determines how stable and sturdy Dr. Muraszko will feel when sitting on the seat. Deflection in the truss structure and shaft will play an important role in determining play in joints. The larger the deflection, the more unstable Dr. Muraszko feels on the seat.

From testing, we determined that the tip seat had a maximum deflection of 0.43 in. with 250 lb loading. Most of the deflection was a result of the platform deflecting, with minimal deflection in the truss structure and no play joints once loaded.

**Comfort Rating of Cushion:** After final assembly, the comfort rating of the seat will be rated between 1 and 10. In addition, we will request Dr. Muraszko to rate the newly designed seat to gauge what the comfort of the cushion is; therefore the final value is to be determined.

**Horizontal Travel Distance:** The seat design uses a single swing arm connected to a seat frame link. With this configuration we will be able to achieve large number of seating arrangements on the platform. When the seat is in its outstretched position with both the arms pointing outward to the front of the lift, the value of horizontal travel distance is at a maximum.

With the seat attached to the structure, we measured the maximum length of this dimension, which was about 20 in. long. This is more than double the initial target. In addition, the forward tip of the seat sits 3 in. inside the edge of the lift, giving Dr Muraszko more flexibility in adjusting her forward lean.

**Maximum Weight Supported:** Based on Dr. Muraszko's requests, we are building this lift for a person weighing about 200 lb. To determine if the seat will support this weight, we placed weights on the seat incrementally. We tested up to 250 lb. and the seat had 0.43 inch deflection, which met and surpassed our initial target. We did not test past 250 lb. as we were not testing for failure.

**Stowaway Area:** Stowaway area is the area that the collapsed seat mechanism occupies as a percentage of the area of the lift platform (24 in. x 36 in.). This is a simple calculation and measurement. All we need is a tape measure to measure the dimensions of the top view of the seat mock up. As part of Dr. Muraszko's requests, she wishes the stowaway area should be as minimum as possible as she desires all the space on the lift platform.

$$\textit{Stowaway Area (\%)} = \frac{\text{Area of Platform occupied in top view}}{\text{Total Area of Platform}} \text{ x } 100$$

From our testing, we determined the total stowaway area to be about 9%, which meets our engineering specifications. This value was obtained with the assumption that the seat was removed and stored separately.

**Material:** Our sponsor Dr. Shih instructed us to use steel only in the manufacturing of our prototype. We met his specifications by building the main structure out of steel.

**Gaps in Welds:** Gaps in welds are undesirable in medical equipments as the gaps will accumulate dirt and bacteria, which reduces the cleanliness of the operating room. However, our prototype is a mock up of the future seat that will be built; therefore gaps in welds will acceptable.

**Weight of the Seat:** We have an inventory of the size of all material purchased- finished goods as well as raw material. Weight of these materials can be easily summed to find the total weight of the mechanism. Alternatively, we could weigh the seat after it has been assembled.

After manufacturing, we weighed a fully assembled seat, and determined the weight to be around 55 lb. This specification was exceeded due to the fact that both the main shaft and support blocked weighed 25 lb. in total. In future, weight of the support block could be reduced by removing excess material.

**Reach of the Design:** The reach of the seat design is the percentage area of the platform that the seat is able to cover. Since our design is that of a seat frame swiveling about a single swing arm, there is a huge area of coverage. This was a desirable feature on Dr. Muraszko's part as she is looking forward to the fact that there are more than just a couple of positions for her to be seated in.

$$Reach\ (\%) = \frac{\text{Area of Platform Covered by Swing Arm}}{\text{Total Area of Platform}} \text{ x } 100$$

After assembling the seat on the platform and measuring the reach of the seat, we determined the seat easily covers 70% of the platform, due to the fact that there are a large number of seat arrangements; this specification was met and surpassed.

## DESIGN CRITIQUES AND RECOMMENDATIONS

This seat mock up has served its purpose as a concept demonstrator. One of the highlights is the fact that the revolute joints in the structure have minimal play thus making the structure 'feel' sturdy. The other good aspect of this design is the rigidity of the truss structure when loaded.

While having a successful design there were nevertheless a few shortcomings; the main one being the platform deflection. In our Finite Element Analysis we calculated the greatest deflection of 0.0015 in for a 200 lb load on the seat; however in reality the deflection turned out to be 0.34 in. As the structure was loaded we discovered that the platform itself deformed and caused the angle at which the seat is mounted at to change. From our engineering judgment the seat is safe to load 200 lbs; however the seat should not be operated above this without further analysis and development of the platform.

A possible recommendation for improving the rigidity of the platform is to reinforce the underside of the platform with ribs or gussets to help minimize deflection. The ribs would force the platform to remain horizontal by taking some of the stress off the 0.25" thick lift platform. This would reduce any deflections in the seat that are induced by the bending of the lift platform.

The locking mechanism at the top of the truss structure also needs improvement; one of things to improve would be the tolerances between the crowns and the locking pin. The holes in the locking crowns were manufactured to have a dimension of 0.55 in. This was done to simplify the locking of the seat in the in the concept demonstrator. The less stringent tolerances created a gap between the holes and the locking pin which leads to a loose clearance fit. The current locking mechanism calls for a balance between usability and sturdiness. This is why we recommend redesigning the locking mechanism to achieve a balance between the two criterions.

The seat cushion placement can also be improved to facilitate quick deployment. Currently it takes a minimum of 3 steps to deploy the seat cushion. We feel that a quick latching mechanism can be developed that is more smooth and user friendly.

The weight of the seat mechanism could be improved; it currently weighs in at about 55 lbs. however we feel that it can be brought down to approximately 40lb. It was designed to have a large safety factor which was achieved by making components out of thick metal. With further detail analysis of each component this weight can be cut down without sacrificing safety. The weight can be further reduced by exploring alternative materials to manufacture the truss structure.

Finally, alternative lift mechanisms can also be sourced. This would be a very practical and straightforward method to improve the stability of the lift. We could purchase lifts that have a more rigid scissor mechanism with supporting struts to guide the horizontal and vertical motion of the scissor mechanism. This could help reduce any deflection in the lift when the platform is raised and provide extra stability for Dr. Muraszko.

## INFORMATION SOURCES

### Sterilization Methods

One of the issues brought up during the interview with Ms.Yvonne Bellairs, Dr. Muraszko's personal assistant, was the nature of the sterilization process for surgical equipment. Ms. Bellairs stated that the Neurosurgery Department personnel use a particular disinfectant, *Virex* (Figure 10), by Johnson Diversey, to sterilize the surgical equipment before they are brought in to the operating room. The surgical lift is sterilized using *Virex* before being draped using a standard surgical cloth. From our research, *Virex* is designed specifically for health care facilities and is capable of exterminating a number of micro-organisms, including Tuberculosis, MSRA, VRE, MRSE, HBV and HIV-1 [10]. *Virex* is also an OSHA complaint product and meets the blood-borne pathogen standards for HBV and HIV [10].

More importantly, *Virex* can be used to disinfect hard, non-porous and inanimate surfaces [10]. It is safe enough to be used on kitchen appliances as well; hence stainless steel parts in the surgical lift can also be safely sterilized using *Virex* without the fear of corrosion [10]. However, a point of consideration is that *Virex* is not intended for use on porous materials such as foam. Thus, it is imperative that we seek an alternative to the current foam seat cushion that was used on the previous ME 450 team's surgical lift. The possible materials for the seat are discussed in the following section.

Figure 27: Virex disinfectant used to sterlize surgical equipment

## Seat Cushion Material

Ms. Yvonne Bellairs, who is also Dr. Muraszko's head nurse in the operating room, specifically mentioned during our interview that she would prefer a vinyl covered seat (Appendix A). This would ensure that the seat is easy to clean. PVC, or polyvinylchloride, is a possible solution as it is resistance to chemical stress cracking and can be easily sterilized using methods such as steam, radiation or ethylene oxide [11]. PVC seats also provide a smooth finish and can be used with the disinfectant *Virex.* Another commonly used seat material is leather. The SurgiLine and SurgiTrend model of surgical chairs use seats with fine calf leather grain upholstery material which also provides a matte gloss effect. This type of leather is abrasion-resistant, easy to clean and safe for disinfectant use [12]. We would most likely be pursuing a PVC seat as it is much more commonly used in seat designs and a ready-made seat can easily be sourced externally, leaving us to focus on the seat mechanism itself.

## Seat Cushion Design

Another topic of discussion is the seat cushion design. The surgical lift designed by the previous ME 450 team (Fall 08) [2] utilizes a square cushion that complements that particular seat mechanism. However, we have learnt from Ms. Bellairs that Dr. Muraszko would not be averse to other seat designs such as a round or saddle type seat (Figure 28). A saddle type seat is known to have numerous health benefits. For example, a saddle seat would strengthen the back and improves the posture, while promoting blood circulation in the lower body, reducing any foot swelling [13]. In a longitudinal study conducted at the University of Birmingham, England, the sitting posture of a group of dental students was analyzed with both conventional and saddle seats [14]. The results showed that there was an improvement in seating posture for the students using the saddle seat as opposed to the conventional seat. Hence, we feel that a saddle seat could offer great ergonomics benefits to the user and should be implemented in our design if possible. We also considered using a round seat (Figure 29) as it offers a comparable amount of comfort as the conventional seat but has a smaller surface are and overall mechanism weight.


Figure 28: A saddle seat forces user to adopt a more ergonomic and improved body posture


Figure 29: Example of round seat to be used in Alpha design

## SPECIAL CHALLENGES TO OUR PROJECT

### Change of Manufacturing Plans – Outsource to In-House

We were initially instructed to outsource the manufacturing of the entire lift mechanism and the seat to *Protomatic*; however, our sponsor modified the scope and required our team to fabricate the seat in the x50 machine shop. The lift will still be manufactured by *Protomatic*.

When the change of scope was introduced, we already had a final design and were ready to start on engineering drawings. The design incorporated an elaborate locking mechanism specifically for the seat, as well as several complicated designs which requires *Protomatic*'s manufacturing capabilities. This required us to change the task on hand to redesign the complicated concept to a simpler design that we are able to manufacture in the machine shop.

### Welding structural members

The design we decided to proceed with requires us to do significant amount of welding. However, our team does not have much welding experience. We have to specially account for weight holding structures, as a weak weld will cause the structure to yield or fracture, making the seat unsafe to use.

To overcome this challenge, we consulted several professors to help us acquire in depth knowledge about welding. We consulted Professor Kannatey-Asibu to get more knowledge on this subject, as well as refer to mechanical books to calculate stresses and strengths in welds. Also, we are planning to consult Bob and Marv, the two machinists at the x50 shop, frequently when welding.

### Limited resource in the machine shop

In our design, we have several components that require special equipment to manufacture. As the x50 has only has the more general equipment, we will have to find an alternative method to manufacture these components.

The most challenging part during assembly is to press in the hardened shaft as the shaft is almost 2 feet tall, and the largest press in the x50 machine shop has a jaw opening of only 1.5 feet. In addition, we calculated that we require about 4.6 tons to press the shaft into the block. After some enquiries, we discovered there were presses which fit our requirements located in the graduate machine shop.

## SUMMARY AND CONCLUSION

Over the duration of the semester, the scope of our project was modified such that we were to fabricate the seat in the MEx50 machine shop and *Protomatic* to manufacture the lift assembly and lean bar. Dr. Muraszko would be providing her feedback on the seat after which any necessary modification would be made before an external manufacture fabricates a hospital ready seat made of stainless steel.

Our final product has undergone a great deal of development from the alpha design stage. We retained the concept of the alpha design and incorporated various mechanical components and fabrication and assembly techniques that would help us produce an unblemished final product. We performed engineering analyses on the seat assembly to ensure that the seat would meet safety requirements while satisfying our customer requirements. Specifically, we focused on the shortcomings of the previous seat design and worked towards providing a more functional and versatile seat for Dr. Muraszko. In the process, we had to consult Dr. Muraszko and our sponsor, Dr. Albert Shih, to ensure our product meets all the customer requirements. Dr. Muraszko would be evaluating the finished product in the coming weeks and if satisfactory, a new seat would be manufactured based off our design. This seat would be made of stainless steel in order to meet hospital safety requirements and be categorized as a Class I device.

Our final seat is made of standard steel in the machine shop. It is designed for a 200 lb individual as per Dr. Muraszko's request. From our engineering analyses, we determined safety factors against yield and found that we have adequate safety factors (smallest being 1.8) on all the bearings, bolts, structural members and shafts. We believe the mechanism will be sturdy enough to support Dr. Muraszko's weight and will not fail in service. However this is merely a concept demonstrator and we do not recommend integrating it into the lift assembly without analysis on the platform. We have used a Bill of Materials to document all the components present in our seat assembly and have recorded our manufacturing and assembly plans in detail to facilitate reproduction of our design. We hope the seat and lift assembly helps Dr. Muraszko performs her surgeries in greater comfort and stability.

## ACKNOWLEDGEMENTS

We would like to thank all those who have helped us one way or another. Firstly, we would like to extend our gratitude to Dr. Karin Muraszko and Dr. Albert Shih for giving us the opportunity to work on the Surgical Lift project. We would also like to thank our section instructor, Professor Alan Wineman, our ME 450 instructor, Professor Gordon Kraus and Graduate Student Instructor Phillip Bonkoski for providing guidance and support throughout through the term. Further sources of valuable assistance were PhD. student Steven White, who will be undertaking the project after we leave and our manufacturer, *Protomatic*, who granted access to their facilities and expertise in order to help us develop an exceptional product. We are also grateful to the Mechanical Engineering Department staff, particularly Bob Coury and Marv Cressey from the ME x50 Machine Shop and Steve Erskine in the Engineering Research Centre for assisting us in manufacturing our prototype. Dr. Muraszko's staff at the hospital, Ms. Yvonne Bellairs and Mr. Dennis Fish have helped us greatly by facilitating our interactions with the doctor herself. Finally we would like to express our thanks to the Fall 2008 ME 450 Neurosurgery Team who provided us with tips and strategies for success.

## REFERENCES

[1] Britton, C., Frankini, T., Friedt, N., & O'Leary, P. (2008, April 15). *Final Report - Surgical Power Lift*. Retrieved from http://hdl.handle.net/2027.42/58686

[2] Anderson, D., Davis, P., Savage, L., & Skowronska, M. (2008, December 9). *Final Report - Surgical Lift Project for Dr. Muraszko*. Retrieved from http://hdl.handle.net/2027.42/61918

[3] Muraszko, K., Dr. (2009, January). Harder Than Brain Surgery [Video file]. Retrieved from http://michigantoday.umich.edu/2009/01/story.php?id=7378

[4] SurgiLine & SurgiTrend. (n.d.). [Brochure]. Retrieved from http://www.ufsk-osys.com/download/ surgiline_en.pdf

[5] Garber, W. W. (1973). *U.S. Patent No. 3,754,787*. Washington, DC: U.S. Patent and Trademark Office.

[6] Bergsten, J. D., & Bergsten, D. A. (1997). *U.S. Patent No. 5,597,207*. Washington, DC: U.S. Patent and Trademark Office.

[7] El-Haik, B. S., PhD., & Mekki, K. S. (2008). 2.3 Medical Device Classification. In *Medical Device Design for Six Sigma* (pp. 28-29). United States of America: Wiley-Interscience.

[8] Solvay Chemicals: Materials of Construction for the Storage of Hydrogen peroxide. http://www.solvaychemicals.us/static/wma/pdf/6/6/0/4/HH-2323.pdf

[9] SOMA technology: Nuvo Volante Surgical Table www.somatechnology.com/https://ctools.umich.edu/access/content/group/813d8133-4c5c-44b9-957e4497ce4ed83b/Design%20Review%203/Paper/Refrences/surgical_table.pdf

[10] Johnson Diversey. (2003). *Virex Tb Disinfectant Deodorizing Cleaner* [Brochure]. Retrieved from http://www.johnsondiversey.com/wcmt/ProductAttachments/en-US/PIS/SPC214.pdf

[11] Benefits of PVC. (n.d.). *PVC.org*. Retrieved February 13, 2010, from http://www.pvc.org/How-is-PVC-Used/PVC-for-Health/ Benefits-of-PVC

[12] SurgiLine & SurgiTrend. (n.d.). [Brochure]. Retrieved from http://www.ufsk-osys.com/download/ surgiline_en.pdf

[13] Back Designs Inc. (2010). Health benefits of saddle sitting. In *Back Designs Inc.* Retrieved February 13, 2010, from http://www.backdesigns.com/webpage.aspx?Webpage_ID=13&

[14] Gandavadi, A., Ramsay, J., & Burke, F. (2007, November 24). Assessment of Dental Student Posture in Two Seating Conditions using RULA methodology – A Pilot Study. *BRITISH DENTAL JOURNAL, 203*(10), 601-605. doi:10.1038/bdj.2007.1047

[15] Interlloy. (n.d.). *X4317 Case Hardening Steel* [Data file]. Retrieved from http://www.interlloy.com.au/data_sheets/case_hardening_steels/4317.html

[16] Guo, Y. B., & Liu, C. R. (2002, February). *Mechanical Properties of Hardened AISI 52100 Steel in Hard Machining Processes*. doi:10.1115/1.1413775

[17] Oberg, E., Jones F.D., Horton H.L., Ryffell, H.H., "Machinery's Handbook", 26th Edition, 2000, Industrial Press

[18] Budynas, & Nisbett. (2006). *Shigley's Mechanical Engineering Design* (8th ed.). United States of America: McGraw Hill.

## APPENDIX A

## Questions & responses for our meeting with Ms. Bellairs on February 3, 2010

1. *What is the primary purpose of the seat? Will it be used while operating or is it for Dr. Muraszko to rest on?*
   **It is meant to be used while operating: both in the case of the lift and the seat. She is also known to lean behind on the lean bar now and then (while resting).**

2. *Regarding the arm supports, again is it to be used while operating or will it be a support while standing?*
   **Arm supports needed while operating in seated position; they will need to swing/clear away when Dr. Muraszko needs to stand up and operate. It will not be used while standing.**

3. *Can we use one more side to mount the collapsible seat mechanism on the side? Or are all sides on the platform required to be open? We will provide Dr. Muraszko with a step to get on.*
   **During operations, the front portion of the lift is usually flush against the surgical bed. The top of the lift platform does not slide beneath the bed. Hence, only the two sides can be used to enter/leave the lift.**

   **She wears a leg brace on left leg; hence she gets up through the left side of lift( viewed from behind). Logically it will be easier for her, since she can use the lean bar for support on her right hand and lift her braced leg onto the lift. Therefore, right side of lift can be employed to mount other mechnisms.**

   **As for ease to get on, she does not need a step as she does not find difficultly climbing onto the lift for the current one.**

4. *How difficult is the lift to move around? (Targeting the castor diameter size)*
   **Weight is indeed an issue. It is difficult to move the lift around. We need to try and reduce weight. Also, Dr. Muraszko does not like to be pushed while she is standing/sitting on lift. Hence, the need to keep a free side for her to climb on once the lift is in position. They specifically want better wheels/castors.**

5. *We have a list of customer requirements from the previous ME 450 teams. Are there any changes/ modifications to it? Anything apart from hand and seat support required?*
   - Stability & Safety
   - Comfort of the lift
   - Comfort of the seat
   - Easy mobility
   - Simple control
   - Low noise level
   - Adjustable seating
   - Platform traction

**All still apply.**

6. *Who operates the controls in the OR? Is it Dr. Muraszko or the nurses? Is Dr. Muraszko allowed to lower her arms below waist level?*
   **Dr. Muraszko operates the vertical controls for the lift( buttons). Nurses usually deploy the seat; but often there are not enough nurses available to deploy the seat due to only one person being unsterilized. As for the lift itself, Dr. Muraszko has travelled the maximum height on occasions also. They would really like a motorized mechanism to deploy the seat.**

7. *Does number of steps to set up the mechanisms matter? Is it crucial? How long is the seat in use?*
   **Number of steps is more crucial than the time taken to set it up. Ultimately both need to be reduced. But making it easier to deploy is more important.**

8. *How is the sterilization process performed? Do we need to reduce crevices on the device (such as 90 degree joints, corners welds etc...)?*
   **They use *Virex* ( by Johnson & Johnson) to clean the lift. The entire lift is draped ( hence buttons need to be easily distinguishable under the drape.) We want to reduce crevices, welds, etc.. but they are on the opinion that regardless, they will have to clean the lift thoroughly no matter what the design.**

9. *What is the preferred seat cushion type: square, round, saddle?*
   **Seat does not need to be square. Other types are also viable. Round would be nice. She wants the seat to be vinyl covered so that it is easy to clean.**

10. *Does the arm support have to be permanent or can be detached?*
    **Arm support cannot be permanent. Has to easily swing/clear/store away when she needs to stand and operate.**

11. *How easy is it to step onto the lift right now?*
    **She does not have any issues with stepping onto the lift right now. Ms. Bellairs did not really see the need for putting a step. Either way, Dr. Muraszko needs something (lean bar) to grab onto so that she can lift her braced foot onto the lift. Hence, the front of the lift will not be viable for adding a step.**

12. *How much Horizontal & Vertical Adjustment is required in the seat? Does Dr. Muraszko have to lean on the bar or lean forward over the platform while performing surgery?*
    **No vertical Adjustment required in the seat. Only requires horizontal adjustment. Height of the current seat is appropriate. She does not lean on the bar while operating. Only for resting. Horizontal adjustment should be able to cover all surface of the platform since she does not operate in the centre.**

13. *Can the arm supports or seat swing out of the platform area? How much Leeway is there in the operating room? Does the lift slide below the counter of the surgical table?*

**There is limited space in the operating room. We need to ensure that the arm support/ seat does not swing out of the lift footprint area. Lift never slides below the counter of the operating table. The front of the lift is always flush against the operating table. They like the flip down seat option.**

14. *Does Dr. Muraszko adjust the height of the seat in the middle of an operation? (not the height of the lift, but does she want to sit higher or lower depending on the situation)*
    **No. Ms. Bellairs said that the height of the seat is currently perfect for Dr. Muraszko.**

15. *Does the seat have to be in the absolute centre of the lift, or does she change her angle when operating?*
    **See question 13**

16. *Would a foot pedal be required?*
    **They would like a foot pedal.**

17. *What potential machines/tables may be around the lift during operation and where and how far is it placed from the lift?*
    **See question14**

18. *Can we visit the OR when Dr. Muraszko is operating?*
    **No more operations for Dr. Muraszko this week. There are generally fewer operations at this time of the year. Dr. Muraszko is mostly involved in administrative work, meetings etc. They also do not have viewing facilities (glass doors, etc.) for the operation. However, Ms. Bellairs said she could videotape Dr. Muraszko using the lift during an operation. Need to send her reminder next Monday (Send email Sunday Night).**
19. *Can magnets be used as part of our mechanism?*
    **Yes, they can be utilized.**

20. *What kind of plastics can be used?*
    **Non Porous Plastic.**

# APPENDIX B
## Gantt chart

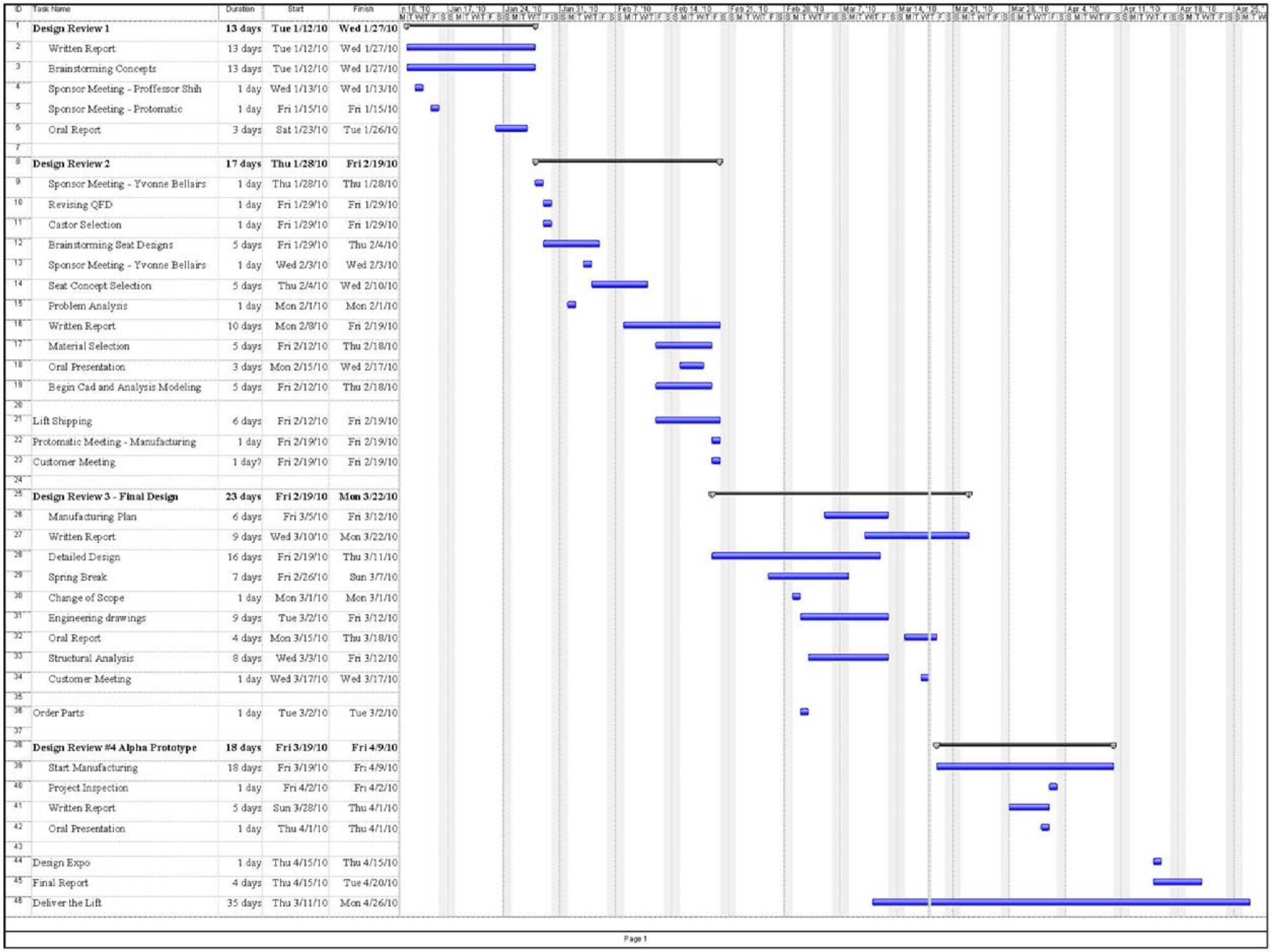

| ID | Task Name | Duration | Start | Finish |
|---|---|---|---|---|
| 1 | **Design Review 1** | **13 days** | **Tue 1/12/10** | **Wed 1/27/10** |
| 2 | Written Report | 13 days | Tue 1/12/10 | Wed 1/27/10 |
| 3 | Brainstorming Concepts | 13 days | Tue 1/12/10 | Wed 1/27/10 |
| 4 | Sponsor Meeting - Proffessor Shih | 1 day | Wed 1/13/10 | Wed 1/13/10 |
| 5 | Sponsor Meeting - Protomatic | 1 day | Fri 1/15/10 | Fri 1/15/10 |
| 6 | Oral Report | 3 days | Sat 1/23/10 | Tue 1/26/10 |
| 7 | | | | |
| 8 | **Design Review 2** | **17 days** | **Thu 1/28/10** | **Fri 2/19/10** |
| 9 | Sponsor Meeting - Yvonne Bellairs | 1 day | Thu 1/28/10 | Thu 1/28/10 |
| 10 | Revising QFD | 1 day | Fri 1/29/10 | Fri 1/29/10 |
| 11 | Castor Selection | 1 day | Fri 1/29/10 | Fri 1/29/10 |
| 12 | Brainstorming Seat Designs | 5 days | Fri 1/29/10 | Thu 2/4/10 |
| 13 | Sponsor Meeting - Yvonne Bellairs | 1 day | Wed 2/3/10 | Wed 2/3/10 |
| 14 | Seat Concept Selection | 5 days | Thu 2/4/10 | Wed 2/10/10 |
| 15 | Problem Analysis | 1 day | Mon 2/1/10 | Mon 2/1/10 |
| 16 | Written Report | 10 days | Mon 2/8/10 | Fri 2/19/10 |
| 17 | Material Selection | 5 days | Fri 2/12/10 | Thu 2/18/10 |
| 18 | Oral Presentation | 3 days | Mon 2/15/10 | Wed 2/17/10 |
| 19 | Begin Cad and Analysis Modeling | 5 days | Fri 2/12/10 | Thu 2/18/10 |
| 20 | | | | |
| 21 | Lift Shipping | 6 days | Fri 2/12/10 | Fri 2/19/10 |
| 22 | Protomatic Meeting - Manufacturing | 1 day | Fri 2/19/10 | Fri 2/19/10 |
| 23 | Customer Meeting | 1 day? | Fri 2/19/10 | Fri 2/19/10 |
| 24 | | | | |
| 25 | **Design Review 3 - Final Design** | **23 days** | **Fri 2/19/10** | **Mon 3/22/10** |
| 26 | Manufacturing Plan | 6 days | Fri 3/5/10 | Fri 3/12/10 |
| 27 | Written Report | 9 days | Wed 3/10/10 | Mon 3/22/10 |
| 28 | Detailed Design | 16 days | Fri 2/19/10 | Thu 3/11/10 |
| 29 | Spring Break | 7 days | Fri 2/26/10 | Sun 3/7/10 |
| 30 | Change of Scope | 1 day | Mon 3/1/10 | Mon 3/1/10 |
| 31 | Engineering drawings | 9 days | Tue 3/2/10 | Fri 3/12/10 |
| 32 | Oral Report | 4 days | Mon 3/15/10 | Thu 3/18/10 |
| 33 | Structural Analysis | 8 days | Wed 3/3/10 | Fri 3/12/10 |
| 34 | Customer Meeting | 1 day | Wed 3/17/10 | Wed 3/17/10 |
| 35 | | | | |
| 36 | Order Parts | 1 day | Tue 3/2/10 | Tue 3/2/10 |
| 37 | | | | |
| 38 | **Design Review #4 Alpha Prototype** | **18 days** | **Fri 3/19/10** | **Fri 4/9/10** |
| 39 | Start Manufacturing | 18 days | Fri 3/19/10 | Fri 4/9/10 |
| 40 | Project Inspection | 1 day | Fri 4/2/10 | Fri 4/2/10 |
| 41 | Written Report | 5 days | Sun 3/28/10 | Thu 4/1/10 |
| 42 | Oral Presentation | 1 day | Thu 4/1/10 | Thu 4/1/10 |
| 43 | | | | |
| 44 | Design Expo | 1 day | Thu 4/15/10 | Thu 4/15/10 |
| 45 | Final Report | 4 days | Thu 4/15/10 | Tue 4/20/10 |
| 46 | Deliver the Lift | 35 days | Thu 3/11/10 | Mon 4/26/10 |

# APPENDIX C
## Quality Functional Deployment Diagram

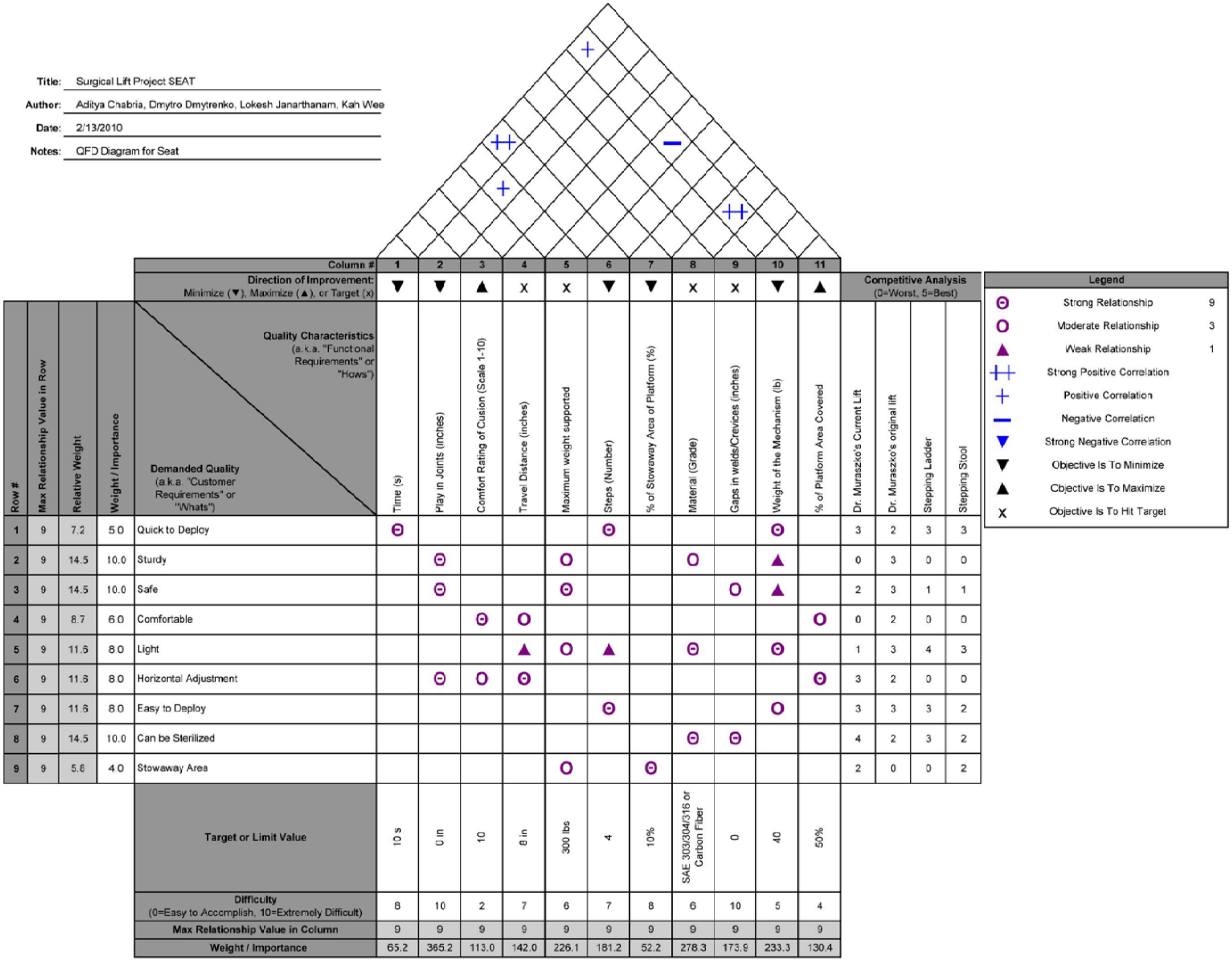

**Title:** Surgical Lift Project SEAT

**Author:** Aditya Chabria, Dmytro Dmytrenko, Lokesh Janarthanam, Kah Wee

**Date:** 2/13/2010

**Notes:** QFD Diagram for Seat

| | | | | Column # | 1 | 2 | 3 | 4 | 5 | 6 | 7 | 8 | 9 | 10 | 11 | Competitive Analysis (0=Worst, 5=Best) | | | |
|---|---|---|---|---|---|---|---|---|---|---|---|---|---|---|---|---|---|---|---|
| | | | | Direction of Improvement: Minimize (▼), Maximize (▲), or Target (x) | ▼ | ▼ | ▲ | x | x | ▼ | ▼ | x | x | ▼ | ▲ | | | | |
| Row # | Max Relationship Value in Row | Relative Weight | Weight / Importance | Quality Characteristics (a.k.a. "Functional Requirements" or "Hows")<br>Demanded Quality (a.k.a. "Customer Requirements" or "Whats") | Time (s) | Play in Joints (inches) | Comfort Rating of Cusion (Scale 1-10) | Travel Distance (inches) | Maximum weight supported | Steps (Number) | % of Stowaway Area of Platform (%) | Material (Grade) | Gaps in welds/Crevices (inches) | Weight of the Mechanism (lb) | % of Platform Area Covered | Dr. Muraszko's Current Lift | Dr. Muraszko's original lift | Stepping Ladder | Stepping Stool |
| **1** | 9 | 7.2 | 5.0 | Quick to Deploy | Θ | | | | | Θ | | | | Θ | | 3 | 2 | 3 | 3 |
| **2** | 9 | 14.5 | 10.0 | Sturdy | | Θ | | | O | | | O | | ▲ | | 0 | 3 | 0 | 0 |
| **3** | 9 | 14.5 | 10.0 | Safe | | Θ | | | Θ | | | | O | ▲ | | 2 | 3 | 1 | 1 |
| **4** | 9 | 8.7 | 6.0 | Comfortable | | | Θ | O | | | | | | | O | 0 | 2 | 0 | 0 |
| **5** | 9 | 11.6 | 8.0 | Light | | | | ▲ | O | ▲ | | Θ | | Θ | | 1 | 3 | 4 | 3 |
| **6** | 9 | 11.6 | 8.0 | Horizontal Adjustment | | Θ | O | Θ | | | | | | | Θ | 3 | 2 | 0 | 0 |
| **7** | 9 | 11.6 | 8.0 | Easy to Deploy | | | | | | Θ | | | | O | | 3 | 3 | 3 | 2 |
| **8** | 9 | 14.5 | 10.0 | Can be Sterilized | | | | | | | | Θ | Θ | | | 4 | 2 | 3 | 2 |
| **9** | 9 | 5.8 | 4.0 | Stowaway Area | | | | | O | | Θ | | | | | 2 | 0 | 0 | 2 |
| | | | | **Target or Limit Value** | 10 s | 0 in | 10 | 8 in | 300 lbs | 4 | 10% | SAE 303/304/316 or Carbon Fiber | 0 | 40 | 50% | | | | |
| | | | | **Difficulty** (0=Easy to Accomplish, 10=Extremely Difficult) | 8 | 10 | 2 | 7 | 6 | 7 | 8 | 6 | 10 | 5 | 4 | | | | |
| | | | | **Max Relationship Value in Column** | 9 | 9 | 9 | 9 | 9 | 9 | 9 | 9 | 9 | 9 | 9 | | | | |
| | | | | **Weight / Importance** | 65.2 | 365.2 | 113.0 | 142.0 | 226.1 | 181.2 | 52.2 | 278.3 | 173.9 | 233.3 | 130.4 | | | | |

| Legend | | |
|---|---|---|
| Θ | Strong Relationship | 9 |
| O | Moderate Relationship | 3 |
| ▲ | Weak Relationship | 1 |
| ++ | Strong Positive Correlation | |
| + | Positive Correlation | |
| − | Negative Correlation | |
| ▼ | Strong Negative Correlation | |
| ▼ | Objective Is To Minimize | |
| ▲ | Objective Is To Maximize | |
| x | Objective Is To Hit Target | |

## Functional Decomposition for Seat Design

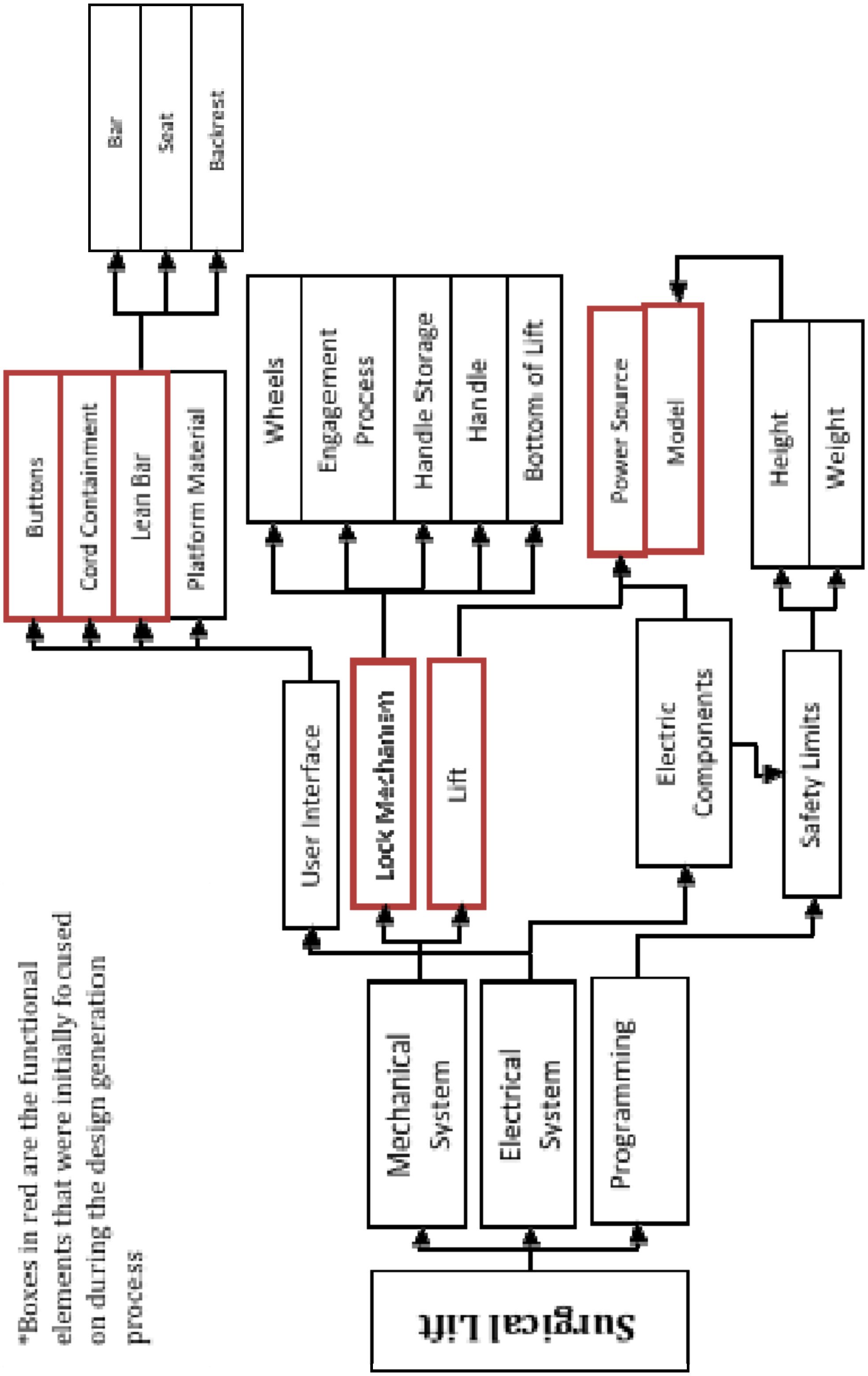

*Boxes in red are the functional elements that were initially focused on during the design generation process

## APPENDIX D

### Concept 1

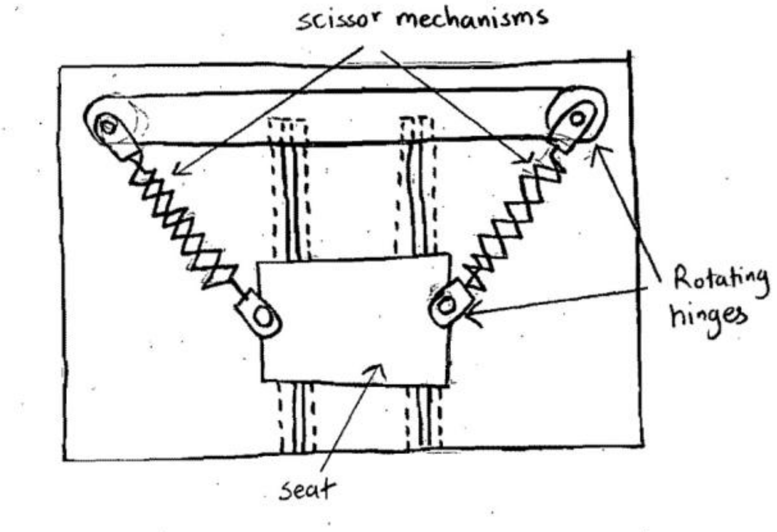

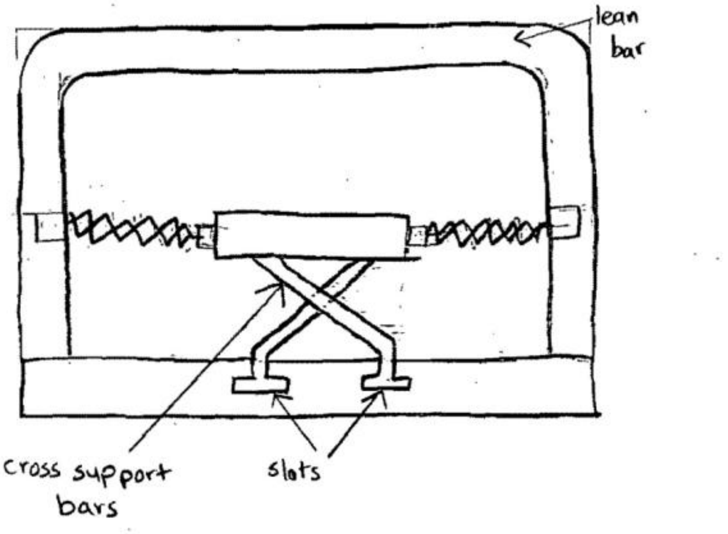

To fulfill the criteria of ease of deployment and minimum steps to deploy the mechanism, we came up with the idea of a scissor mechanism. It is easy to deploy as the scissor mechanism helps to extend the seat forward, and rods on the bottom of the seat in slots to ensure the seat is deployed horizontally forward. However, the major weakness of this design is the lack of sideways horizontal motion, which is an important customer requirement.

**Concept 2**

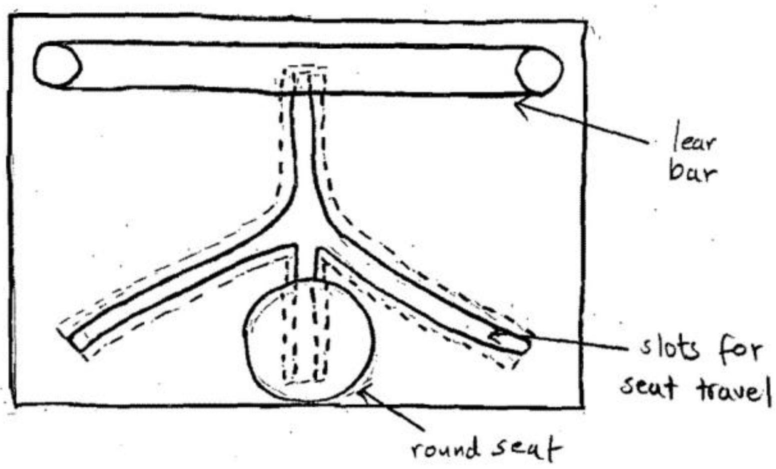

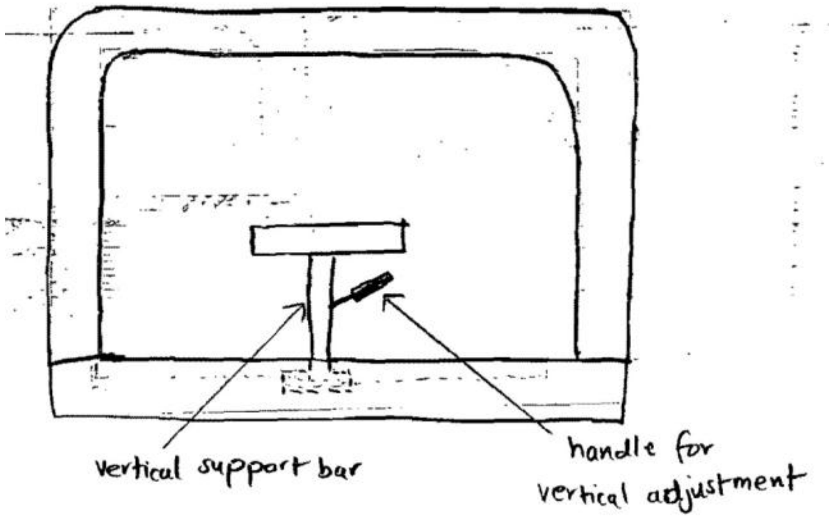

This design was made to ensure that the seat would cover the most amount of area on the lift. The slots serve as guides when pulling the seat out, however this design requires more effort to sterilize as it is hard to clean the slots which accumulates dirt and bacteria.

**Concept 3**

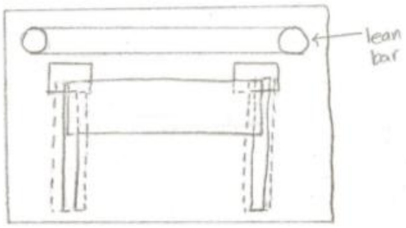

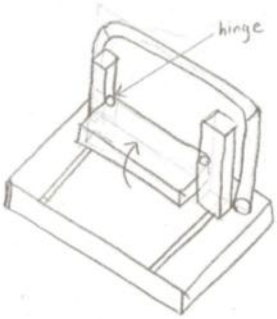

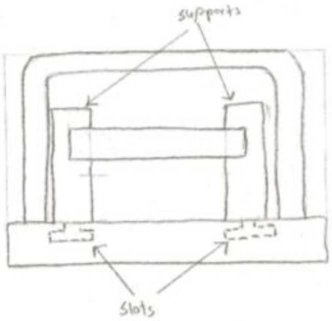

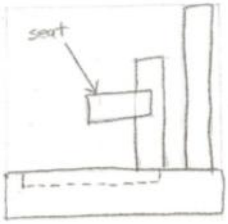

This concept is intended to provide a stable, rigid seat with sufficient adjustability to utilize maximum area of the platform. The seat is designed as a traditional bench; the length is much greater than the width of the seat. The adjustability is provided by two movable supports that hold the seat. The two movable supports are the weakness of the design, as the posts might get stuck when deploying. Also, the slots would require additional sterilization.

**Concept 4**

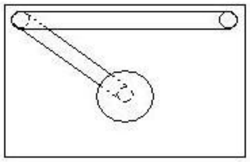

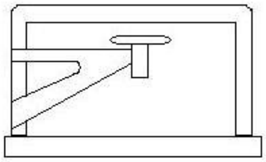

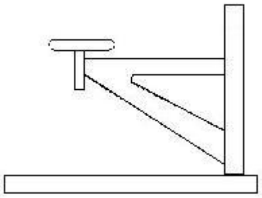

One of our main customer requirements was for the seat to be stowed away easily, preferably without the use of hands as everything above the waist is sterilized. Also, our customer wanted a chair that will cover the most area in the platform. Therefore, we came up with the single swing arm, because it would be easy to deploy as the seat swings out from behind the lift, and the customer would be utilizing her leg or waist instead of using her hands. However, the major weakness of this design is the deflection of the arm when our customer sits on the seat, as well as there is a limited coverage of platform area.

**Concept 5**

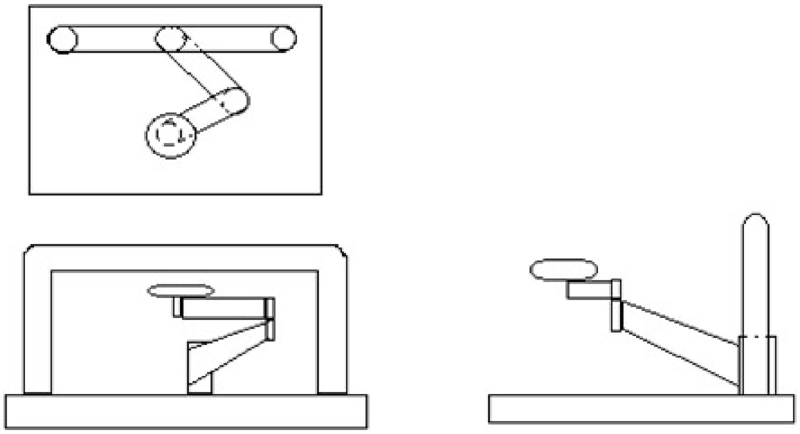

This is a swing seat with 2 arms crossed at a hinge. It is an upgraded version of the single arm, allowing us to have a wider range of motion as the seat will be easily deployed to whichever position the customer desires, and can be pushed back into the back underneath the lean bar out of the way quickly.  A round seat is used to ensure our customer can be seated at any angle with minimum disturbances from square seat edges. However, like its predecessor, we anticipate a large angular deflection at the arms which could compromise the sturdiness of the seat.

**Concept 6**

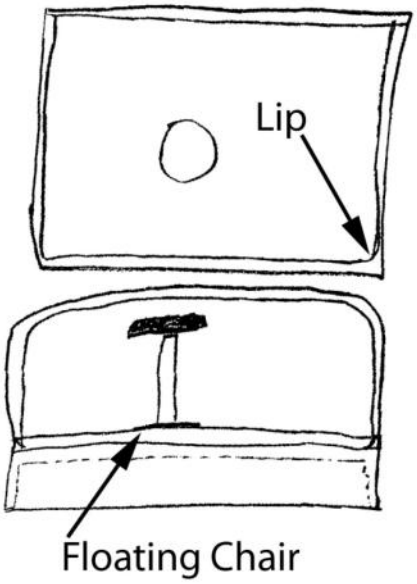

In this design, we were trying to come up with a design that incorporates both sturdiness and maximum area covered. A seat with castors would be placed on the platform, with veneers on the edge of the platform to ensure the seat doesn't fall off while in use. This seat would be sturdy, and the castors will ensure our customer can move around to her satisfied position. However, this design has 2 separate components, making it hard to keep track of both components when being transported around the hospital and the seat will not stow away easily.

**Concept 7**

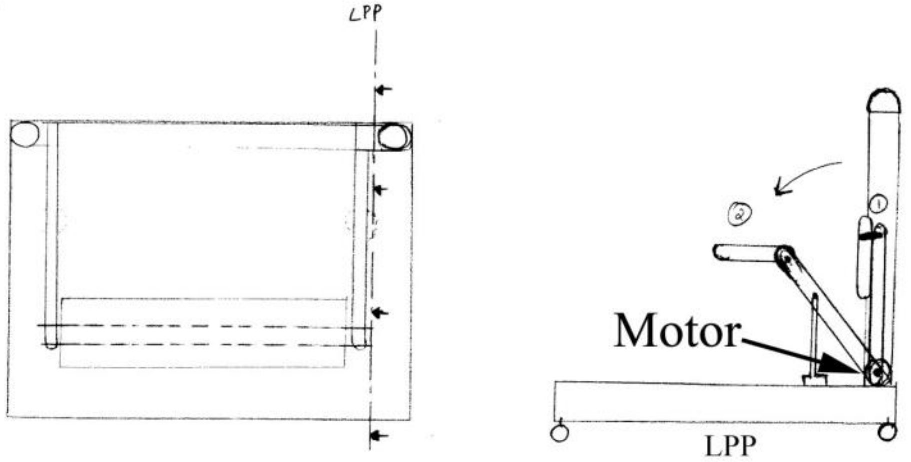

In our interview with Dr. Muraszko's personal assistant, Yvonne Bellairs, she mentioned they would be interested if the seat could be deployed with the touch of a button, which leads us to designing a seat which could be deployed with a motor. However, the major weakness of this design would be the seat failing to deploy or stow away in the middle of a surgery. In a worst case scenario, if the seat fails or falls down in the middle of surgery, there will be severe implications.

**Concept 8**

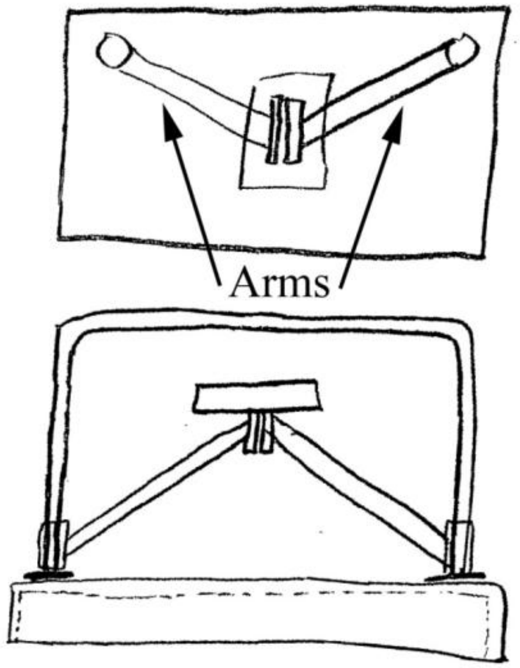

This design takes into account the customer requirement of having maximum area covered on the platform. This seat could be adjusted to the doctor's preferred angle, however we foresaw the slots locking up and getting the seat stuck. Also, the slots would require constant lubrication, especially after sterilization.

**Concept 9**

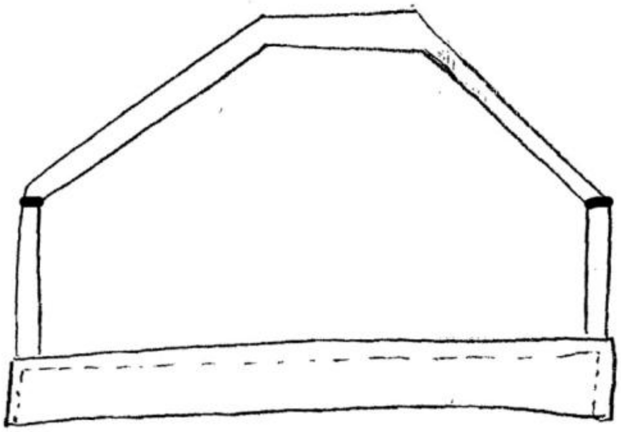

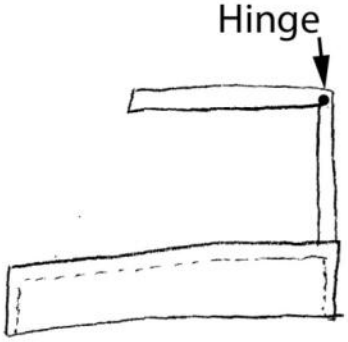

In order to reduce the weight of the current lift, we came up with this design to convert current parts on the lift into a multipurpose part. In this design, we converted the lean bar into a multipurpose part. When needed, the lean bar can be converted into a seat by releasing the lock and putting the seat down. However, this design lacks horizontal adjustment, plus if the lean bar was not properly put back into place, it may pose a hazard to the user.

**Concept 10**

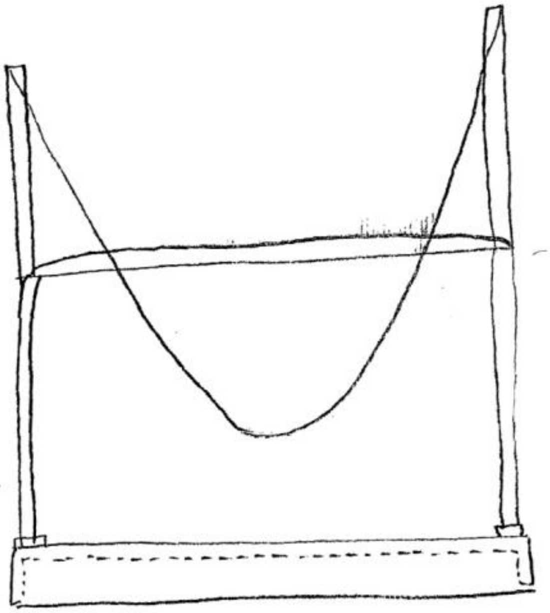

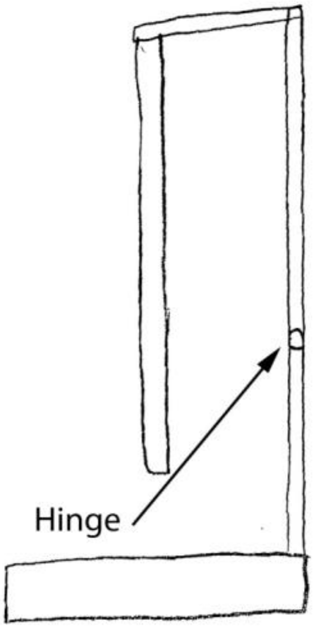

This design is a swing based style seat, where the doctor can sit on ‘swing’ while conducting surgery. However, the height of the supporting arms would be tall, complicating storage. Also, the swing seat would not be sturdy enough for conducting surgery.

**Concept 11**

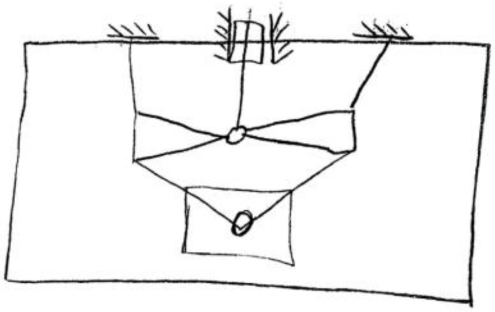

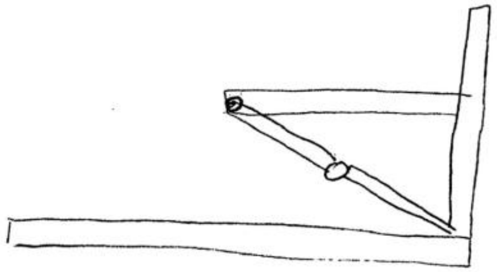

This design is a 8-bar mechanism. We considered using a bar mechanism as it may deploy easily. Unfortunately, this design concept has a major flaw, because it has too many joints and parts, therefore causing the seat to deflect considerably, and it does not stow away easily.

**Concept 12**

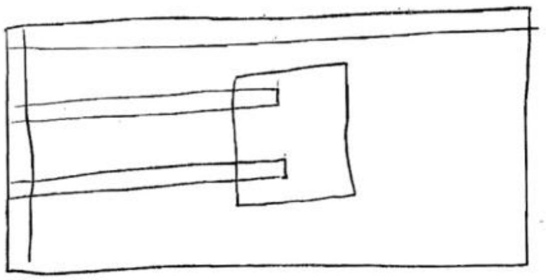

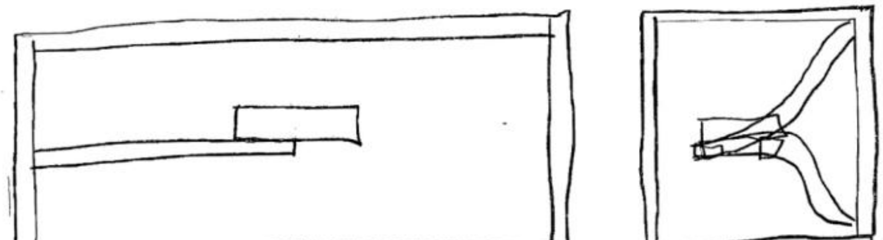

This design was a foldable seat concept, where the seat could be easily stowed away when not needed. The seat stows away by folding up into the connecting arms; however this design lacks horizontal adjustment. Also, the deployment of the seat is not intuitive, and may cause the seat to be damaged is used incorrectly.

**Concept 13**

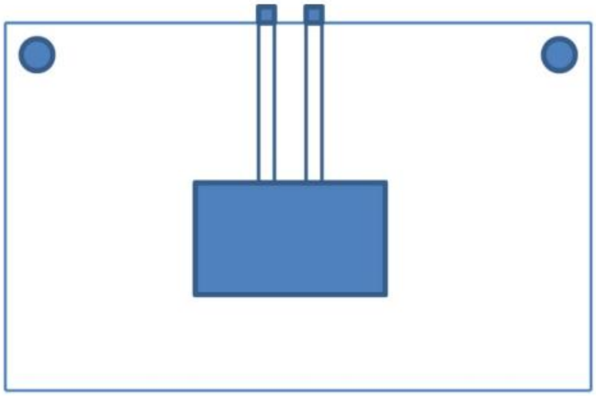

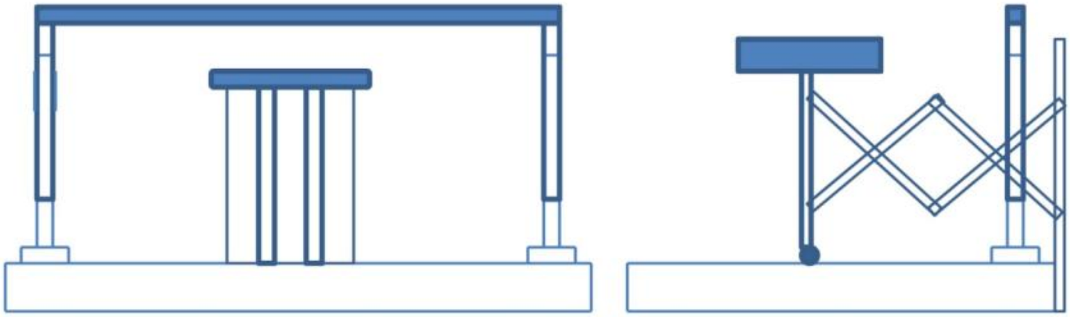

This design incorporates ease of deployment, as it can be deployed easily by pulling the seat out. The scissors mechanism helps the deployment of the seat, and it can also be motorised to push the seat out. However, like mentioned in previous sections, motor failures may happen and is extremely undesirable. In addition, the seat does not have sideway adjustments, limiting the amount of space covered.

## APPENDIX E

## Caster Selection

| Caster Selection | | | | | |
|---|---|---|---|---|---|
| Concept | A | B | C | D | REFERENCE |
| Design | Caster Industries (4.5") | Shepherd Industries (3") | Shepherd Industries (3.5") | California Casters (3") | *ME 450 Fall 2008 Team* |
| Diameter Size - Easy to Move | + | 0 | + | 0 | 0 |
| More Shock Absorption | + | 0 | + | 0 | 0 |
| Easy Maneuverability | + | 0 | + | 0 | 0 |
| Load Bearing Capacity | - | - | - | - | 0 |
| Braking/Locking Mechanism | 0 | + | + | 0 | 0 |
| Platform Height | - | 0 | - | 0 | 0 |
| Wheel Material | 0 | 0 | 0 | 0 | 0 |
| Plus | 3 | 1 | 4 | 0 | |
| Minuses | 2 | 1 | 2 | 1 | |
| Neutral | 2 | 5 | 1 | 6 | |
| Net | 1 | 0 | 2 | -1 | |
| Rank | 2 | 3 | 1 | 4 | |
| Continue? | No | No | Yes | No | |

1. **Caster Industries**
5901 Warner Ave., Suite 120 , Huntington Beach, CA 92649
Phone: 714-848-4118 - Fax: 714-848-6240

| WHEEL | | | | CAPACITY | LOAD HEIGHT | SWIVEL RADIUS | TOP PLATE (Add top Plate Suffix No.) | | | APP. WEIGHT |
|---|---|---|---|---|---|---|---|---|---|---|
| DIAMETER | TREAD WIDTH | TYPE | BEARING | POUNDS | INCHES | INCHES | PLAIN | TOTAL LOCK | SWIVEL LOCK | POUNDS |

| | | | | | |
|---|---|---|---|---|---|
| Poly Loc Poly | Ball | 275 | 4-50-213P | 4-50-213PBL | 4-50-213PSLI |

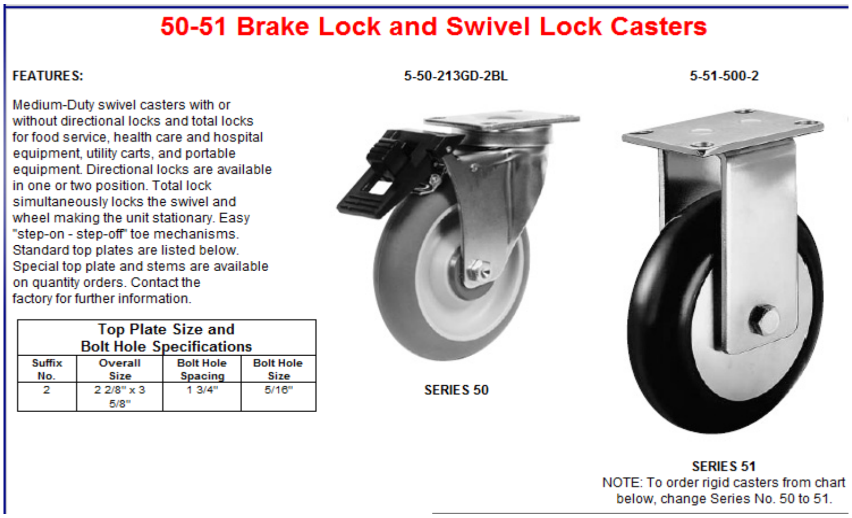

50-51 Brake Lock and Swivel Lock Casters

FEATURES:

Medium-Duty swivel casters with or without directional locks and total locks for food service, health care and hospital equipment, utility carts, and portable equipment. Directional locks are available in one or two position. Total lock simultaneously locks the swivel and wheel making the unit stationary. Easy "step-on - step-off" toe mechanisms. Standard top plates are listed below. Special top plate and stems are available on quantity orders. Contact the factory for further information.

| Top Plate Size and Bolt Hole Specifications | | | |
|---|---|---|---|
| Suffix No. | Overall Size | Bolt Hole Spacing | Bolt Hole Size |
| 2 | 2 2/8" x 3 5/8" | 1 3/4" | 5/16" |

5-50-213GD-2BL

SERIES 50

5-51-500-2

SERIES 51

NOTE: To order rigid casters from chart below, change Series No. 50 to 51.

## 2. Shepherd Industries

**Company:** GREAT LAKES CASTER
**Address:** 12200 FARMINGTON RD
**City:** LIVONIA
**State/Province:** MI
**Country:** United States
**Postal Code:** 48150
**Phone:** 800-782-0663
**Fax:** 734-522-6110

**Total Lock Brake**
Change 3rd digit to "T".
Swivel radius 4-3/8". Example:
PGT30120ZN-TPR11(GG).

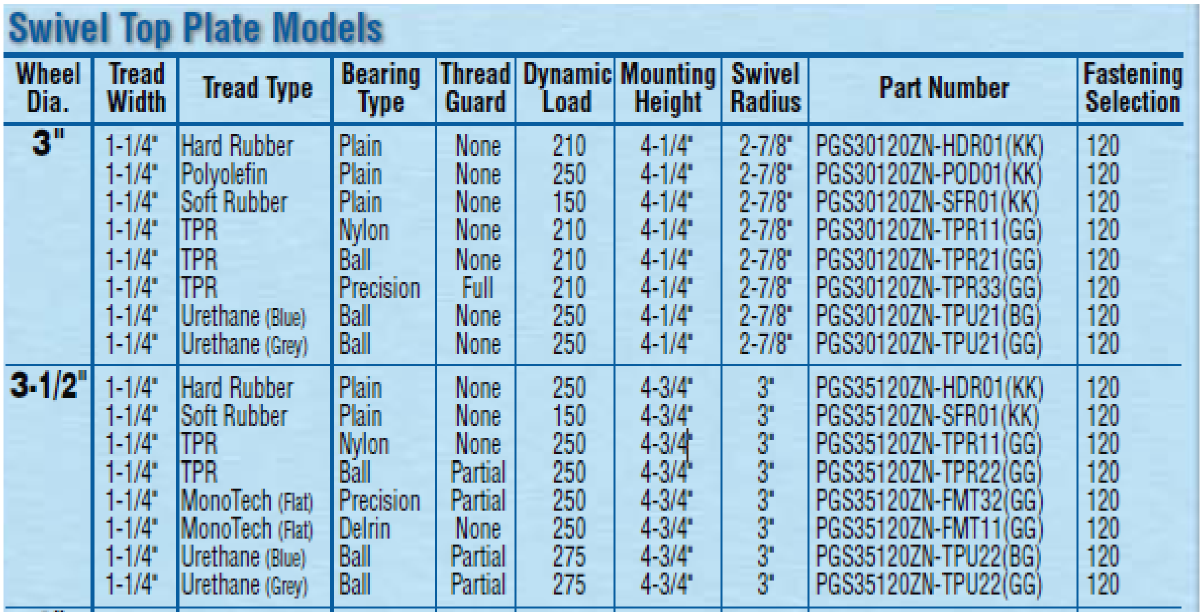

**Swivel Top Plate Models**

| Wheel Dia. | Tread Width | Tread Type | Bearing Type | Thread Guard | Dynamic Load | Mounting Height | Swivel Radius | Part Number | Fastening Selection |
|---|---|---|---|---|---|---|---|---|---|
| 3" | 1-1/4" | Hard Rubber | Plain | None | 210 | 4-1/4" | 2-7/8" | PGS30120ZN-HDR01(KK) | 120 |
| | 1-1/4" | Polyolefin | Plain | None | 250 | 4-1/4" | 2-7/8" | PGS30120ZN-POD01(KK) | 120 |
| | 1-1/4" | Soft Rubber | Plain | None | 150 | 4-1/4" | 2-7/8" | PGS30120ZN-SFR01(KK) | 120 |
| | 1-1/4" | TPR | Nylon | None | 210 | 4-1/4" | 2-7/8" | PGS30120ZN-TPR11(GG) | 120 |
| | 1-1/4" | TPR | Ball | None | 210 | 4-1/4" | 2-7/8" | PGS30120ZN-TPR21(GG) | 120 |
| | 1-1/4" | TPR | Precision | Full | 210 | 4-1/4" | 2-7/8" | PGS30120ZN-TPR33(GG) | 120 |
| | 1-1/4" | Urethane (Blue) | Ball | None | 250 | 4-1/4" | 2-7/8" | PGS30120ZN-TPU21(BG) | 120 |
| | 1-1/4" | Urethane (Grey) | Ball | None | 250 | 4-1/4" | 2-7/8" | PGS30120ZN-TPU21(GG) | 120 |
| 3-1/2" | 1-1/4" | Hard Rubber | Plain | None | 250 | 4-3/4" | 3" | PGS35120ZN-HDR01(KK) | 120 |
| | 1-1/4" | Soft Rubber | Plain | None | 150 | 4-3/4" | 3" | PGS35120ZN-SFR01(KK) | 120 |
| | 1-1/4" | TPR | Nylon | None | 250 | 4-3/4" | 3" | PGS35120ZN-TPR11(GG) | 120 |
| | 1-1/4" | TPR | Ball | Partial | 250 | 4-3/4" | 3" | PGS35120ZN-TPR22(GG) | 120 |
| | 1-1/4" | MonoTech (Flat) | Precision | Partial | 250 | 4-3/4" | 3" | PGS35120ZN-FMT32(GG) | 120 |
| | 1-1/4" | MonoTech (Flat) | Delrin | None | 250 | 4-3/4" | 3" | PGS35120ZN-FMT11(GG) | 120 |
| | 1-1/4" | Urethane (Blue) | Ball | Partial | 275 | 4-3/4" | 3" | PGS35120ZN-TPU22(BG) | 120 |
| | 1-1/4" | Urethane (Grey) | Ball | Partial | 275 | 4-3/4" | 3" | PGS35120ZN-TPU22(GG) | 120 |

a. PGT35120ZN-TPU22(BG) (Total Lock Brake Swivel Type) 3.5 inch

b. 1-1/4" Urethane (Grey) Ball None 250 4-1/8" 2-7/8" PGS30___ZN-TPU21(GG) 440-455 (3 inches)

### 3. California Caster

| Wheel Diameter Inches (mm) | Tread Width (Inches) | Wheel Description | Capacity (Lbs) | Load Height Inches (mm) | Swivel Radius Inches (mm) | Wheel Bearing | Model Number |
|---|---|---|---|---|---|---|---|
| 3 1/1/04 |  | Polyurethane TPU | 165 | 4-7/16” (113) | 4-1/4” (108) | Precision Ball | SS-03PYP-125-TL-___ |
|  |  |  |  |  |  |  |  |

|  |  |  |
|---|---|---|
|  | California Caster | (800) 950-8750 |
| Location: | 1400 17th Street | (415) 552-6750 |
|  | San Francisco, CA 94107 | (415) 552-0463 Fax |

# APPENDIX F

## Simple Engineering Analyses

The translated engineering specifications from customer requirements are listed with targets below. Fundamentals that will be needed to address the project goals are strength of materials, mechanical behavior of materials and solid mechanics.

Table F.1: Engineering Specifications with Targets

Play in Joints ~ Minimal (0.008in.)
Maximum weight supported (lb)= 300 lb
Material- Medical Grade SS 303/304/316
Gaps in Crevices/Welds ~ Nil
Comfort Rating of Cushion (1-10)
Material Used (Stainless Steel Grade)
Horizontal Travel Distance (in) = 8 in
Weight of Mechanism (lb) = 40 lb
Number of steps < 4
Time to Deployment < 10s
% of Platform Area Occupied < 10%

We will have to make certain assumptions for the model analysis of the selected design.

- The design will have to be modeled as a rigid link for cantilever beam analysis.
- The truss is assumed to comprise of members connected by pin joints supported at the base by rollers or hinges.

The results of our model analysis will determine whether or not we achieve the target engineering specifications set. For example, maximum weight supported will be determined whether or not the design can withstand the forces in truss and cantilever beam analysis. Weight of the mechanism will be determined by the fact that thickness of the material used will influence the maximum weight supported.

### Static Analysis of Concept Design

Basic preliminary static analysis of the selected collapsible arm design shows that Dr. Muraszko's weight will be the main force causing deflection in the mechanism links. This leads us to believe that we will be using the equation for end deflection in a cantilever beam as an approximation for our mechanism.

$$\delta = \frac{PL^3}{3EI}$$

Where, *P* is the force (Weight) in N, *L* is the span of the beam in m, *E* is the Young's Modulus of the material in Pa and *I* is the Area moment of Inertia in $m^4$.

Owing to the nature of the reinforcing design, we will have to use static truss analysis to calculate the forces in the links of the mechanism. The truss analysis will also give us forces acting on the joints as well as shear force in the bolts/locking mechanism of the joints. Furthermore in static truss analysis we will have to include

We will have to check for yield criterion in each of the links of the mechanism and have to maintain high safety factors due to the nature of the project.

Testing of the Mechanism

We will test the mechanism such that if it survives the roughest kind of handling, it will function appropriately when used on a normal day to day basis. We will have a person considerably heavier than Dr. Muraszko use the lift to check and see if it functions as wanted. We can estimate the deflection if any in the mechanism when the person is seated. Play in joints can be estimated when in use, weight of the mechanism can be measured, travel distance can be measured, time to deploy can be measured and maximum weight supported will be only theoretical as we will not be proof testing it.

Design Drivers

The discussion with Ms. Bellairs helped us focus on the main driving factors in the design- Easy to Deploy, far reach of the seat, and lightweight. We will be keeping these factors in mind all the time while designing as these are the primary driving parameters.

## APPENDIX G

### Shaft Analysis

Main Shaft

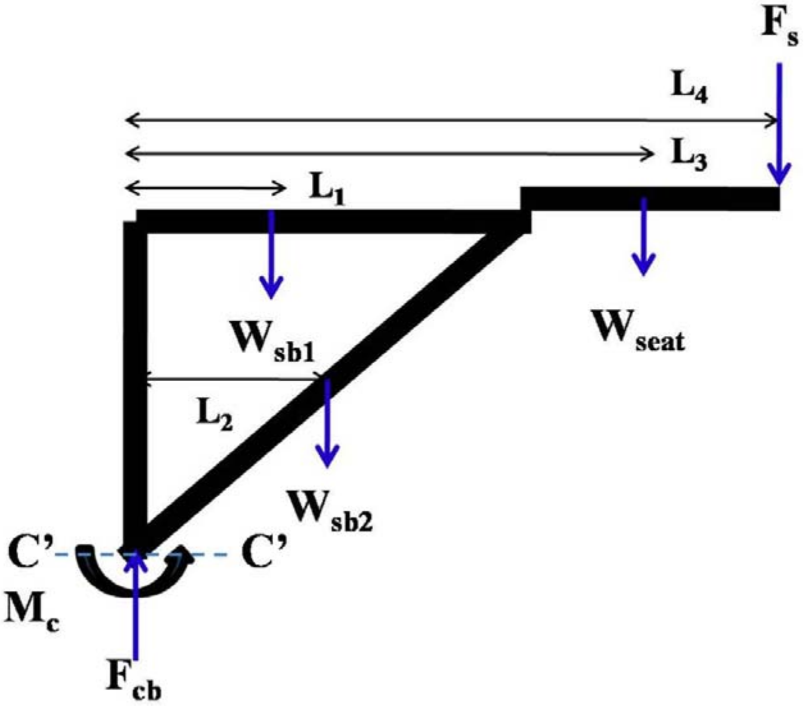

*Figure G.1: Free-body diagram used for analysisi of main shaft*

Bending Moment in main shaft: $\sum M : M_c = L_1 W_{sb1} + L_2 W_{sb2} + L_3 W_{seat} + L_4 F_s = 3754.85$ lb•in [18]
Support Force in support block: $\sum F : F_c = W_{sb1} + W_{sb2} + W_{seat} + F_s = 215.85 lb$ [18]
Cross Sectional Area, $A$: 1.767 $m^2$
Moment of Inertia across cross-section of main shaft, $I$: 0.249 $in^4$
Shaft Diameter = 1.5 in
Shaft Radius = 0.75 in
Shaft Material: AISI 1566 Case Hardened Steel
Yield Strength, $\sigma_{yield}$: 99 350 psi

At main shaft cross-section C'-C',
Stress analysis for yield gives:

$$\sigma_{normal} = \frac{My}{I} + \frac{F_{normal}}{A} = \frac{3754.85 \times 0.75}{0.249} + \frac{215.85}{1.767} = 11432 psi$$

$$SF = \frac{\sigma_{normal}}{\sigma_{yield}} = 8.69$$

[18]

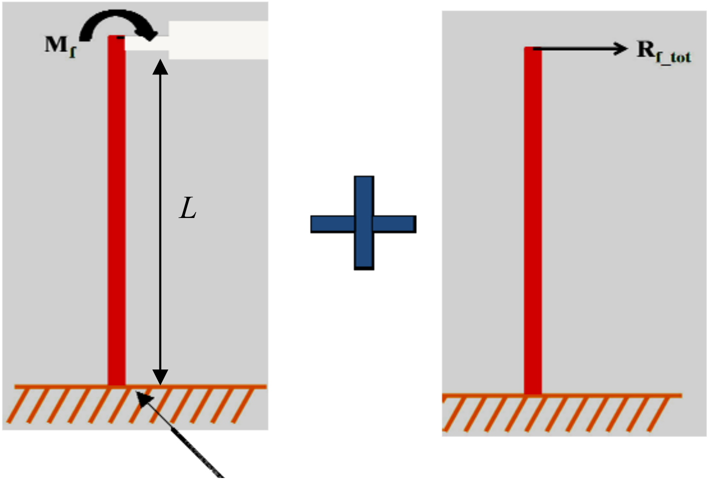

*Figure G.2: Superposition of deflection due to bending moment and horizontal force*

$v_x$ = Horizontal deflection of main shaft

$v_x$ = deflection due to horizontal force + deflection due to bending moment

Deflection due to perpendicular force, $v = \dfrac{PL^3}{3EI}$

Deflection due to bending moment, $v = \dfrac{ML^2}{2EI}$

Moment of Inertia across cross-section of main shaft, $I$: 0.249 in$^4$
Modulus of Elasticity, $E = 29 \times 10^6$ psi
Horizontal force, $P = 207.35$ lb
Length of shaft, $L = 18.115$ in
Bending moment, $M = 3880.925$ lb·in

$$v_x = \frac{PL^3}{3EI} + \frac{ML^2}{2EI} = \frac{207.35lb \times (18.115in)^3}{3 \times 29 \times 10^6 lb/in^2 \times 0.249in^4} + \frac{3880.925lb \bullet in \times (18.115in)^2}{2 \times 29 \times 10^6 lb/in^2 \times 0.249in^4} = 0.145 \text{ in}$$

Arm Joint Shaft

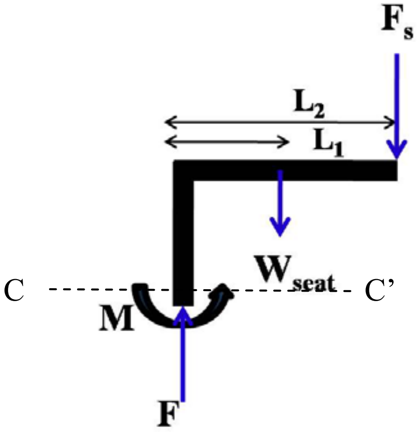

*Figure G.3: Free-body diagram used for analysis of arm joint shaft*

$L_1 = 3.75$ in
$L_2 = 7.5$ in
Bending Moment in main shaft:
$\sum M : M = L_1 W_{seat} + L_2 F_s = 3.75in \times 7.35lb + 7.5in \times 200lb = 1527.56lb{\bullet}in$
Normal Force in main shaft: $\sum F : F = W_{seat} + F_s = 200lb + 7.35lb = 207.35lb$
Cross Sectional Area, $A$: 0.785 m$^2$
Moment of Inertia, $I$: 0.0491 in$^4$
Shaft Diameter = 1 in
Shaft Radius = 0.5 in
Shaft Material: AISI 51 200 Case Hardened Steel
Yield Strength, $\sigma_{yield}$: 240 000 psi

At seat shaft cross-section C'-C',
Stress analysis for yield gives:

$$\sigma_{normal} = \frac{My}{I} + \frac{F_{normal}}{A} = \frac{1527.56lb{\bullet}in \times 0.5in}{0.0491in^4} + \frac{207.35lb}{0.785in^2} = 37351psi$$

$$SF = \frac{\sigma_{yield}}{\sigma_{normal}} = \frac{240000psi}{37351psi} = 6.43$$

## Seat Bar

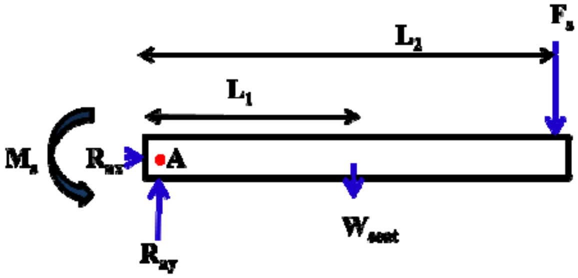

*Figure G.4: Free Body Diagram for Seat Bar*

$L_1 = 3.75in \qquad\qquad L_2 = 7.5in$

$\sum F_x : R_{ax} = 0$

$\sum F_y : R_{ay} = W_{seat} + F_s = 200lb + 7.35lb = 207.35lb$

$\sum M_A : M_s = L_1 W_{seat} + L_2 F_s = 3.75in \times 7.35lb + 7.5in \times 200lb = 1527.56lb \bullet in$

## Swing Bar 1

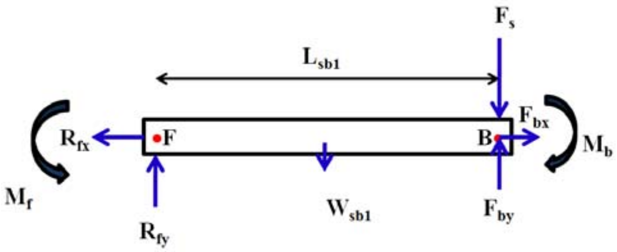

*Figure G.5: Free Body Diagram for top bar in the truss structure*

Bending moment in the arm:

$\theta = 45°$

$$\sum M : M_f = \left(\frac{W_{seat}}{2} + F_s\right) L_1 - W_{sb1}\frac{L_{sb1}}{2} + R_{ay} L_{sb1}$$

$$\left(\frac{7.35}{2} + 200\right)7 - \frac{5.5 \bullet 12}{2} + 207.35 \bullet 12 = 3880.93 \text{ in.lb.}$$

$\sum F_y : R_{fy} = W_{sb1} - F_{by} + F_s$

$R_{fy} = 5.5 - 212 + 207.35 + = .85lb$

$\sum F_x : R_{fx} = F_{bx} = F_s \cot\theta$

$F_{fx} = 207.35 \cot(45) = 207.35lb.$

### Swing Bar 2

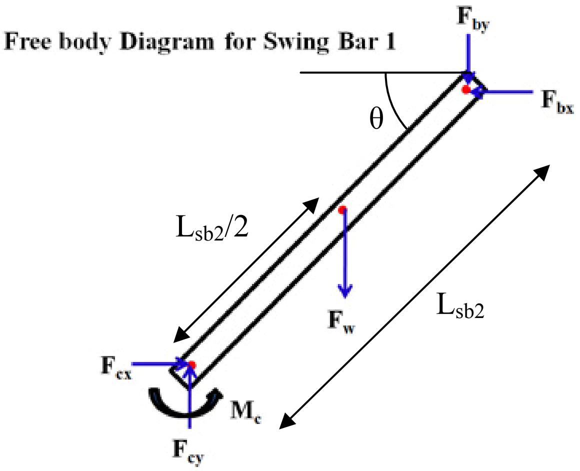

*Figure G.6: Free Body Diagram for angled bar*

$$\sum M : M_c = \frac{L_{sb2}}{2} F_w \cos\theta + L_{sb2} F_s \cos\theta$$

$$M_c = \frac{11.5}{2} 5\cos(45) + 11.5 \bullet 207.35 = 2388.59 in \bullet lb.$$

$$\sum F_x : R_{cx} = F_{bx} = F_s \cos\theta = 207.35 \cot(45) = 207.35 lb.$$

$$\sum F_y : F_{cy} = F_{by} + F_w = 207.35 + 5 = 212.35 lb.$$

### Truss Analysis

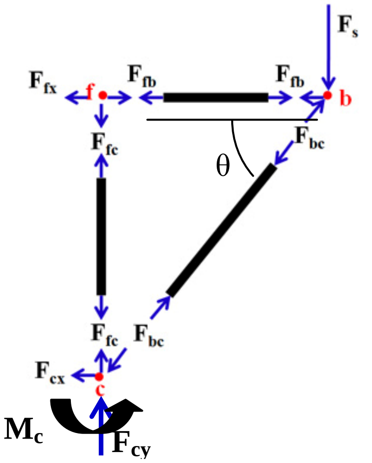

*Figure G.7: Free Body Diagram of joint Analysis for the complete truss assembly*

$$F_{bc} = \frac{W_{seat} + F_s}{\sin\theta} = \frac{2 + 207.35}{\sin(45)} = 296.1 lb.$$

$$F_{cx} = F_{fx} = F_{fb} = F_s \cot\theta = 207.35 \cot(45) = 207.35 lb.$$

$$F_{fc} = F_{cy} = 212.35 lb.$$

## Press Fit Hole Analysis

Maximum Material Condition:
Press fit for a 1.5in. hole is between 0.0023 in. and 0.0005 in.

Shaft – Minimum Tolerance (-0.0006 in.)
Hole – Maximum Tolerance (-0.0029 in.)

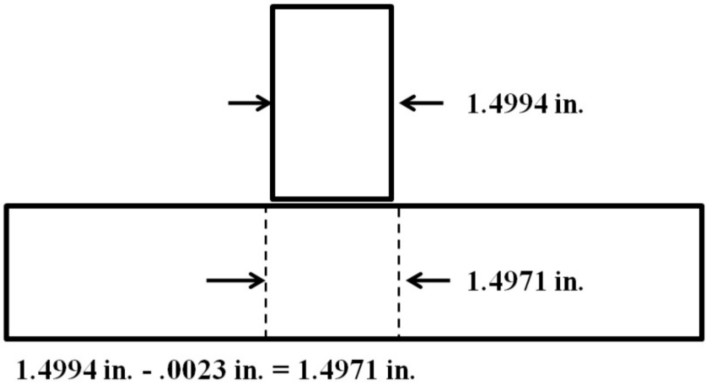

*Figure G.8: MMC Press fit calculation for support block*

Least Material Condition:
Shaft – Maximum Tolerance (-0.00011 in.)
Hole – Minimum Tolerance (-0.0016 in.)

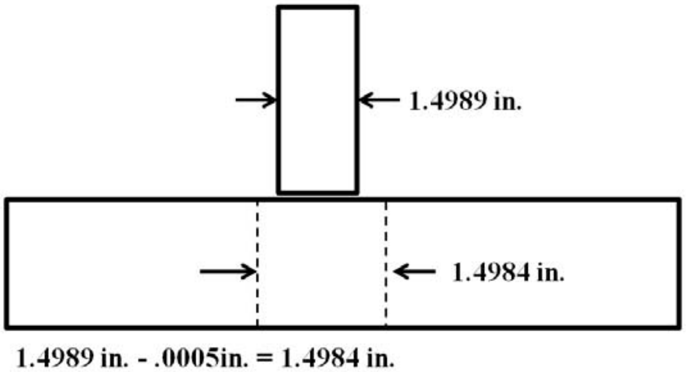

*Figure G.9: LMC Press fit calculation for support block*

Total Hole Size: $\boxed{1.5000^{-0.0016}_{-0.0029}}$

$$P = \frac{AaF}{2} = \frac{14.14\ in^2 \bullet 0.002\ in \bullet 325\ {}^{Ton}\!/_{in^3}}{2} = \boxed{4.59\ Ton}$$

$A = Surface\ Area\ \left(14.14\ in^2\right)$

$a = Interference\ \left(0.002\ in\right)$

$F = \text{Pr}essure\ Factor\ \left(325 Ton/in^3\right)$

**Buckling Analysis**

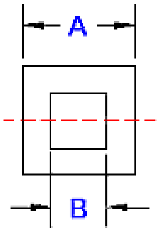

*Figure G.10: Cross Section of square tube in compression*

Square tube material: Plain Carbon Steel
Young's Modulus of Elasticity, $E$: = 3.05 $\times 10^7$ psi

Moment of Inertia: $I = \dfrac{A^4 - B^4}{12}$ = 0.534 in$^4$ [18]

$A$ and $B$ are dimensions as given in Figure F.1.
Length of tube, $L$ = 9.45 in

Buckling factor, $K$ = 2 (When an end is fixed and other is free; to analyze worst-case scenario)

Force for buckling: $F_{buckling} = \dfrac{\pi^2 EI}{(KL)^2} = \dfrac{\pi^2 \times 3.05 \times 10^7 lb/in^2 \times 0.534 in^4}{(2 \times 9.45 in)^2}$ = 449 164 lbs [18]

Actual force in beam, $F_{actual}$ = 293.4 lb (from truss analysis in Appendix E)

Safety factor, $SF = \dfrac{F_{buckling}}{F_{actual}} = \dfrac{449164 lb}{293.4 lb}$ = 1532

## Finite Element Analysis

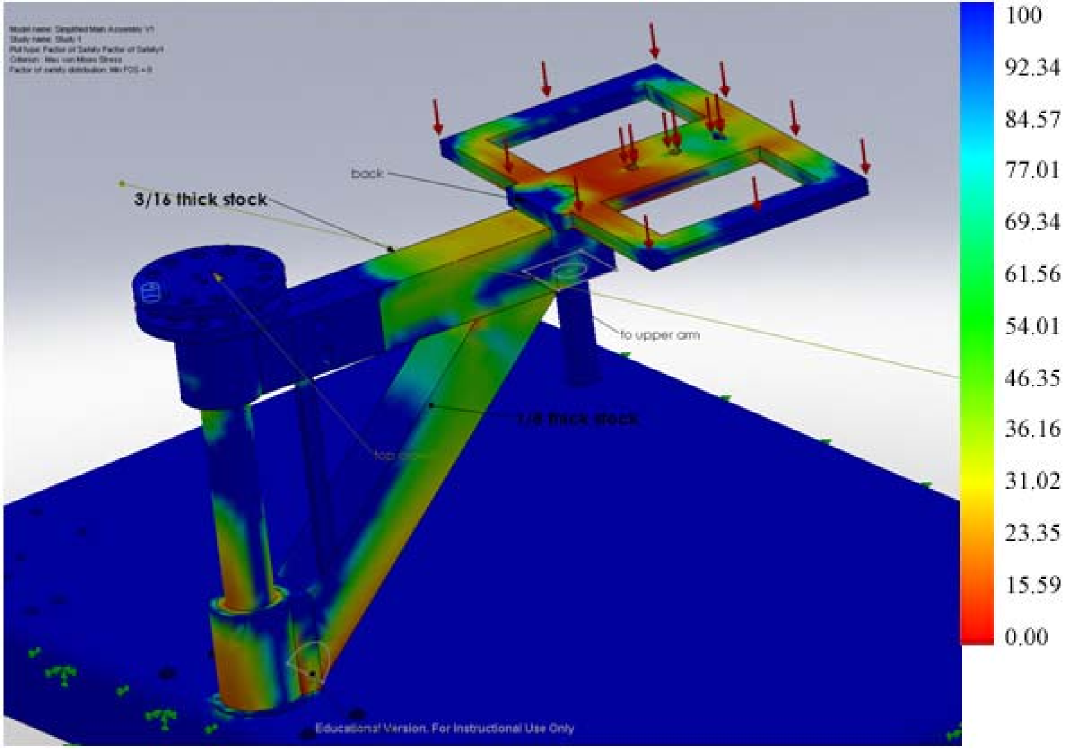

*Figure G.11: Factor of safety plot shows minimum F.O.S of 8 occurring at the seat frame and the base of the main shaft*

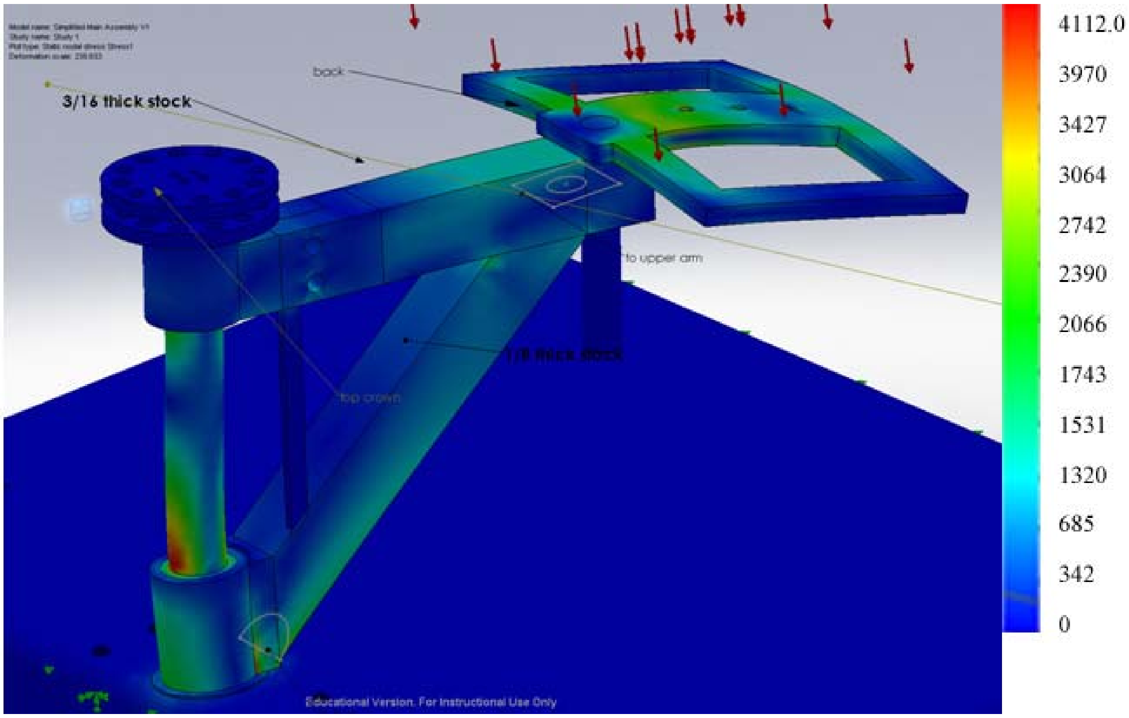

*Figure G.12: Von-Meisis Stress plot shows maximum stresses occurring at the base of the main shaft as predicted*

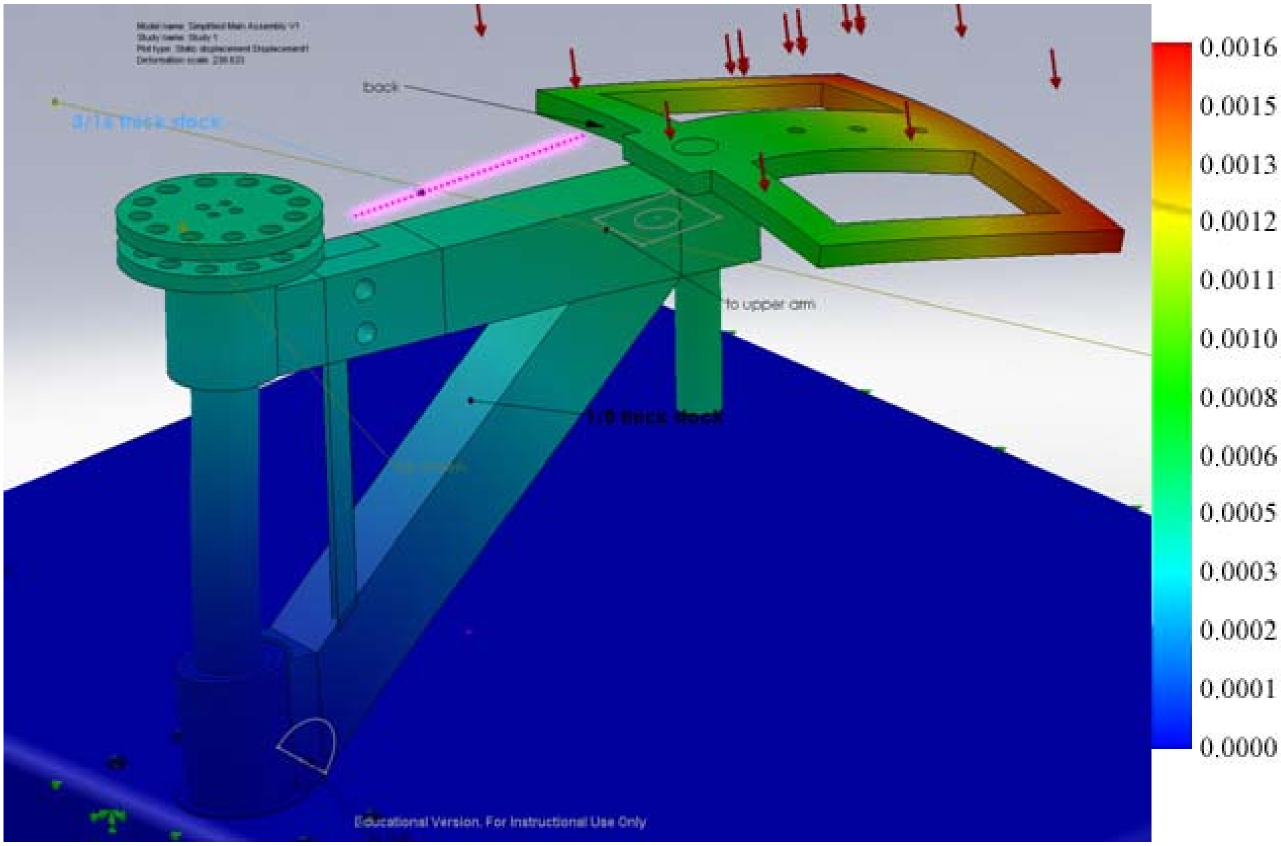

*Figure G.13: Displacement plot show maximum displacement of 0.0015 in occurs at the edge of the seat frame*

## Bearing Analysis

*Table G.1: Chosen Sleeve and Thrust Bearings*

| Bearing Location | Manufacturer | Part Number |
|---|---|---|
| | **Sleeve Bearings** | |
| Lower Hub | Applied Industrial | CJ24E32-24 |
| Upper Hub | Applied Industrial | CJ24E32-24 |
| Arm Joint | McMaster Carr | 6365K256 |
| | **Thrust Bearings** | |
| Lower Hub | McMaster Carr | 5909K41 |
| Upper Hub | McMaster Carr | 5909K41 |
| Arm Joint – Upper | McMaster Carr | 5909K36 |
| Arm Joint – Lower | McMaster Carr | 5909K36 |

*Safety Factor = Load Rating / Maximum Stress*

*Table G.2: Sleeve Bearing stress analysis shows acceptable safety factors*

| Bearing Location | Maximum Stress (psi) | Load Rating (psi) | Safety Factor |
|---|---|---|---|
| Lower Hub | 3760.8 | 35 000 | 9.31 |
| Upper Hub | 3121.1 | 35 000 | 11.21 |
| Arm Joint | 11 302 | 20 000 | 1.77 |

*Safety Factor = Load Rating / Maximum Thrust Load*

*Table G.3: Thrust Bearing stress analysis shows acceptable safety factors*

| Bearing Location | Maximum Stress (psi) | Bearing Contact Area ($in^2$) | Thrust Load (lb) | Load Rating (lb) | Safety Factor |
|---|---|---|---|---|---|
| Lower Hub | 1794.4 | 1.99 | 111.0 | 4580 | 41.3 |
| Upper Hub | 2812.7 | 1.99 | 173.9 | 4580 | 26.3 |
| Arm Joint – Upper | 3965.1 | 1,.13 | 139.4 | 3150 | 22.6 |
| Arm Joint – Lower | 2030.5 | 1,.13 | 71.4 | 3150 | 44.1 |

## Bolt Analysis

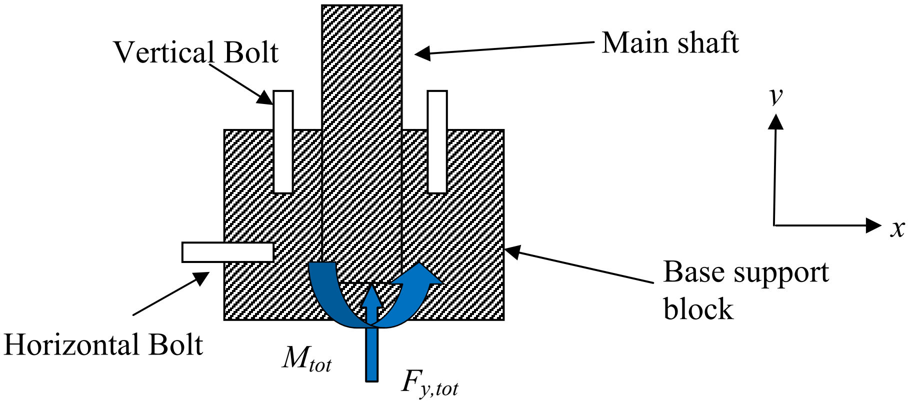

*Figure G.14: Schematic diagram of base assembly*

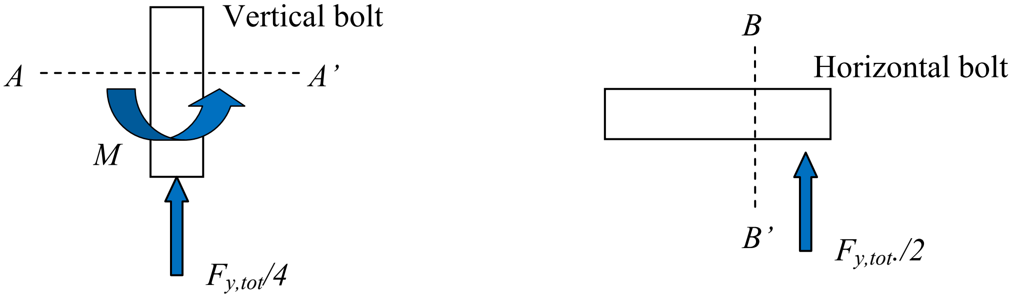

*Figure G.15: Free-body diagrams used for bolt analysis*

- Assume that the base block and main shaft are a fixed, rigid structure.
- Assume $M_{tot}$ and $F_{y,tot}$ are the forces exerted by the support block on the main shaft
- Assume vertical bolts are in tension and horizontal bolts are in compression (large bending moment would cause failure of vertical bolts first).
- Assume that the vertical bolts carry the vertical force and bending moment and the horizontal bolts prevent the vertical motion of the base.
- Assume that the vertical force and bending moment on the vertical bolts are equally distributed between the four vertical bolts.
- Assume that the vertical forces on the horizontal bolts are equally distributed between the two horizontal bolts.
- Stresses are determined at *AA'* cross-section for vertical bolts and *BB'* cross-section for horizontal bolts

$F_{y,tot} = 236.9$ lb
$F_x = 0$ lb
$M_{tot} = 3754.85$ lb · in
Bolt Material: 316 Stainless Steel
Load Rating, $P$: 180 000 psi
Cross Sectional Area, $A$: 0.1963 m$^2$

Moment of Inertia, *I*: 0.003068 in$^4$
Principal Stresses: $\sigma_{1,2}$

For vertical bolts,

$$\sigma_{normal}=\frac{My}{I}+\frac{F_{normal}}{A}=\frac{3754.85/4\times0.25}{0.003068}+\frac{236.9/4}{0.1963}=76794psi$$

$$\tau_{xy}=0psi$$

$$\sigma_{1,2}=\frac{\sigma_{xx}+\sigma_{yy}}{2}\pm\sqrt{\left(\frac{\sigma_{xx}-\sigma_{yy}}{2}\right)^2+\tau_{xy}^2}=76794psi$$

$$SF=\frac{P}{\max\left(\sigma_{1,2}\right)}=\frac{180000}{76794}=2.34$$

For horizontal bolts,

$$\tau=\frac{F_{shear}}{A}=\frac{236.9/2}{0.1963}=603.4psi$$

$$\sigma_{normal}=\frac{My}{I}+\frac{F_{normal}}{A}=0psi$$

$$\sigma_{1,2}=\frac{\sigma_{xx}+\sigma_{yy}}{2}\pm\sqrt{\left(\frac{\sigma_{xx}-\sigma_{yy}}{2}\right)^2+\tau_{xy}^2}=603.4psi$$

$$SF=\frac{P}{\max\left(\sigma_{1,2}\right)}=\frac{180000}{603.4}=298.3$$

*Table G.4: Bolt Stress Calculation show acceptable safety factors (for an individual bolt)*

| **Direction of bolt** | **Shear Stress (psi)** | **Normal Stress (psi)** | **Max Principal Stress (psi)** | **Safety Factor** |
|---|---|---|---|---|
| Vertical Bolt | 0 | 76 794 | 76 794 | 2.34 |
| Horizontal Bolt | 603.2 | 0 | 603.2 | 298 |

## Welding Analysis

Assuming:
SMAW welding process with E7010 Electrode

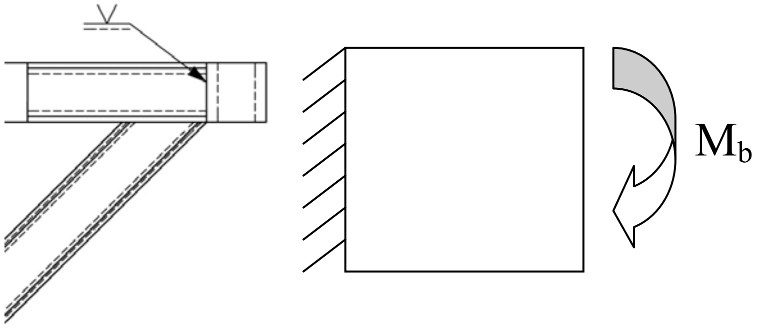

*Figure G.16:Digram indicating the location of the weld and corresponding moment on the arm joint block*

Primary Shear[18]

$$\tau_y' = \frac{\mathrm{V}}{\mathrm{A}} = \frac{200\mathrm{lb.}}{1.414\bullet \frac{1}{4}\mathrm{in.}\bullet\left(2\mathrm{in.}+2\mathrm{in.}\right)} = 141.44\mathrm{psi}$$

V- Load on the seat = 200lb.
A - Area of the weld
b - Weld Length(horizontal) = 2in.
d - Weld Length(vertical) = 2in.
h - Throat of the Weld = 1/4in.
M - Moment on the welded joint = 8in.*200lb

Secondary Shear[18]:

$$J_u = \frac{d^2\left(3b+d\right)}{6} = \frac{\left(2+2\right)^3}{6} = 5.33in^3$$

$$J = \frac{\sqrt{2}}{2}hJ_u = \frac{\sqrt{2}}{2}\frac{5}{16}in.5.33in^3 = 1.1789in^4$$

$$\tau_y'' = \tau_x''\frac{Mr}{J} = \frac{8in.1in.200lb}{1.179in.^4} = 1357psi$$

$$\tau_{\max} = \sqrt{\tau_x''^2 + \left(\tau_y' + \tau_y''\right)^2} = \sqrt{\left(1357psi\right)^2 + \left(141.44psi + 1357psi\right)^2} = 2.021ksi$$

Hot Rolled 1020 Steel[18]:
$S_{ut}$ - Ultimate Tensile Strength = 55 ksi
$S_y$ - Yield Strength = 30 ksi
$\tau_{all}$ = min[0.30*55, 0.40*30ksi] = 16.5ksi

$$FOS = \frac{16.5ksi}{2.021ksi} = 8.2$$

# APPENDIX H

## Engineering Drawings

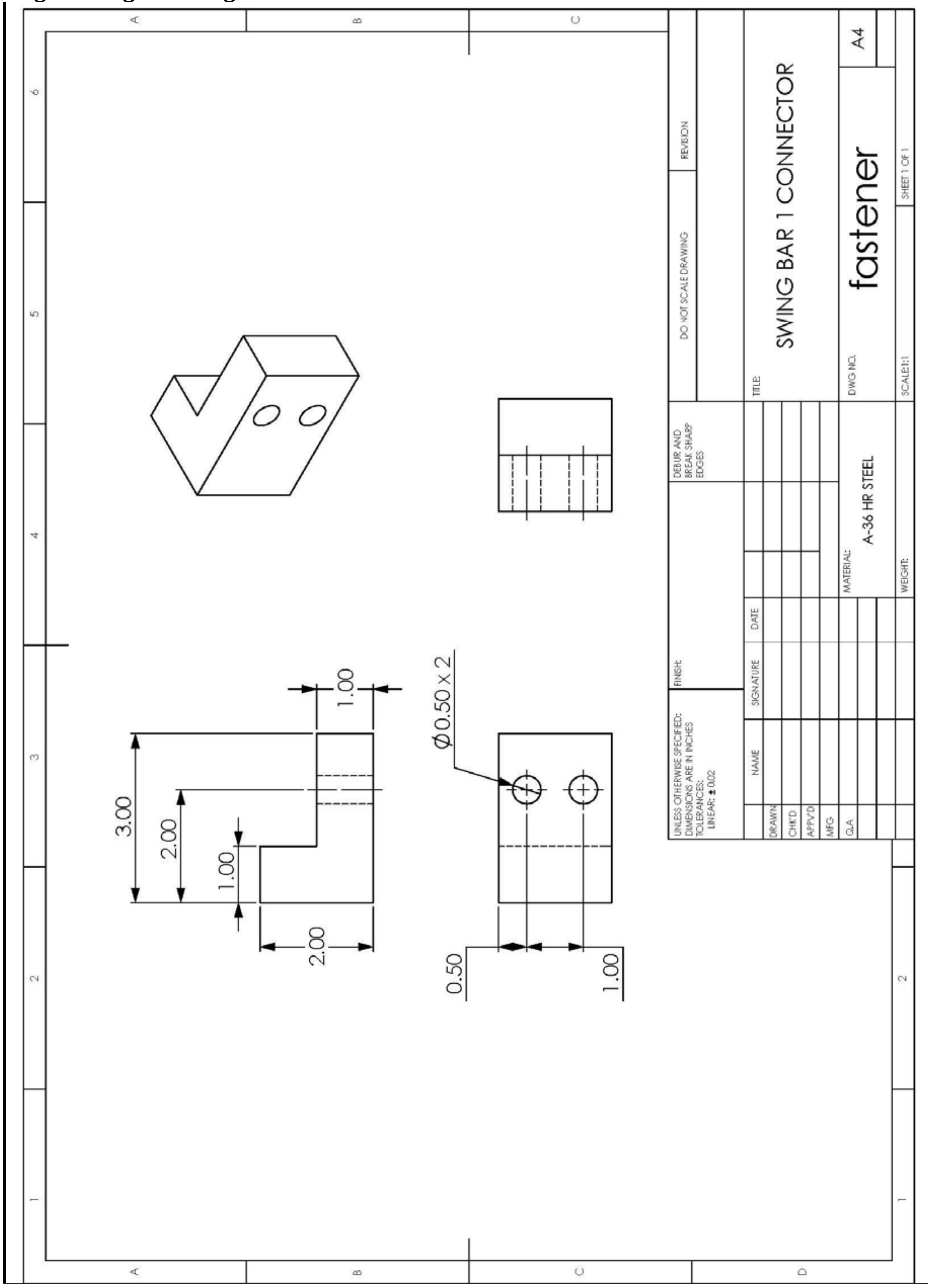

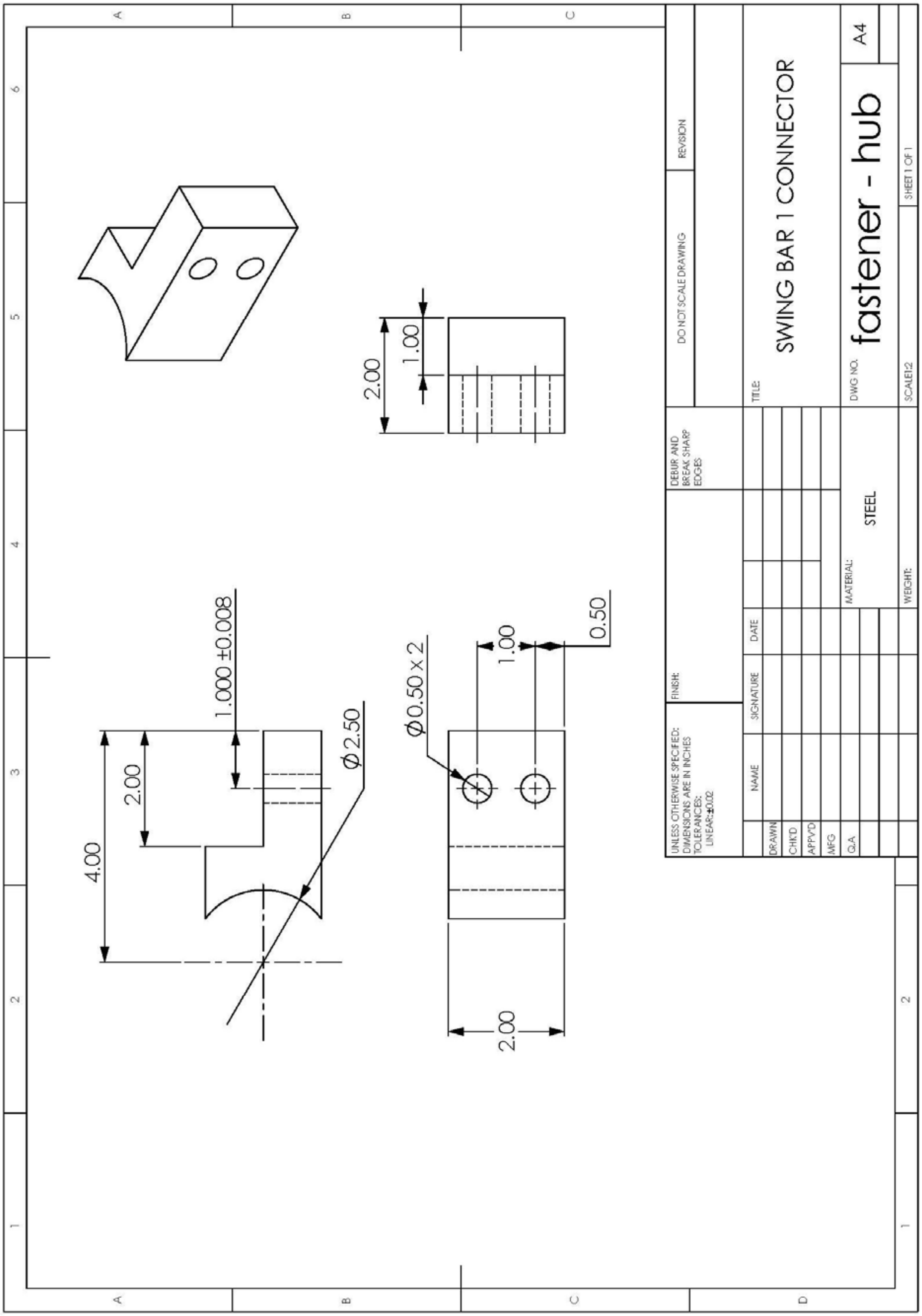
4.00
2.00
1.000 ±0.008
Ø2.50
Ø0.50 x 2
1.00
0.50
2.00
2.00
1.00
UNLESS OTHERWISE SPECIFIED:
DIMENSIONS ARE IN INCHES
TOLERANCES:
LINEAR: ±0.02
FINISH:
DEBUR AND BREAK SHARP EDGES
DO NOT SCALE DRAWING
REVISION
NAME
SIGNATURE
DATE
DRAWN
CHK'D
APPV'D
MFG
Q.A
TITLE:
SWING BAR 1 CONNECTOR
MATERIAL:
STEEL
DWG NO.
fastener - hub
A4
WEIGHT:
SCALE1:2
SHEET 1 OF 1
A
B
C
D
1
2
3
4
5
6

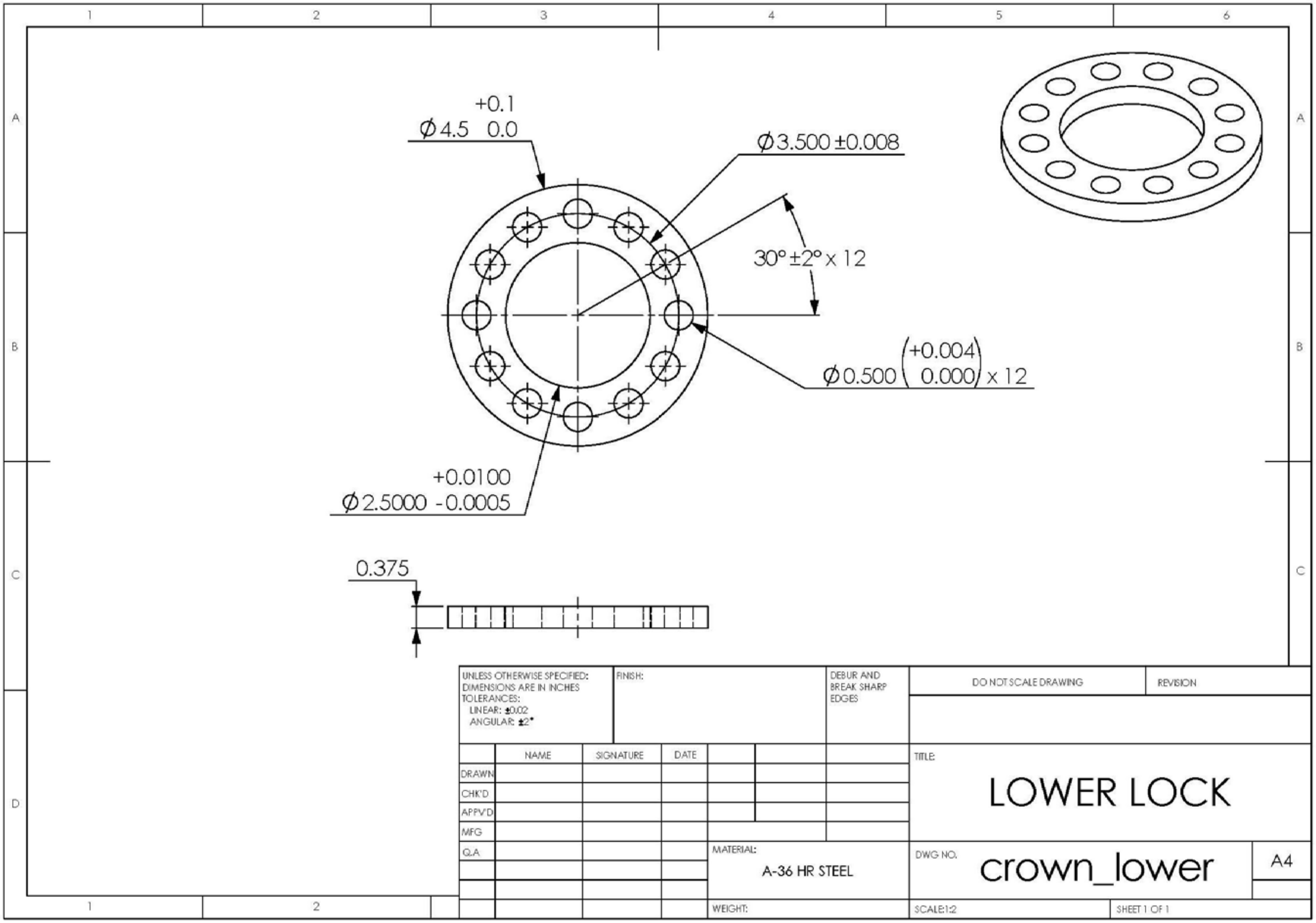
1
2
3
4
5
6
A
B
C
D
+0.1
Ø4.5 0.0
Ø3.500 ±0.008
30° ±2° x 12
Ø0.500 (+0.004 0.000) x 12
+0.0100
Ø2.5000 -0.0005
0.375
UNLESS OTHERWISE SPECIFIED:
DIMENSIONS ARE IN INCHES
TOLERANCES:
LINEAR: ±0.02
ANGULAR: ±2°
FINISH:
DEBUR AND BREAK SHARP EDGES
DO NOT SCALE DRAWING
REVISION
NAME
SIGNATURE
DATE
DRAWN
CHK'D
APPV'D
MFG
Q.A
MATERIAL:
A-36 HR STEEL
WEIGHT:
TITLE:
LOWER LOCK
DWG NO.
crown_lower
A4
SCALE:1:2
SHEET 1 OF 1

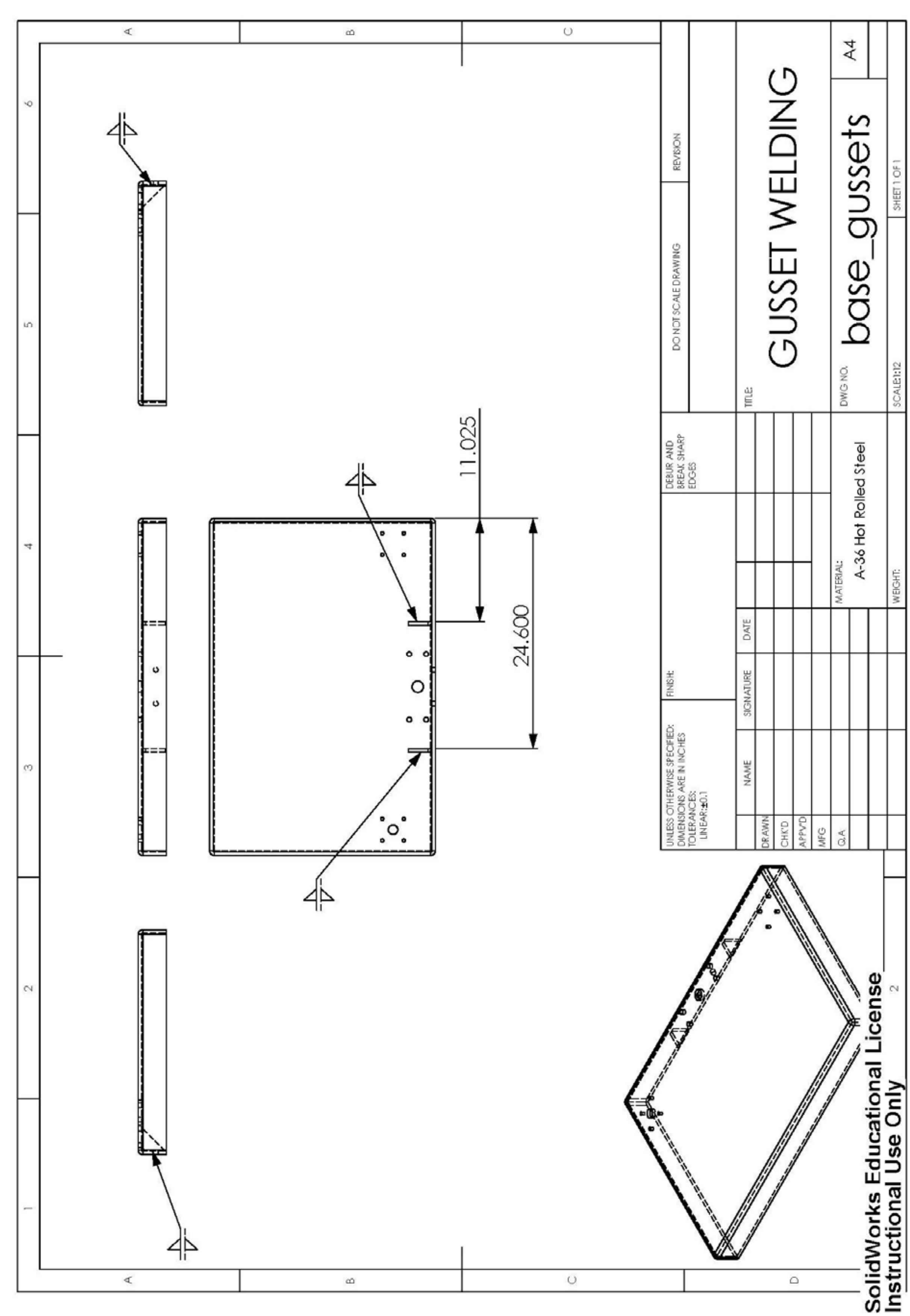11.025
24.600
UNLESS OTHERWISE SPECIFIED:
DIMENSIONS ARE IN INCHES
TOLERANCES:
LINEAR:±0.1
FINISH:
DEBUR AND BREAK SHARP EDGES
DO NOT SCALE DRAWING
REVISION
NAME
SIGNATURE
DATE
DRAWN
CHK'D
APPV'D
MFG
Q.A
TITLE:
GUSSET WELDING
MATERIAL:
A-36 Hot Rolled Steel
DWG NO.
base_gussets
A4
WEIGHT:
SCALE:1:12
SHEET 1 OF 1
A
B
C
D
1
2
3
4
5
6

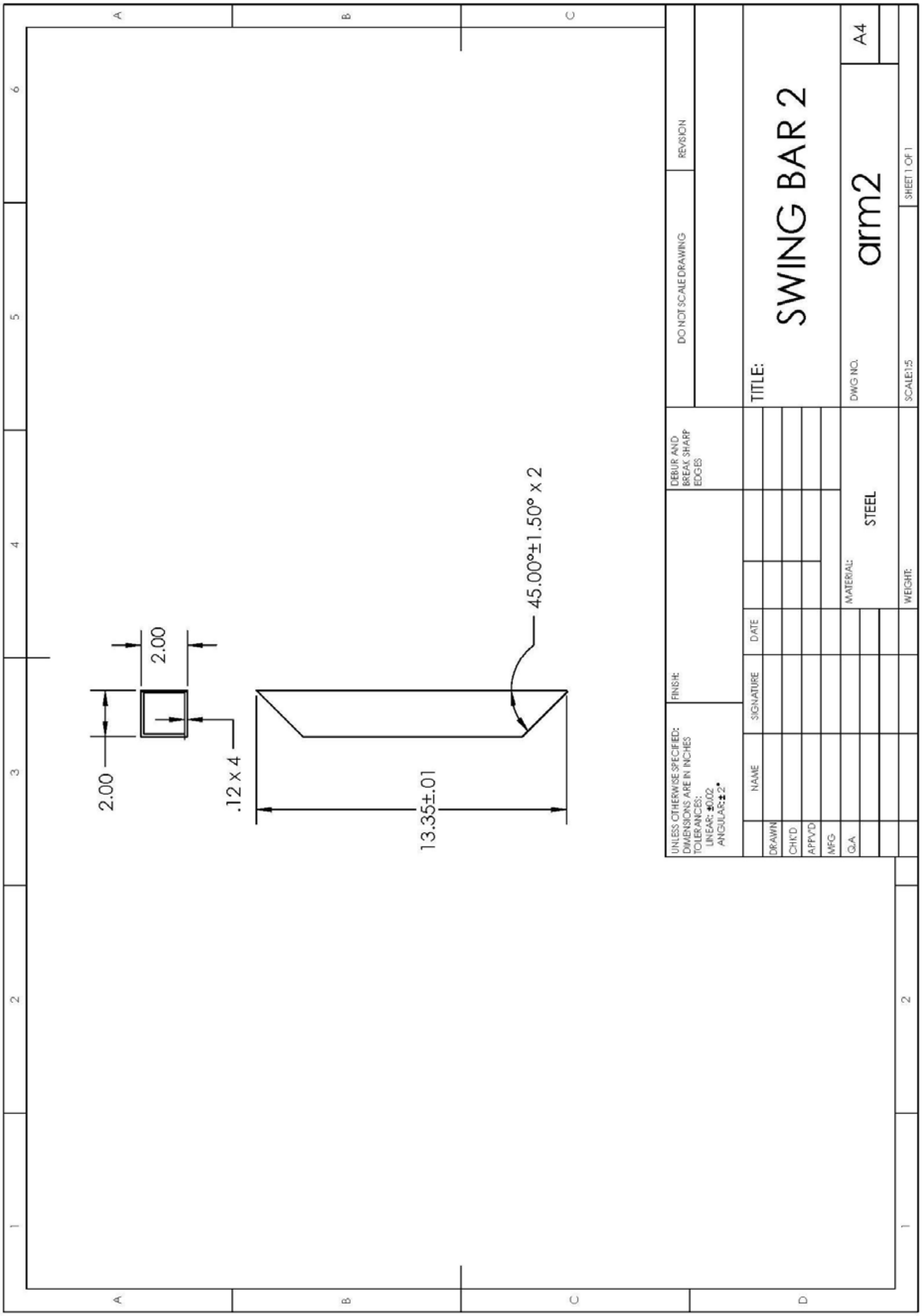
2.00
2.00
.12 x 4
13.35±.01
45.00°±1.50° x 2
UNLESS OTHERWISE SPECIFIED:
DIMENSIONS ARE IN INCHES
TOLERANCES:
LINEAR: ±0.02
ANGULAR: ±2°
FINISH:
DEBUR AND BREAK SHARP EDGES
DO NOT SCALE DRAWING
REVISION
NAME
SIGNATURE
DATE
DRAWN
CHK'D
APPV'D
MFG
Q.A
MATERIAL:
STEEL
WEIGHT:
TITLE:
SWING BAR 2
DWG NO.
arm2
A4
SCALE:1:5
SHEET 1 OF 1

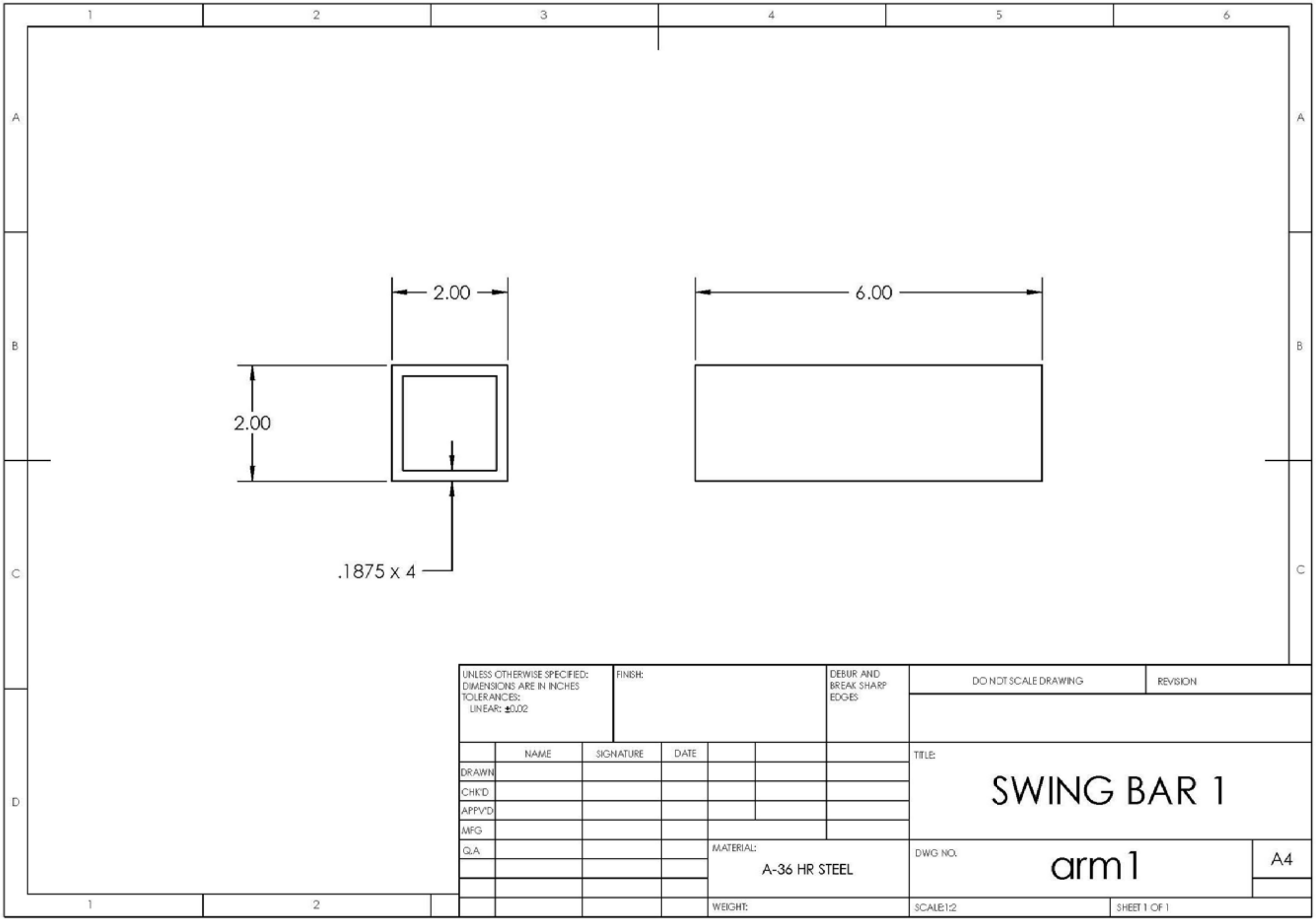

UNLESS OTHERWISE SPECIFIED:
DIMENSIONS ARE IN INCHES
TOLERANCES:
LINEAR: ±0.02

FINISH:

DEBUR AND
BREAK SHARP
EDGES

DO NOT SCALE DRAWING

REVISION

| | NAME | SIGNATURE | DATE |
|---|---|---|---|
| DRAWN | | | |
| CHK'D | | | |
| APPV'D | | | |
| MFG | | | |
| Q.A | | | |

TITLE:

SWING BAR 1

MATERIAL:
A-36 HR STEEL

DWG NO.
arm1

A4

WEIGHT:

SCALE:1:2

SHEET 1 OF 1

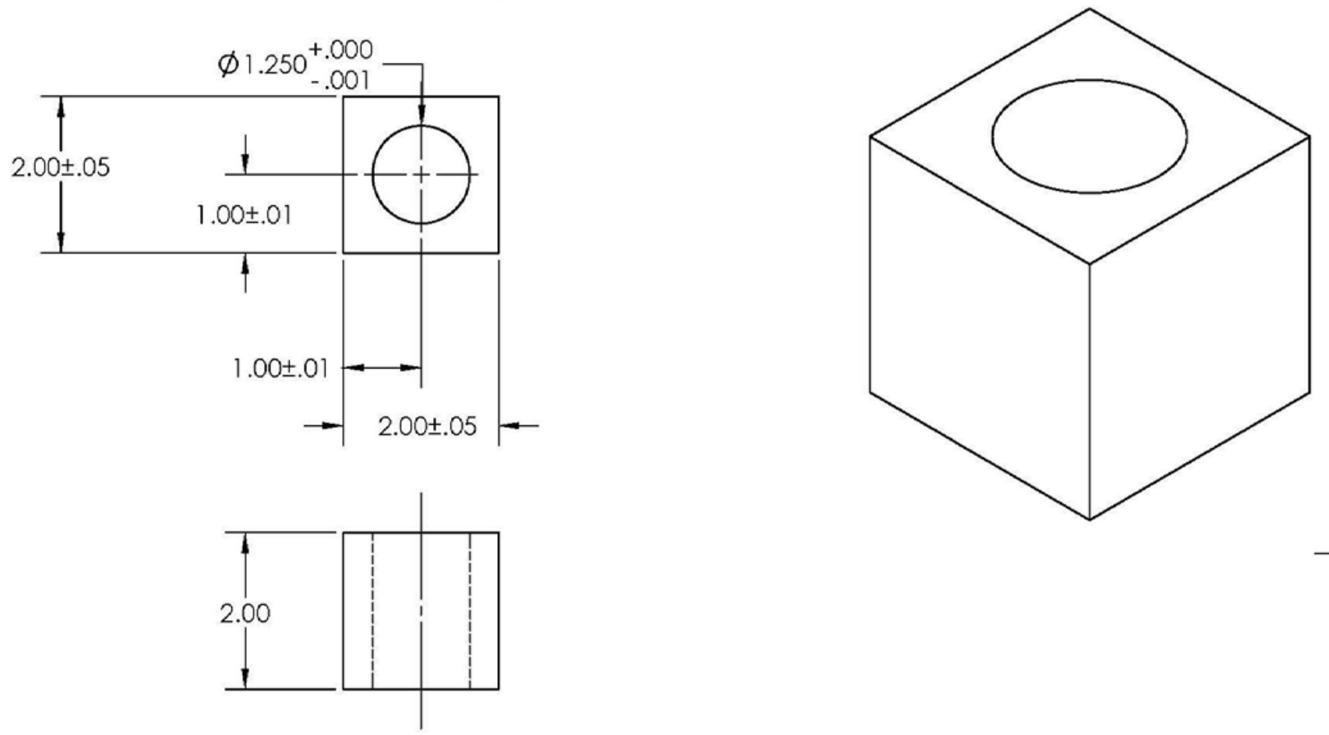

UNLESS OTHERWISE SPECIFIED:
DIMENSIONS ARE IN INCHES
TOLERANCES:
LINEAR: ±0.02

FINISH:

DEBUR AND BREAK SHARP EDGES

DO NOT SCALE DRAWING

REVISION

| | NAME | SIGNATURE | DATE |
|---|---|---|---|
| DRAWN | | | |
| CHK'D | | | |
| APPV'D | | | |
| MFG | | | |
| Q.A | | | |

MATERIAL:
A-36 HR STEEL

WEIGHT:

TITLE:

# FRONT JOINT

DWG NO.
arm joint

A4

SCALE:1:1

SHEET 1 OF 1

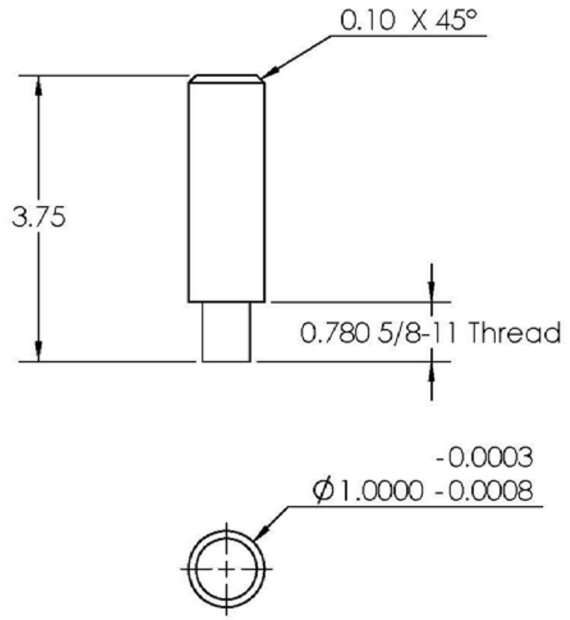

UNLESS OTHERWISE SPECIFIED:
DIMENSIONS ARE IN INCHES
TOLERANCES:
LINEAR: ±0.02
ANGULAR: ±3

FINISH:

DEBUR AND BREAK SHARP EDGES

DO NOT SCALE DRAWING

REVISION

| | NAME | SIGNATURE | DATE |
|---|---|---|---|
| DRAWN | | | |
| CHK'D | | | |
| APPV'D | | | |
| MFG | | | |
| Q.A | | | |

TITLE:

# FRONT PIVOT SHAFT

MATERIAL: AISI 1566 Steel

DWG NO. arm joint shaft

A4

WEIGHT:

SCALE:1:1

SHEET 1 OF 1

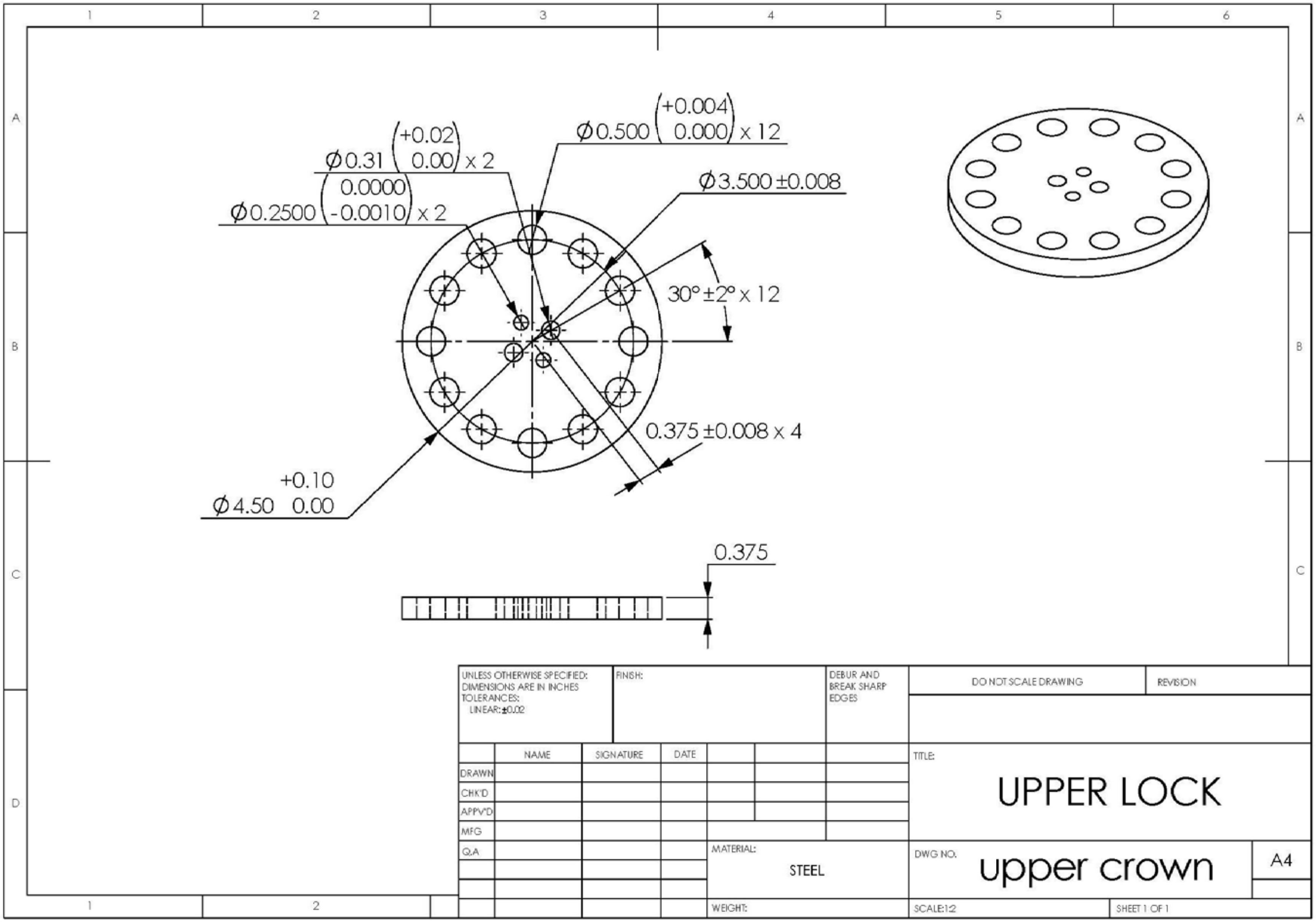

UNLESS OTHERWISE SPECIFIED:
DIMENSIONS ARE IN INCHES
TOLERANCES:
LINEAR: ±0.02

FINISH:

DEBUR AND BREAK SHARP EDGES

DO NOT SCALE DRAWING

REVISION

| | NAME | SIGNATURE | DATE |
|---|---|---|---|
| DRAWN | | | |
| CHK'D | | | |
| APPV'D | | | |
| MFG | | | |
| Q.A | | | |

MATERIAL: STEEL

WEIGHT:

TITLE: UPPER LOCK

DWG NO. upper crown

A4

SCALE:1:2

SHEET 1 OF 1

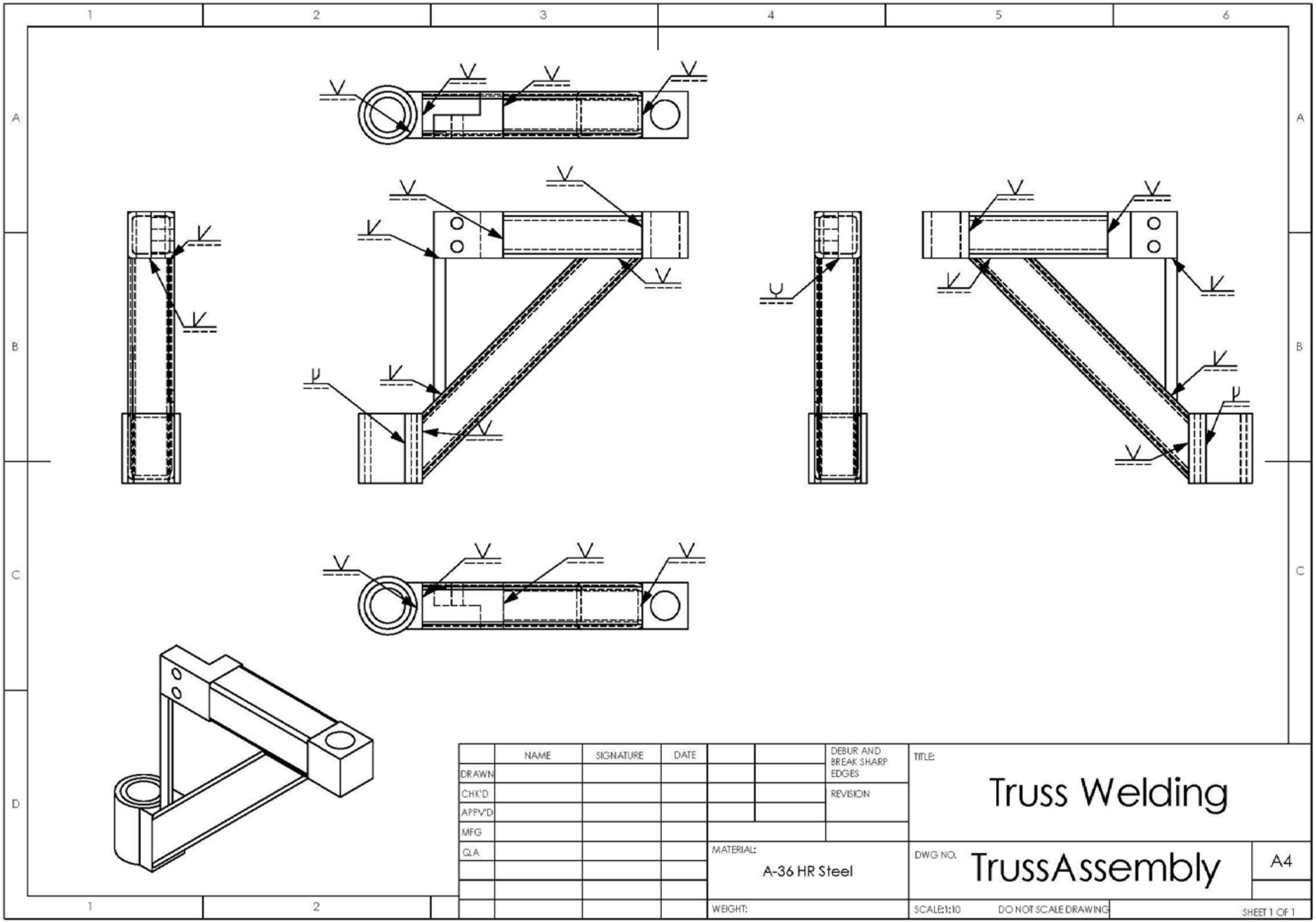
1
2
3
4
5
6
A
B
C
D
NAME
SIGNATURE
DATE
DRAWN
CHK'D
APPV'D
MFG
Q.A
DEBUR AND BREAK SHARP EDGES
REVISION
MATERIAL:
A-36 HR Steel
WEIGHT:
TITLE:
Truss Welding
DWG NO.
TrussAssembly
A4
SCALE:1:10
DO NOT SCALE DRAWING
SHEET 1 OF 1

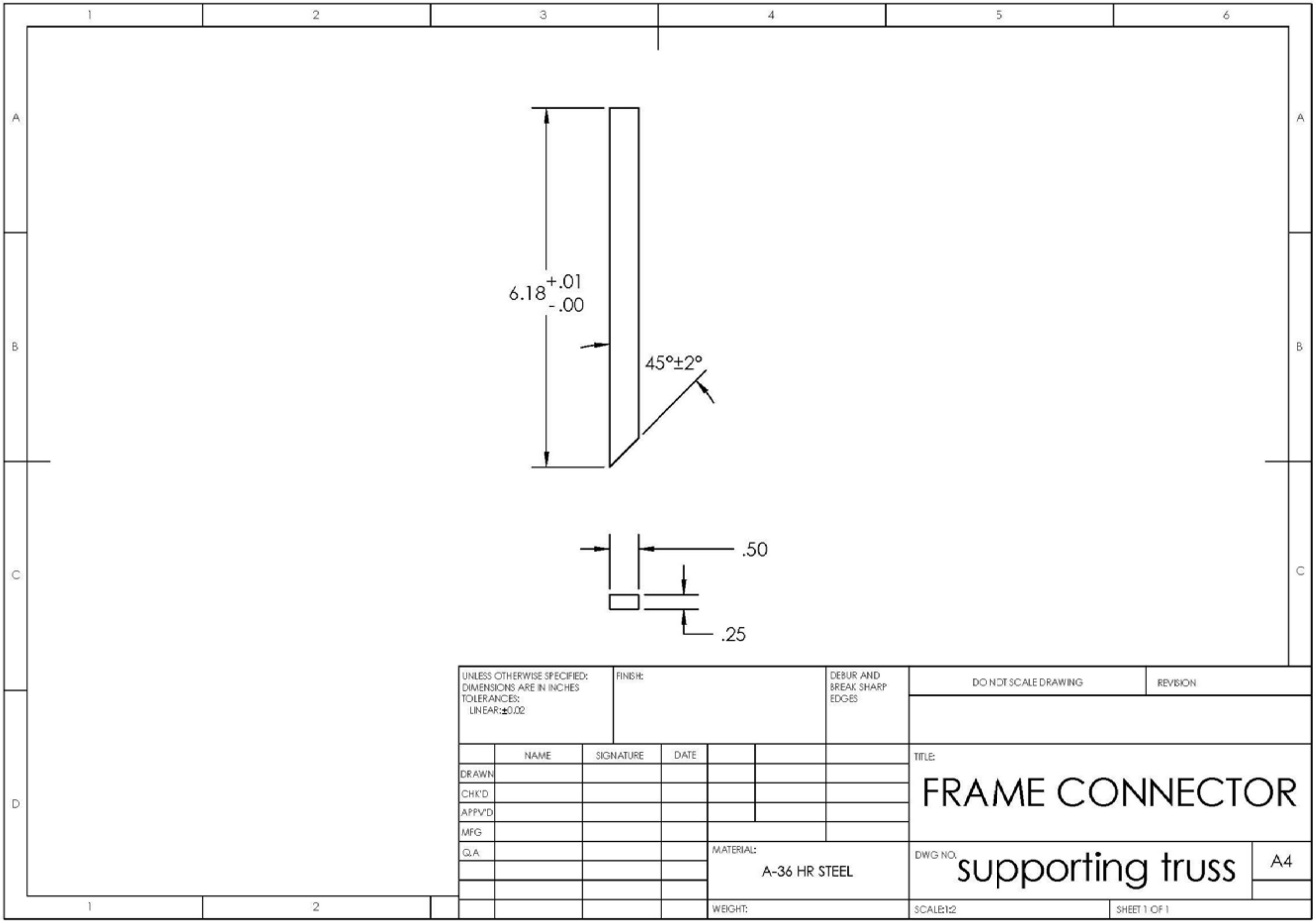

UNLESS OTHERWISE SPECIFIED:
DIMENSIONS ARE IN INCHES
TOLERANCES:
LINEAR: ±0.02

FINISH:

DEBUR AND BREAK SHARP EDGES

DO NOT SCALE DRAWING

REVISION

| | NAME | SIGNATURE | DATE |
|---|---|---|---|
| DRAWN | | | |
| CHK'D | | | |
| APPV'D | | | |
| MFG | | | |
| Q.A | | | |

MATERIAL:
A-36 HR STEEL

WEIGHT:

TITLE:
# FRAME CONNECTOR

DWG NO. supporting truss

A4

SCALE:1:2

SHEET 1 OF 1

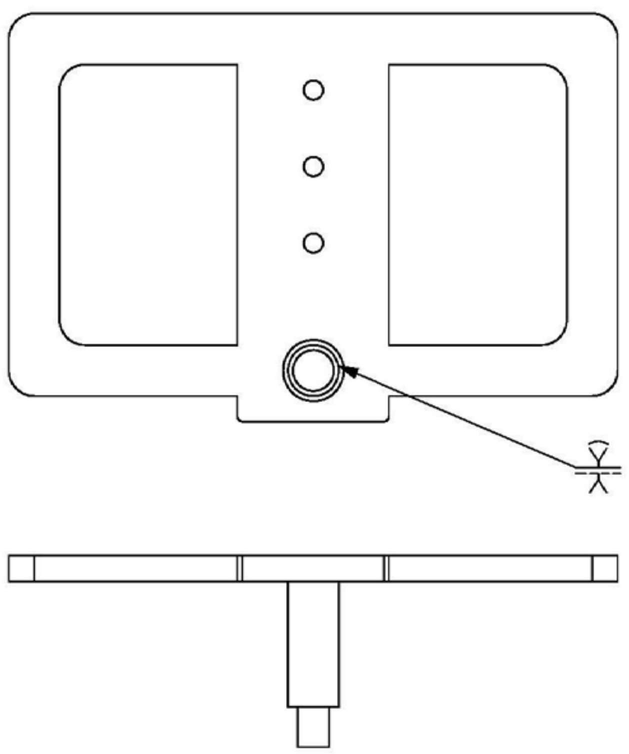

| | NAME | SIGNATURE | DATE |
|---|---|---|---|
| DRAWN | | | |
| CHK'D | | | |
| APPV'D | | | |
| MFG | | | |
| Q.A | | | |

DEBUR AND
BREAK SHARP
EDGES

REVISION

MATERIAL:

WEIGHT:

TITLE:

# SEAT - SHAFT WELD

DWG NO. steel_seat_shaft

A4

SCALE:1:3 DO NOT SCALE DRAWING SHEET 1 OF 1

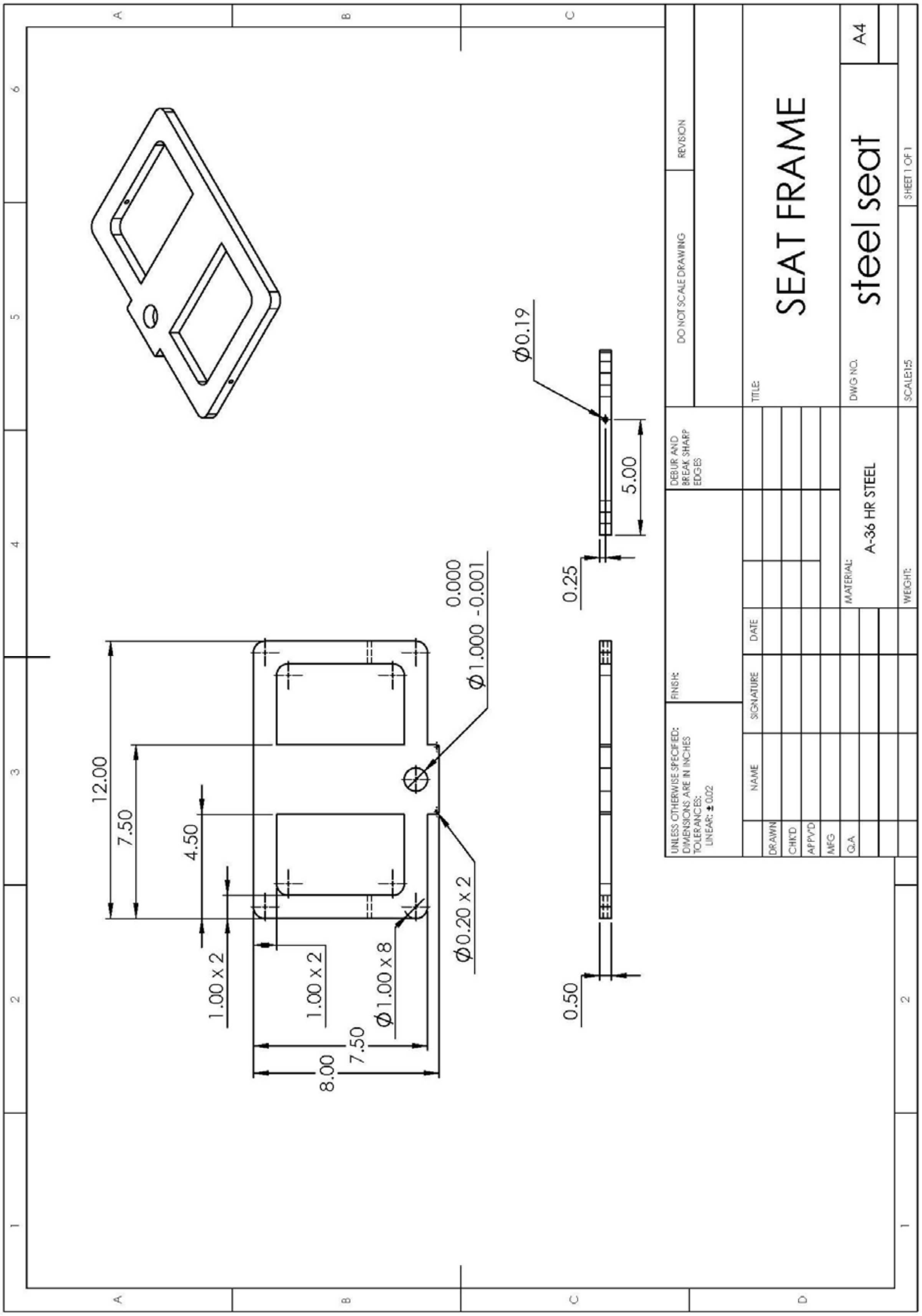
12.00
7.50
4.50
1.00 x 2
1.00 x 2
Ø1.00 x 8
Ø0.20 x 2
0.000
Ø1.000 -0.001
8.00
7.50
0.50
0.25
5.00
Ø0.19
UNLESS OTHERWISE SPECIFIED:
DIMENSIONS ARE IN INCHES
TOLERANCES:
LINEAR: ± 0.02
FINISH:
DEBUR AND BREAK SHARP EDGES
DO NOT SCALE DRAWING
REVISION
NAME
SIGNATURE
DATE
DRAWN
CHK'D
APPV'D
MFG
Q.A
MATERIAL:
A-36 HR STEEL
WEIGHT:
TITLE:
SEAT FRAME
DWG NO.
steel seat
A4
SCALE:1:5
SHEET 1 OF 1

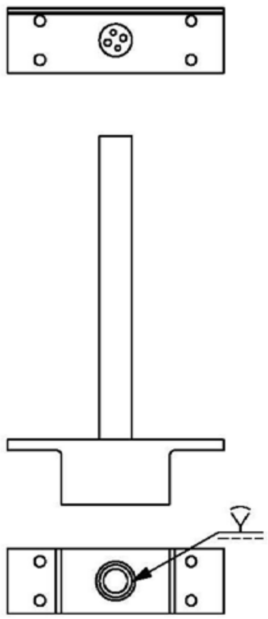

UNLESS OTHERWISE SPECIFIED:
DIMENSIONS ARE IN MILLIMETERS
SURFACE FINISH:
TOLERANCES:
LINEAR:
ANGULAR:

FINISH:

DEBUR AND BREAK SHARP EDGES

DO NOT SCALE DRAWING

REVISION

| | NAME | SIGNATURE | DATE |
|---|---|---|---|
| DRAWN | | | |
| CHK'D | | | |
| APPV'D | | | |
| MFG | | | |
| Q.A | | | |

TITLE:

MATERIAL:

DWG NO. shaft_base_weld

A4

WEIGHT:

SCALE:1:1

SHEET 1 OF 1

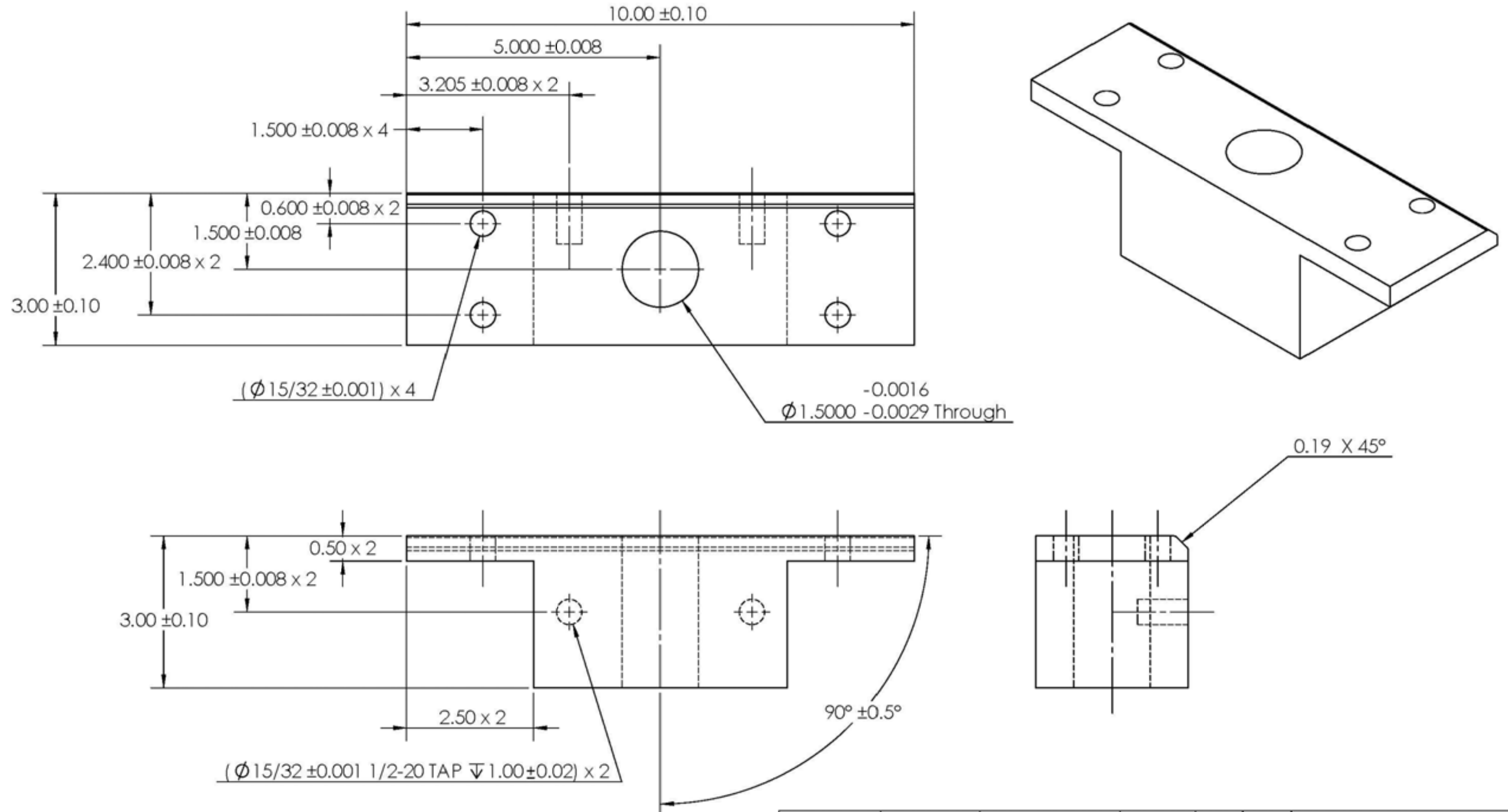

**PROPRIETARY AND CONFIDENTIAL**

THE INFORMATION CONTAINED IN THIS DRAWING IS THE SOLE PROPERTY OF UNIVERSITY OF MICHIGAN. ANY REPRODUCTION IN PART OR AS A WHOLE WITHOUT THE WRITTEN PERMISSION OF SURGERY LIFT TEAM B IS PROHIBITED.

| | |
|---|---|
| | |
| | |
| | |
| | |
| | |
| | |
| NEXT ASSY | USED ON |
| APPLICATION | |

UNLESS OTHERWISE SPECIFIED:

DIMENSIONS ARE IN INCHES
UNLESS OTHERWISE STATED ALL
TOLERANCES ARE:
FRACTIONAL±0.02
ANGULAR: ±1°

INTERPRET GEOMETRIC
TOLERANCING PER:

MATERIAL: Steel

FINISH

DO NOT SCALE DRAWING

| | NAME | DATE |
|---|---|---|
| DRAWN | | |
| CHECKED | | |
| ENG APPR. | | |
| MFG APPR. | | |
| Q.A. | | |

COMMENTS:

TITLE: BASE BLOCK

| SIZE | DWG. NO. | REV |
|---|---|---|
| **B** | shaft_base_support | |
| SCALE: 1:2 | WEIGHT: | SHEET 1 OF 1 |

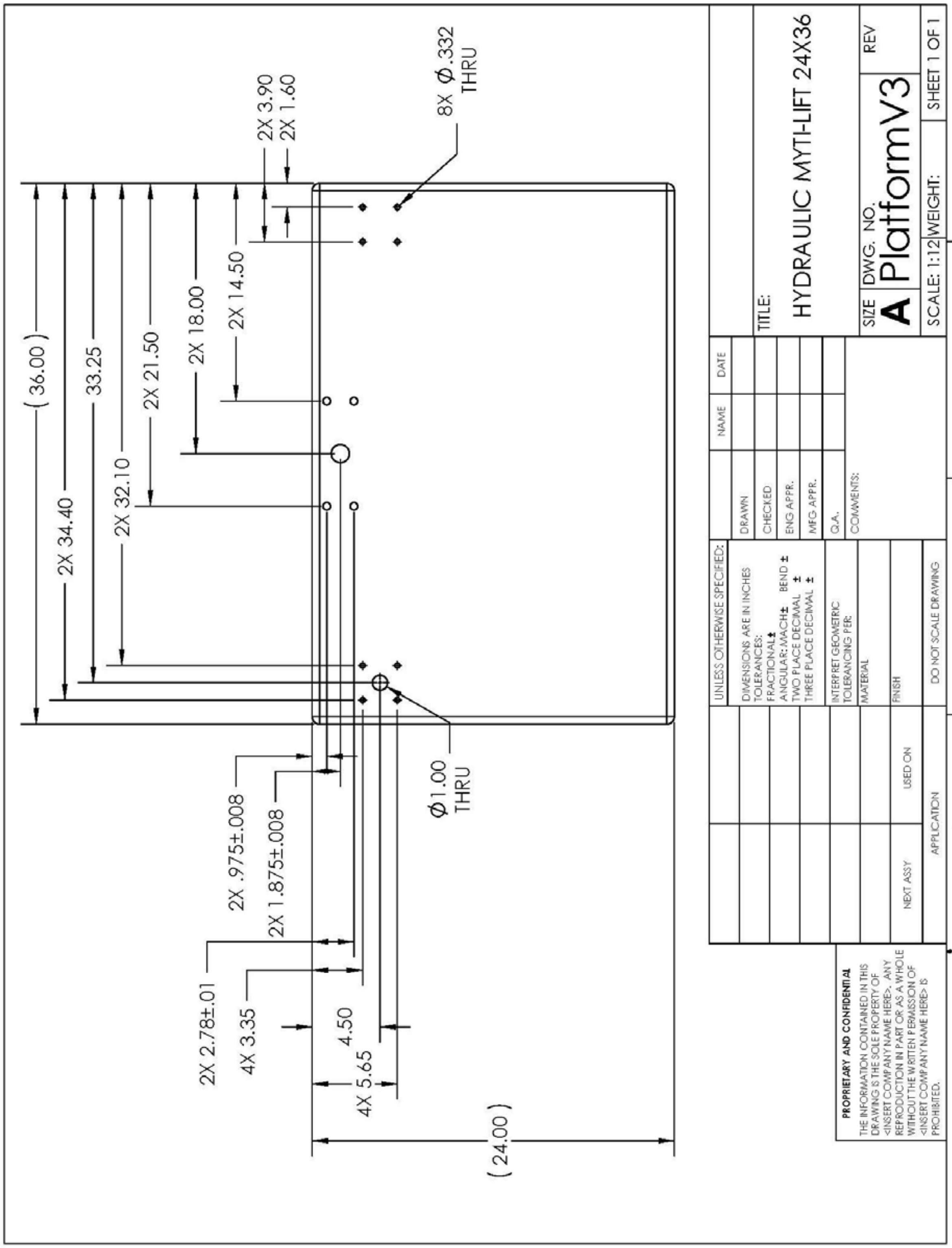
( 36.00 )
2X 34.40
33.25
2X 32.10
2X 21.50
2X 18.00
2X 14.50
2X 3.90
2X 1.60
8X Ø.332 THRU
Ø1.00 THRU
2X .975±.008
2X 1.875±.008
2X 2.78±.01
4X 3.35
4.50
4X 5.65
( 24.00 )
UNLESS OTHERWISE SPECIFIED:
DIMENSIONS ARE IN INCHES
TOLERANCES:
FRACTIONAL±
ANGULAR: MACH± BEND ±
TWO PLACE DECIMAL ±
THREE PLACE DECIMAL ±
INTERPRET GEOMETRIC TOLERANCING PER:
MATERIAL
FINISH
DO NOT SCALE DRAWING
NEXT ASSY
USED ON
APPLICATION
NAME
DATE
DRAWN
CHECKED
ENG APPR.
MFG APPR.
Q.A.
COMMENTS:
TITLE:
HYDRAULIC MYTI-LIFT 24X36
SIZE
A
DWG. NO.
PlatformV3
REV
SCALE: 1:12
WEIGHT:
SHEET 1 OF 1
PROPRIETARY AND CONFIDENTIAL
THE INFORMATION CONTAINED IN THIS DRAWING IS THE SOLE PROPERTY OF <INSERT COMPANY NAME HERE>. ANY REPRODUCTION IN PART OR AS A WHOLE WITHOUT THE WRITTEN PERMISSION OF <INSERT COMPANY NAME HERE> IS PROHIBITED.
5
4
3
2
1

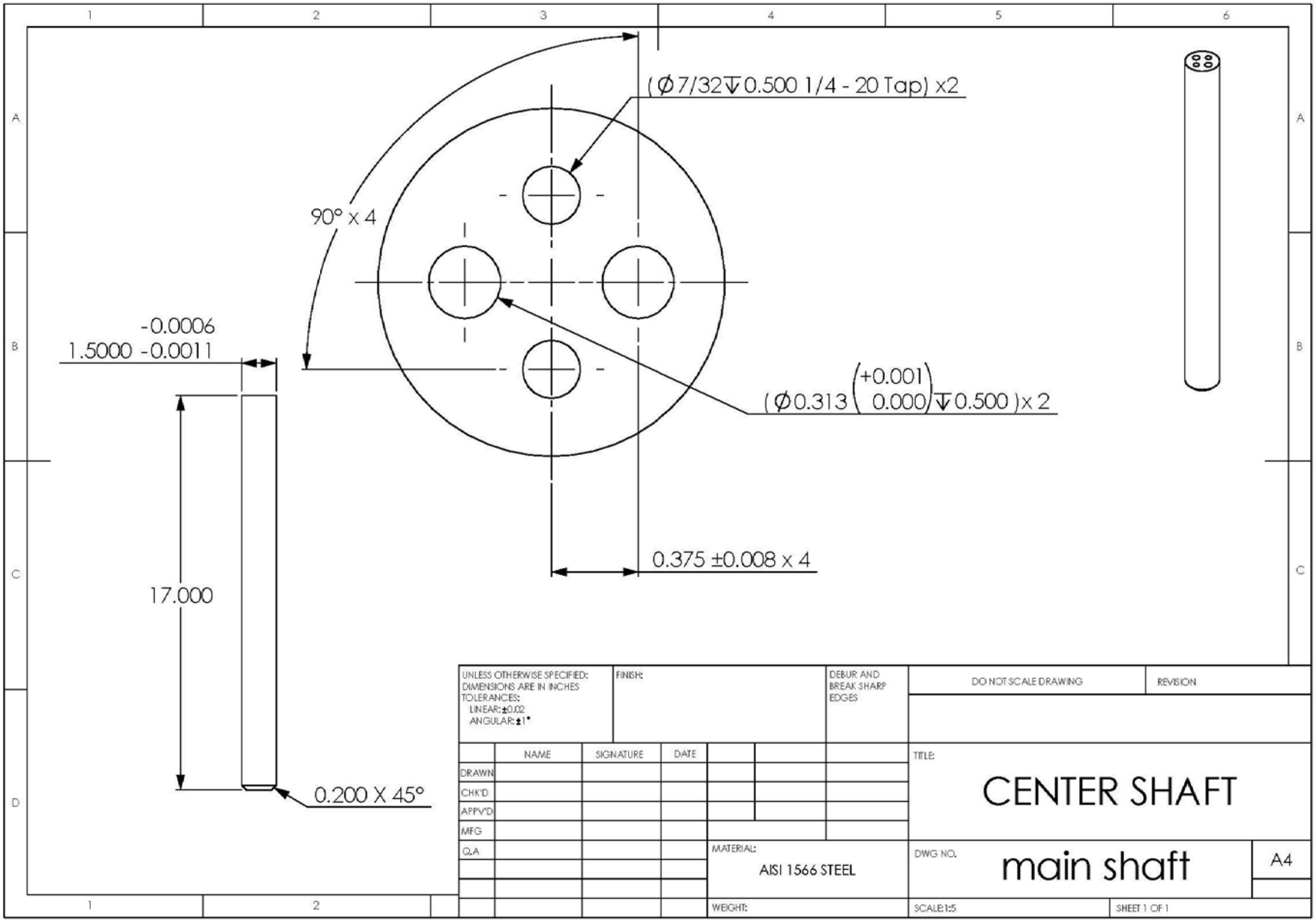
1
2
3
4
5
6
A
B
C
D
(Ø7/32↧0.500 1/4 - 20 Tap) x2
90° x 4
-0.0006
1.5000 -0.0011
(Ø0.313 (+0.001 0.000) ↧0.500 ) x 2
0.375 ±0.008 x 4
17.000
0.200 X 45°
UNLESS OTHERWISE SPECIFIED:
DIMENSIONS ARE IN INCHES
TOLERANCES:
LINEAR: ±0.02
ANGULAR: ±1°
FINISH:
DEBUR AND BREAK SHARP EDGES
DO NOT SCALE DRAWING
REVISION
NAME
SIGNATURE
DATE
DRAWN
CHK'D
APPV'D
MFG
Q.A
MATERIAL:
AISI 1566 STEEL
WEIGHT:
TITLE:
CENTER SHAFT
DWG NO.
main shaft
A4
SCALE:1:5
SHEET 1 OF 1

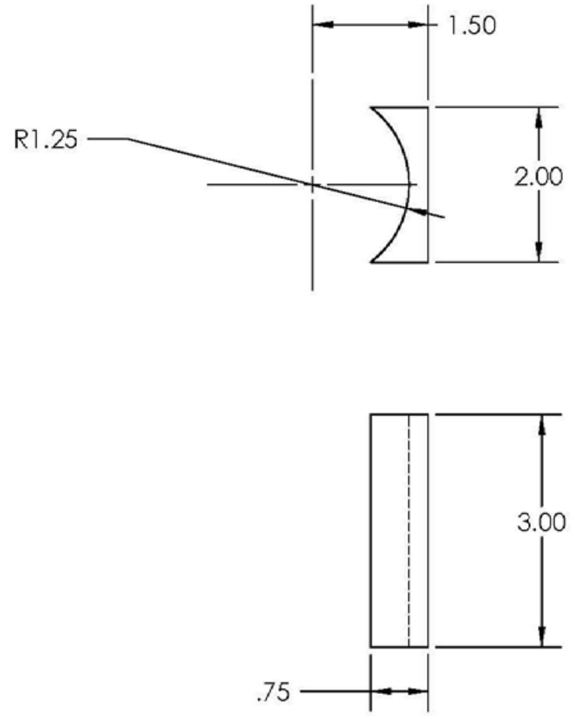

LINEAR:UNLESS OTHERWISE SPECIFIED ALL DIMENSIONS ARE IN INCHES
TOLERANCES:
LINEAR:±0.02

FINISH:

DEBUR AND BREAK SHARP EDGES

DO NOT SCALE DRAWING

REVISION

|  | NAME | SIGNATURE | DATE |
|---|---|---|---|
| DRAWN |  |  |  |
| CHK'D |  |  |  |
| APPV'D |  |  |  |
| MFG |  |  |  |
| Q.A |  |  |  |

TITLE:

# LOWER HUB FILLET

MATERIAL:
A-36 HR STEEL

DWG NO. lowerhub_arm_connector

A4

WEIGHT:

SCALE:1:2

SHEET 1 OF 1

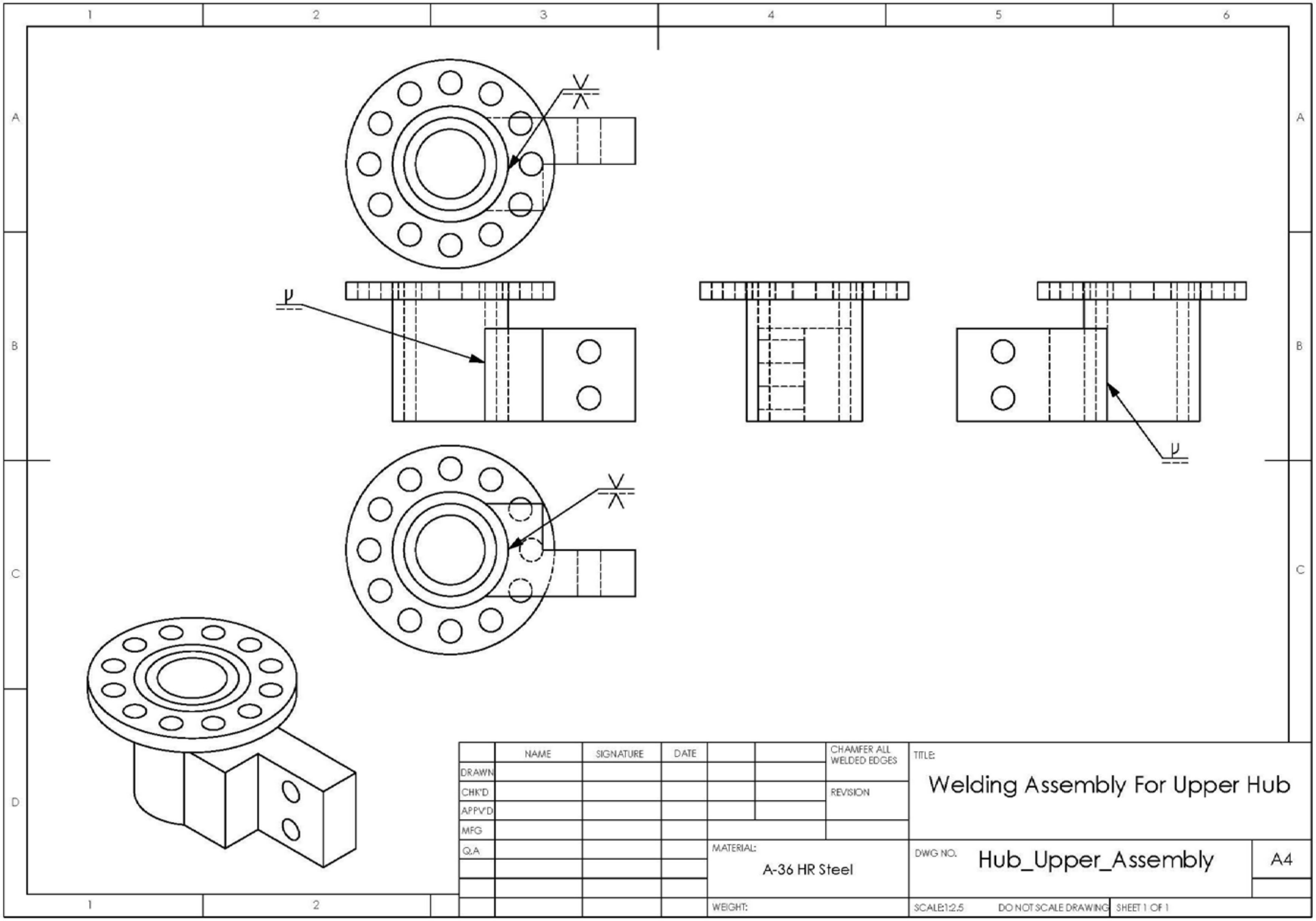

| | NAME | SIGNATURE | DATE | | | CHAMFER ALL WELDED EDGES |
|---|---|---|---|---|---|---|
| DRAWN | | | | | | REVISION |
| CHK'D | | | | | | |
| APPV'D | | | | | | |
| MFG | | | | | | |
| Q.A | | | | MATERIAL: A-36 HR Steel | | |
| | | | | WEIGHT: | | |

TITLE:

Welding Assembly For Upper Hub

DWG NO. Hub_Upper_Assembly

A4

SCALE:1:2.5

DO NOT SCALE DRAWING

SHEET 1 OF 1

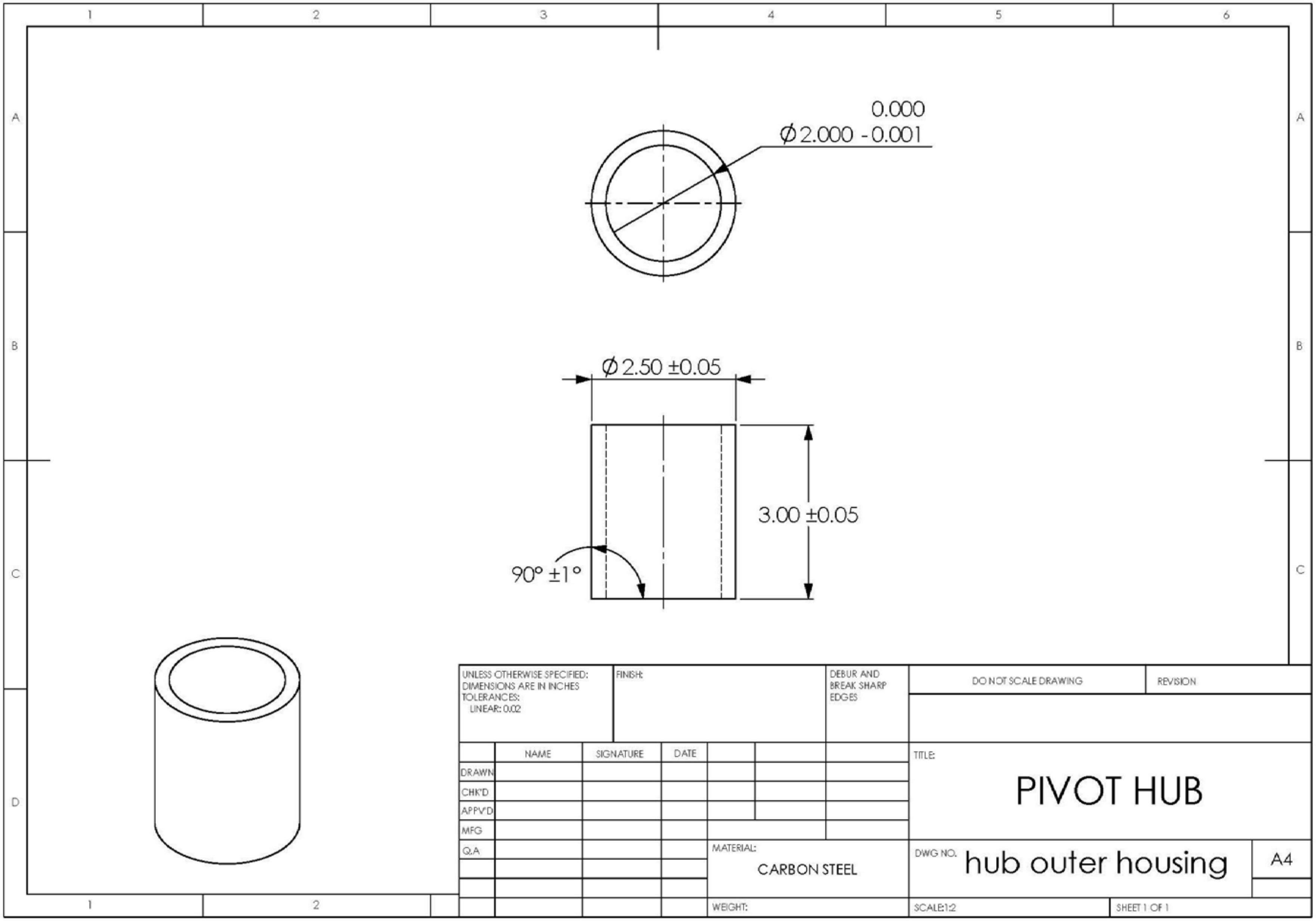

UNLESS OTHERWISE SPECIFIED:
DIMENSIONS ARE IN INCHES
TOLERANCES:
LINEAR: 0.02

FINISH:

DEBUR AND BREAK SHARP EDGES

DO NOT SCALE DRAWING

REVISION

| | NAME | SIGNATURE | DATE |
|---|---|---|---|
| DRAWN | | | |
| CHK'D | | | |
| APPV'D | | | |
| MFG | | | |
| Q.A | | | |

MATERIAL:
CARBON STEEL

WEIGHT:

TITLE:

# PIVOT HUB

DWG NO. hub outer housing

A4

SCALE:1:2

SHEET 1 OF 1

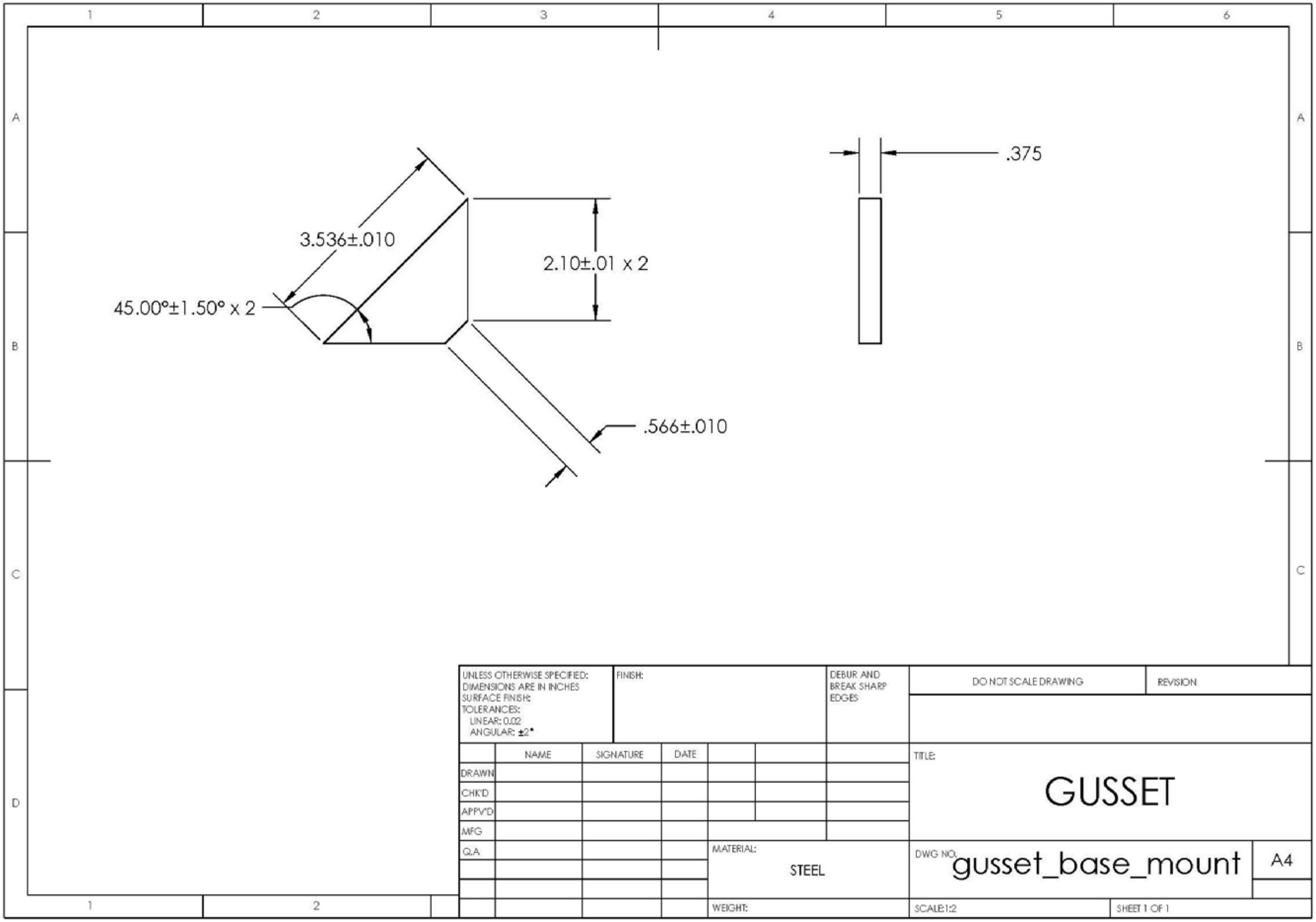
1
2
3
4
5
6
A
B
C
D
3.536±.010
45.00°±1.50° x 2
2.10±.01 x 2
.566±.010
.375
UNLESS OTHERWISE SPECIFIED:
DIMENSIONS ARE IN INCHES
SURFACE FINISH:
TOLERANCES:
LINEAR: 0.02
ANGULAR: ±2°
FINISH:
DEBUR AND
BREAK SHARP
EDGES
DO NOT SCALE DRAWING
REVISION
NAME
SIGNATURE
DATE
DRAWN
CHK'D
APPV'D
MFG
Q.A
TITLE:
GUSSET
MATERIAL:
STEEL
DWG NO.
gusset_base_mount
A4
WEIGHT:
SCALE:1:2
SHEET 1 OF 1

## APPENDIX I
## Manufacturing Plans

| Part | No. | Machine or Device | Activity or Tool | Parameters | RPM and feed | Tolerance |
|---|---|---|---|---|---|---|
| Arm 1 | 1 | Scribe and Ruller | Mark length to be cut | 6" long | | ±0.2" |
| | 2 | Band Saw | Cut the tube, follow drawn line | 6" long | | ±0.2" |
| | 3 | Hand-File | File off sharp edges | Rough File | | none |
| Arm 2 | 1 | Scribe and Ruller | Mark length to be cut | 13.35" long, 45° angle | | ±0.2" length, ±1.5° angle |
| | 2 | Vertical/Horizontal Band Saw | Cut the tube | 13.35" long | | ±0.2" length |
| | 3 | Horizontal Bandsaw | Cut the tube with 45° angle | 45° angle, 9.45" short side | | ±0.2" length, ±1.5° angle |
| | 4 | Hand-File | File off sharp edges | Rough File | | none |
| Arm Joint | 1 | Scribe and Ruller | Mark length to be cut | 2" x 2" | | ±0.2" length |
| | 2 | Vertical/Horizontal Band Saw | Cut the block | 2" x 2" | | ±0.2" length |
| | 3 | Mill | Machine sides of block till flat, 4 flute 2" face mill 0.75"dia | 2" x 2" | RPM=410, f=0.04"/s | ±0.5" length |
| | 4 | Mill | Find edge of block, find Center | 1" from each datum | | ±0.01" length |
| | 5 | Mill | Position center, use center drill to mark center | 1" from each datum | | ±0.01" length |
| | 6 | Mill | Drill hole with 1 16/64"dia at marked center | 1" from each datum | RPM=1000, f=0.08"/s | ±0.01" length |
| | 7 | Mill | Ream hole with 1.25" reamer | 1" from each datum | RPM=50, f=0.26"/s | ±0.01" length |
| | 8 | Deburr | Deburr the hole | none | | none |
| | 9 | Hand-File | File off sharp edges | Rough File | | none |

| Part | No. | Machine or Device | Activity or Tool | Parameters | RPM and feed | Tolerance |
|---|---|---|---|---|---|---|
| Arm joint shaft | 1 | Scribe and Ruller | Mark length to be cut | 3.75" |  | ±0.2" length |
|  | 2 | Angle Grinder<br>Vertical Band Saw | Cut the shaft | 3.75" |  | ±0.2" length |
|  | 3 | Angle Grinder | Grinde edge of shaft to be welded |  |  |  |
| Fastener | 1 | Scribe and Ruller | Mark length to be cut | 2" x 3" |  | ±0.2" length |
|  | 2 | Vertical/Horizontal Band Saw | Cut the block | 2" x 3" |  | ±0.2" length |
|  | 3 | Mill | Face mill sides of block till flat, 4 flute 2" face mill 0.75"dia | 2" x 3" | RPM=410, f=0.04"/s | ±0.02" length |
|  | 4 | Mill | Face mill 2" long, 1" deep for connector, 4 flute 0.75"dia | refer to drawing | RPM=410, f=0.04"/s | ±0.02" length |
|  | 5 | Mill | Drill 2 clearance hole with 1 1/32" drill | 1" thru | RPM=1000, f=0.08"/s | ±0.01" length |
|  | 6 | Debur | Debur holes |  |  |  |
|  | 7 | Hand-File | File sharp edges - Rough File |  |  |  |

| Part | No. | Machine or Device | Activity or Tool | Parameters | RPM and feed | Tolerance |
|---|---|---|---|---|---|---|
| Fastener hub | 1 | Scribe and Ruller | Mark length to be cut | 4" | | ±0.2" length |
| | 2 | Vertical/Horizontal Band Saw | Cut the block | 4" | | ±0.2" length |
| | 3 | Mill | Face mill sides of block till flat, 4 flute 0.75"dia face mill | 4" x 2" | RPM=410, f=0.04"/s | ±0.02" length |
| | 4 | Mill | Find edge of block and bore half hole with a fly cutter | 2.5" dia | RPM=50, f=0.26"/s | ±0.02" length |
| | 5 | Mill | Mill out fixture, 4 flute 0.75"dia face mill | refer to drawing | RPM=410, f=0.04"/s | ±0.02" length |
| | 6 | Mill | Drill 2 clearance holes | 0.5" dia | RPM=1000, f=0.08"/s | ±0.008" dia |
| | 7 | Debur | Debur holes | | | |
| | 8 | File | File off sharp edges | Rough File | | |
| Lower crown | 1 | Waterjet | Cut out profile crown, with holes | 4.5" dia, 2.5" dia hole thru, 12 x 0.5" dia hole thru | | ±0.005", +0.01" and -0.0006", ±0.008" |
| | 2 | Deburer | Debur holes | none | | |
| | 3 | File | File off sharp edges - Rough File | none | | |
| Upper crown | 1 | Waterjet | Cut out profiles, with holes | 4.5" dia, 12x0.5" dia hole thru, 2x0.25" dia hole thru, 2x0.3" thru | | ±0.005", ±0.008", +0.02", ±0.02" |
| | 2 | Mill | Drill position of dowel pin with 19/64" drill | 4.5" dia | | ±0.005" |
| | 3 | Mill | Ream hole for dowel pin with 0.312" ream | 5/16" dia | RPM=50, f=0.26"/s | ±0.001 |
| | 4 | Press | Press dowel pins into hole | none | | |
| | 5 | Hand-File | File off sharp edges | Rough File | | |

| Part | No. | Machine or Device | Activity or Tool | Parameters | RPM and feed | Tolerance |
|---|---|---|---|---|---|---|
| Gusset | 1 | Waterjet | Cut out profile | refer to drawing | | ±0.01", ±1.5° |
| | 2 | File | File off sharp edges | none | | |
| Hub bottom | 1 | Lathe | Find Center of pipe with dial gauge | | | ±0.002" |
| | 2 | Lathe | Bore Center of pipe with bore | 2" thru | RPM=100 | 0" and -0.001" |
| | 3 | Debur | Debur sharp edge of Center | none | | |
| | 4 | File | File off sharp edges | | | |
| Hub upper | 1 | Lathe | Find Center of pipe with dial gauge | | | ±0.002" |
| | 2 | Lathe | Bore Center of pipe with boring bar | 2" thru | RPM=100 | 0" and -0.001" |
| | 3 | Debur | Debur sharp edge of Center | none | | |
| | 4 | File | File off sharp edges | Rough File | | |
| Lower hub arm connector | 1 | Scribe and Ruller | Mark length to be cut | 1.5" | | ±0.2" length |
| | 2 | Vertical/Horizontal Band Saw | Cut the block | 1.5" | | ±0.2" length |
| | 3 | Mill | Face mill sides of block till flat, 4 flute 0.75"dia face mill | 1.5" x 2" | RPM=410, f=0.04"/s | ±0.02" length |
| | 4 | Mill | Find edge of block and bore half hole with fly cutter | 2.5" dia | RPM=50, f=0.26"/s | ±0.02" length |
| | 5 | Hand-File | File off sharp edges | Rough File | | |
| Main shaft | 1 | Scribe and Ruller | Mark length to be cut | 17" length | | ±0.01" |
| | 2 | Angle Grinder<br>Vertical Band Saw | Cut the shaft | 17" length | | ±0.01" |
| | 3 | Mill/Drill press | Drill 2 clearance holes | 5/16" dia | | 0" and +0.001" |
| | 4 | Mill/Drill press | Drill 2 tapped holes | 7/32", 0.5" - 20 tap | | |
| | 5 | Debur | Debur holes | | | |
| | 6 | File | File off sharp edges | Rough File | | |

| Part | No. | Machine or Device | Activity or Tool | Parameters | RPM and feed | Tolerance |
|---|---|---|---|---|---|---|
| Shaft base support | 1 | Scribe and Ruler | Mark length to be cut | 10" length | | ±0.2" length |
| | 2 | Vertical/Horizontal Band Saw | Cut the block | 10" length | | ±0.2" length |
| | 3 | Mill | Find edge of block | | | ±0.02" length |
| | 4 | Mill | Drill with 0.5" drill, then 1", then 1.375", then bore interference fit hole with boring bar | 1.5" dia | RPM=100, f=0.002"/s | -0.002" and - 0.003" |
| | 5 | Mill/Drill press | Drill 4 holes ande tap for bolts | 7/32", 0.5" - 20 tap | RPM=1000, f=0.08"/s | ±0.001" |
| | 6 | Mill/Drill press | Flip block on side, drill 2 holes and tap for bolts | 7/32", 0.5" - 20 tap | RPM=1000, f=0.08"/s | ±0.001" |
| | 7 | debur | Debur holes | | | |
| | 8 | Hand-File | File off sharp edges | | | |
| Seat frame | 1 | Waterjet | Cut out required profile | refer to drawing | | |
| | 2 | Scribe and Ruler | Find Center line of frame and mark holes | refer to drawing | | |
| | 3 | drill press | Drill clearance holes with 25/64" drill | 3 x 0.375 thru | RPM=1000, f=0.08"/s | ±0.02 |
| | 4 | drill press | Drill fit holes with 47/64" drill | 0.75" thru | RPM=1000, f=0.08"/s | ±0.02 |
| | 5 | Mill | Ream with 0.7495" reamer | 0.75" thru | RPM=50, f=0.26"/s | ±0.001 |

| Part | No. | Machine or Device | Activity or Tool | Parameters | RPM and feed | Tolerance |
|---|---|---|---|---|---|---|
| Support Truss | 1 | Scribe and Ruller | Mark length to be cut | 6.182" length |  | ±0.2" length |
|  | 2 | Vertical/Horizontal Band Saw | Cut the block | 6.182" length | RPM=150 | ±0.2" length |
|  | 3 | Scribe and Ruller | Mark angle to be cut | 135° |  | ±1.5° |
|  | 4 | Vertical/Horizontal Band Saw | Cut the block | 135° |  | ±1.5° |
|  | 5 | Hand-File | File of sharp edges | Rough File |  |  |

# APPENDIX J
# Bill of Materials

| COMPONENT NAME | DESCRIPTION/ APPLICATION | SUPPLIER | PART NUMBER | MATERIAL | QUANTITY | SIZE | PRICE /UNIT ($) | PRICE ($) |
|---|---|---|---|---|---|---|---|---|
| Main Shaft | Main shaft which supports truss structure | McMaster | 6061K47 | AISI 1566 Steel | 1 | Dia: 1.5 ",18 " length | 31.01 | 31.01 |
| Thrust Bearing 1 | Thrust bearing allows for lower hub to rotate without scraping platform. Also serves as support for the hub. | McMaster | 5909K41 | Steel | 2 | I.D. 1.5 ", O.D. 2.1875 ",Height: 5/64 " | 3.68 | 7.36 |
| Thrust Bearing 1 Washer | Washer used for thrust bearing | McMaster | 5909k54 | Steel | 4 | I.D. 1.5 ",O.D. 2.1875 ",Height 0.032 " | 1.66 | 6.64 |
| Shaft Collar | Prevents vertical downward motion of the upper hub and truss structure | McMaster | 9981K19 | Steel | 1 | I.D. 1.5 ",O.D. 2.5",Length: 1" | 38.00 | 38.00 |
| Washer for Thrust Bearing at Arm Joint | washer for the thrust bearing | McMaster | 5909K63 | Steel | 4 | .126" Thick,1" Diameter | 4.26 | 17.04 |
| Thust Bearing at Arm Joint | Thurst Bearing goes on the connecting arm shaft aiding in the movement of the smaller arm link over the stationary truss structure | McMaster | 5909K36 | Steel | 2 | I.D. 1 " , O.D. 1.5625 " | 2.73 | 5.46 |
| Sleeve Bearing at Arm Joint | Sleeve bearing for connector arm at arm joint | McMaster | 6365K256 | PTFE Nomax Line Fiber Glass | 1 | I.D. 1 ",O.D. 1.25 ",Height: 2 " | 12.69 | 12.69 |
| Threaded Link Shaft | Shaft at the end of the truss structure which provides for rotation of the seat. Threaded end will help compress the shaft to eliminate play | McMaster | 8350T69 | AISI 51200 steel 240 000 psi | 1 | Dia 1 ",Length: 6",5/8 " TPI 11 | 40.92 | 40.92 |
| Fibreglass plate | Plate to support the aid in the mounting of the seat we will be using | McMaster | 8494K513 | Plain Fiberglass (FRP) | 1 | Width: 12 ",Length: 12 ",Thickness: 0.25 " | 28.34 | 28.34 |
| Seat Mounting Bolts | Bolts help secure the seat to the fiberglass plate | McMaster | 92670A632 | 316 Stainless Steel | 1 | Thread size: 0.375 "-16 ,Length: 2 " | 8.27 per 10 | 8.27 |
| Locking Pin | Push Pin inserted into Crown Discs to activate locking mechanism | McMaster | 93750A703 | Precipitation-Hardened Stainless Steel | 1 | Dia 0.5 ",Usable Length 1.5 " | 29.46 | 29.46 |
| Hex Lock Nut | Eliminate play in the link arm by compressing the threaded shaft to the link arm. | McMaster | 97135A270 | Grade 8 Steel | 1 pack of 5 | 5/8 " -11 TPI | 3.34 / pack | 3.34 |
| Socket cap hex screw | Holds base to the platform | McMaster | 91274A456 | Grade 8 Steel | 1 pack of 10 | 1/2 " -13 TPI | 9.76 / pack | 9.76 |
| Hex Nuts | Holds the Cap Screws to the base | McMaster | 90499A033 | Grade 8 steel | 1 pack of 50 | 1/2 " -13 TPI | 7.27 / pack | 7.27 |
| Shoulder Bolts | Holds the fastener structure together | McMaster | 91259A720 | Steel | 2 | 1/2" | 2.40 | 4.80 |
| Shoulder Bolt Hex Nuts | Nuts for fasteners | McMAster | 97135A230 | Steel | 2 | 3/8" - TPI 16 | 3.06 | 3.06 |
| Seat Back Support Foam | Foam on seat back support | McMAster | 45305144 | Polyethelene foam | 1 | 3/4" ID,1/2" thick, 6' length | 2.46 | 2.46 |
| Hub Sleeve Bearings | Bronze Bushing allows for rotary motion of the truss structure about the main shaft | Applied | part number CJ24E32-24 Item Number 2250342 | Rulon Plastic | 2 | I.D. 1.5 ",O.D. 2 ",Length 3 " | 16.80 | 33.60 |
| Square Tubing Bottom | Truss structure made out of square tubing | Alro Metals | 13008424 | Carbon Steel | 1 | Height: 2 ",Width: 2 " ,Wall Thickness: 0.12 ",Length: 24 " | 4.14 | 4.14 |
| Square Tubing Top | Truss structure made out of square tubing | Alro Metals | 13009024 | Carbon Steel | 1 | Height: 2 ",Width: 2 ",Wall Thickness: 0.18 ",Length: 24 " | 5.52 | 5.52 |
| Square Stock Type 2 for Fasteners, Arm Joint, Lower Hub Arm Connector | Connects upper hub to the square stock which makes up the truss. Bolts in this part help align the warped truss structure | Alro Metals | O6301520 | Carbon Steel | 1 | Height: 2 ",Width: 2 " ,Length: 12 " | 25.20 | 25.20 |
| Hub | Hub is welded to the static truss structure which contains sleeve bearings allowing for rotation around the main shaft | Alro Metals | AAA00500 | Carbon Steel | 1 | I.D. 1.5 ",O.D. 2.5 ",Length 12 " | 13.69 | 13.69 |
| Crown Discs | 2 Discs of identical hole patterns allow for locking of the mechanism | Alro Metals | AAA00600 | General-Purpose Low-Carbon Steel | 1 | Plate of 12 "x 12 " Thickness 3/8 " | 30.81 | 30.81 |
| Support Block | Block is used to retain the main shaft which is pressed into the block and is the most important joint in the mechanism | Alro Metals | AAA00300 | Carbon Steel | 1 | Length : 12 ",Width: 3 ",Thickness: 3 " | 34.49 | 34.49 |
| Locking Pin | Push Pin inserted into Crown Discs to activate locking mechanism | McMaster | 93750A715 | Precipitation-Hardened Stainless Steel | 1 | Dia 0.5 ",Usable Length 3" | 34.64 | 34.64 |
| Locking Pin - Seat Cushion | locking pins to lock seat cushion onto seat frame | McMaster | 94975A123 | Stainless Steel | 2 | 3/16" diameter,Usable length 2" | 4.08 | 8.16 |
| Seat Cushion | Vinyl-covered seat cushion with back support | Meijer | 70882105450 | Foam, Vinyl cover | 1 | 14" X 15" Boat Seat | 31.79 | 31.79 |
| Miscellaneous | Saw Cutter, Angle Grinder | Alro Metals | AAA00600 29900010 | Carbon Steel | - | - | 11.95 | 11.95 |
| Miscellaneous | Cut- Off Blades | Home Depot | 076607052506, 076607016171 | - | - | - | 6.18 | 6.18 |
| Seat frame plate | Seat frame for mounting seat cushion | Alro Metals Plus | - | Steel | 1 | Width: 10 ",Length: 14 ",Thickness 1/2" | 88.13 | 88.13 |
| Spray Paint | Spray paint cansisters used for painting the seat | Home Depot | 076607759030, 020066758288, 020066751586 | - | - | - | 27.08 | 27.08 |
| Tape | Tape used to protect bearings during sanding/ angle grinding | Meijer | 5111503683 | Blue Tape | 1 | - | 7.07 | 7.07 |
| Seat Cushion Locking Struts | Struts welded to seat frame to lock seat cushion | ME 450 Machine Shop | - | - | 4 | Height: 1/2 ",Width: 1/2 " ,Length: 2 " | - | - |
| Spacer for seat/threaded link shaft | Spacer for achiving tight fix on hex lock nut | McMaster | 94045K315 | Polyurethane | 1 pack of 3 | I.D. 0.656 ",O.D. 1.375 ",Thickness 1/2" | 12.23 / pack | 12.23 |
|  |  |  |  |  |  |  | Shipping Charges | 17 |
|  |  |  |  |  |  |  | **TOTAL** | **647.56** |

# APPENDIX K

## Assembly Plan

Main Shaft Sub-Assembly

1. Flip the platform over so the longer side is flat on the floor.
2. Insert the main shaft of the base support block into a pre-drilled1.5 in. hole at the bottom face of the platform.
3. Insert the four 0.5 in. diameter steel bolts (McMaster Part# 91274A456) with washers on the top face and lock with corresponding nuts (McMaster Part# 90499A033) on to pre-drilled 0.5 in. diameter holes.
4. Tighten the bolts by hand in a diagonal pattern to ensure force is distributed evenly.
5. Insert two 0.5 in. diameter steel bolts (McMaster Part# 91274A456) with washers on the long side with pre-drilled 0.5 in. diameter holes.
6. Tighten all bolts to 120 ft-lb.

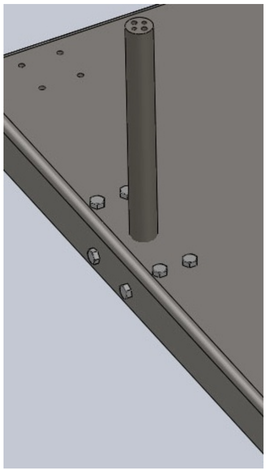

*Figure K.1: Main Shaft Sub-Assembly*

Truss Structure Sub-Assembly

1. Slide one thrust bearing (McMaster Part# 5909K41) to the bottom of the main shaft. The thrust bearing is sandwiched between two thrust washers (McMaster Part# 5909K54).
2. Slide truss structure down the main shaft.

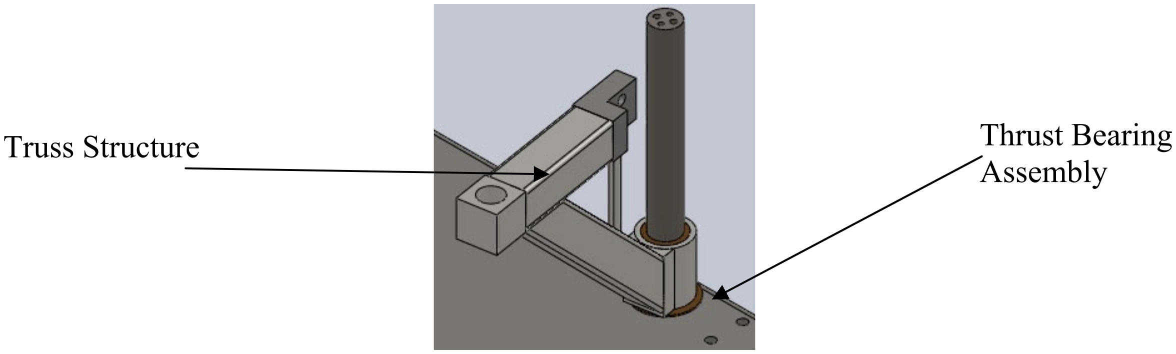

*Figure K.2: Shows the thrust bearing assembly and the truss structure*

3. Slide a shaft collar (McMaster Part# 9981K19) down the main shaft, and stack a thrust bearing sandwiched between two washers on top of the shaft collar. Leave the collar loose.
4. Slide upper hub down main shaft. Align holes for the disconnect coupling and insert two 0.5 in. diameter steel shoulder bolts (McMaster Part# 91259A720). Lock with corresponding lock nuts (McMaster Part# 97135A230). Tighten shoulder bolts to 47 ft-lb.
5. Lift up the shaft collar with thrust bearing till the top washer presses firmly on to the bottom of upper hub. Tighten the shaft collar to 20 ft-lb.

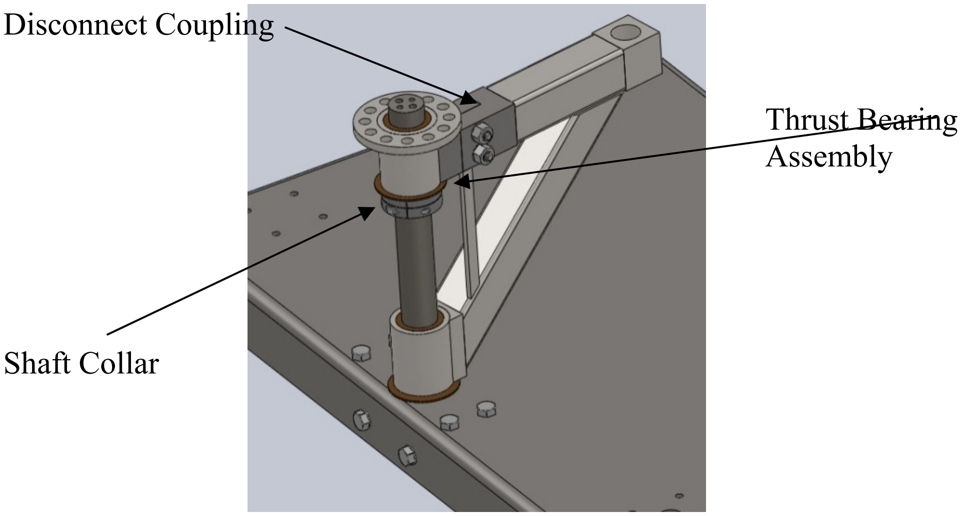

*Figure K.3: Truss Structure Sub-Assembly*

Seat Frame Sub-Assembly

1. Insert the top crown on to the top of the main shaft, using the two dowel pins as guide. Knock the crown with a mallet to ensure the crown sits flush with the top of the shaft. Insert two 0.25 in. diameter steel bolt and tighten to 12.5 ft-lb.
2. Slide a thrust bearing (McMaster Part# 5909K36) sandwiched between two washers (McMaster Part# 5909K63) down the shaft of the seat frame.
3. Insert the seat frame shaft into the connection block.
4. Slide a thrust bearing (McMaster Part# 5909K36) sandwiched between two washers (McMaster Part# 5909K63) up the shaft of the seat frame. Slide a specially fabricated washer up the shaft until it sits flush with the thrust bearing washer. Insert a 0.625 in. diameter lock nut (McMaster Part# 97135A270) up threaded part of shaft, and tighten to 150 ft-lb.

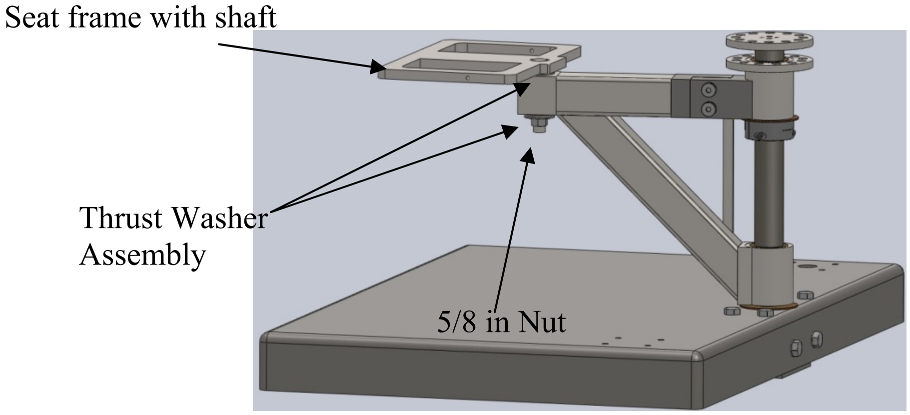

*Figure K.4: Seat Frame Sub-Assembly*

Seat Sub-Assembly

1. Place seat onto seat frame, using blocks as guides.
2. Insert two locking pins (McMaster Part# 94975A123) into holes located at the side of the frame.

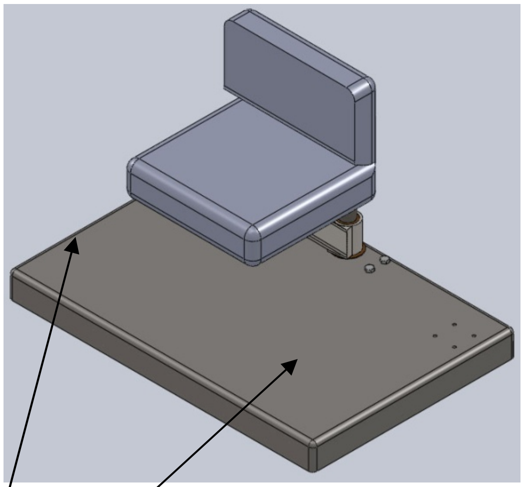

*Figure K.5: Seat Sub-Assembly*

# APPENDIX L
## Welding Plans

| Part | No. | Machine or Device | Activity or Tool | Parameters |
|---|---|---|---|---|
| Truss Structure | 1 | Vice and C-Clamp | Clamp the Vice to the welding table put the part into the Vice | 4" jaw opening C-Clamp |
| | 2 | 4.5" Angle Grinder | Grind the scaling off the metal and chamfer the welding path | |
| | 3 | C-Clamp | Mount "Swingbar 2" onto the Shaft that is pressed onto "Base Block" then clamp "Upper Hub" to "Swing Bar 1" | 3" |
| | 4 | Miller Delta Weld 450 and Miller D-52 Wirefeeder | Tack weld the part | 320 ipm and 19 volts |
| | 5 | Miller Delta Weld 450 and Miller D-52 Wirefeeder | Create 1" long stitch welds around the perimiter | Wat 15 minutes to allow the part to cool down |

| Part | No. | Machine or Device | Activity or Tool | Parameters |
|---|---|---|---|---|
| Upper Hub | 1 | Vice and C-Clamp | Clamp the vice to the welding table put the part into the vice | 4" jaw opening C-Clamp |
|  | 2 | 4.5" Angle Grinder | Grind the scaling off the metal and chamfer the welding path |  |
|  | 3 | C-Clamp | Clamp the parts (hub and fastener - hub) to each other | 5" |
|  | 4 | Oxygen Acetelyne Torch | Turn on the torch and preheat the "hub" and "fastener - hub" parts | Rosebud Tip |
|  | 5 | Miller DialArc 250 TIG process | Tack weld the part | 120 Amp with a 3/8 Thoriated tip, use mild steel for filler |
|  | 6 | Miller DialArc 250 TIG process | Create 1" long stitch welds | Wait 30 minutes to allow the part to cool down |
|  | 7 | 3-ton Press | Press on the upper crown onto upper hub |  |
|  | 8 | Miller Delta Weld 450 and Miller D-52 Wirefeeder | Tack weld the part | 320 ipm and 19 volts |
|  | 9 | Miller Delta Weld 450 and Miller D-52 Wirefeeder | Create 1" long stitch welds around the perimiter | Wait 15 minutes to allow the part to cool down |
|  | 10 | 3-Ton Press | Press in the plastic sleeve bearing |  |

| Part | No. | Machine or Device | Activity or Tool | Parameters |
|---|---|---|---|---|
| Swing Bar 2 | 1 | Vice and C-Clamp | Clamp the vice to the welding table put the part into the vice | 4" jaw opening C-Clamp |
| | 2 | 4.5" Angle Grinder | Grind the scaling off the metal and chamfer the welding path | |
| | 3 | C-Clamp | Clamp the parts ("lower hub" and "lowerhub fillet") to each other | 5" |
| | 4 | Oxygen Acetelyne Torch | Turn on the torch and preheat the "hub" and "fastener - hub" parts | Rosebud Tip |
| | 5 | Miller DialArc 250 TIG process | Tack weld the part | 120 Amp with a 3/8 Thoriated tip, use mild steel for filler |
| | 6 | Miller DialArc 250 TIG process | Create 1" long stitch welds | Wait 30 minutes to allow the part to cool down |
| | 7 | C-Clamp/90 Degree Stand | Clamp the "Swingbar 2" to the 90 degree stand and to the "lowerhub fillet" | 5" |
| | 8 | Miller Delta Weld 450 and Miller D-52 Wirefeeder | Tack weld the part | 320 ipm and 19 volts |
| | 9 | Miller Delta Weld 450 and Miller D-52 Wirefeeder | Create 1" long stitch welds around the perimiter | Wait 15 minutes to allow the part to cool down |
| | 10 | 3-Ton Press | Press in the plastic sleeve bearing | |

| Part | No. | Machine or Device | Activity or Tool | Parameters |
|---|---|---|---|---|
| Swing Bar 1 | 1 | Vice and C-Clamp | Clamp the vice to the welding table & put the part into the vice | 8" jaw opening C-Clamp |
| | 2 | 4.5" Angle Grinder | Grind the scaling off the metal and chamfer the welding path | |
| | 3 | C-Clamp | Clamp the parts to the welding table | 8" |
| | 4 | Oxygen Acetelyne Torch | Turn on the torch and preheat the "arm joint" and "fastener" parts | Rosebud Tip |
| | 5 | Miller Delta Weld 450 and Miller D-52 Wirefeeder | Tack weld the part | 320 ipm and 19 volts |
| | 6 | Miller Delta Weld 450 and Miller D-52 Wirefeeder | Create 1" long stitch welds | Wait 15 minutes to allow the part to cool down |
| | 7 | 3-Ton Press | Press in the plastic sleeve bearing | |

# APPENDIX M

## Engineering Changes

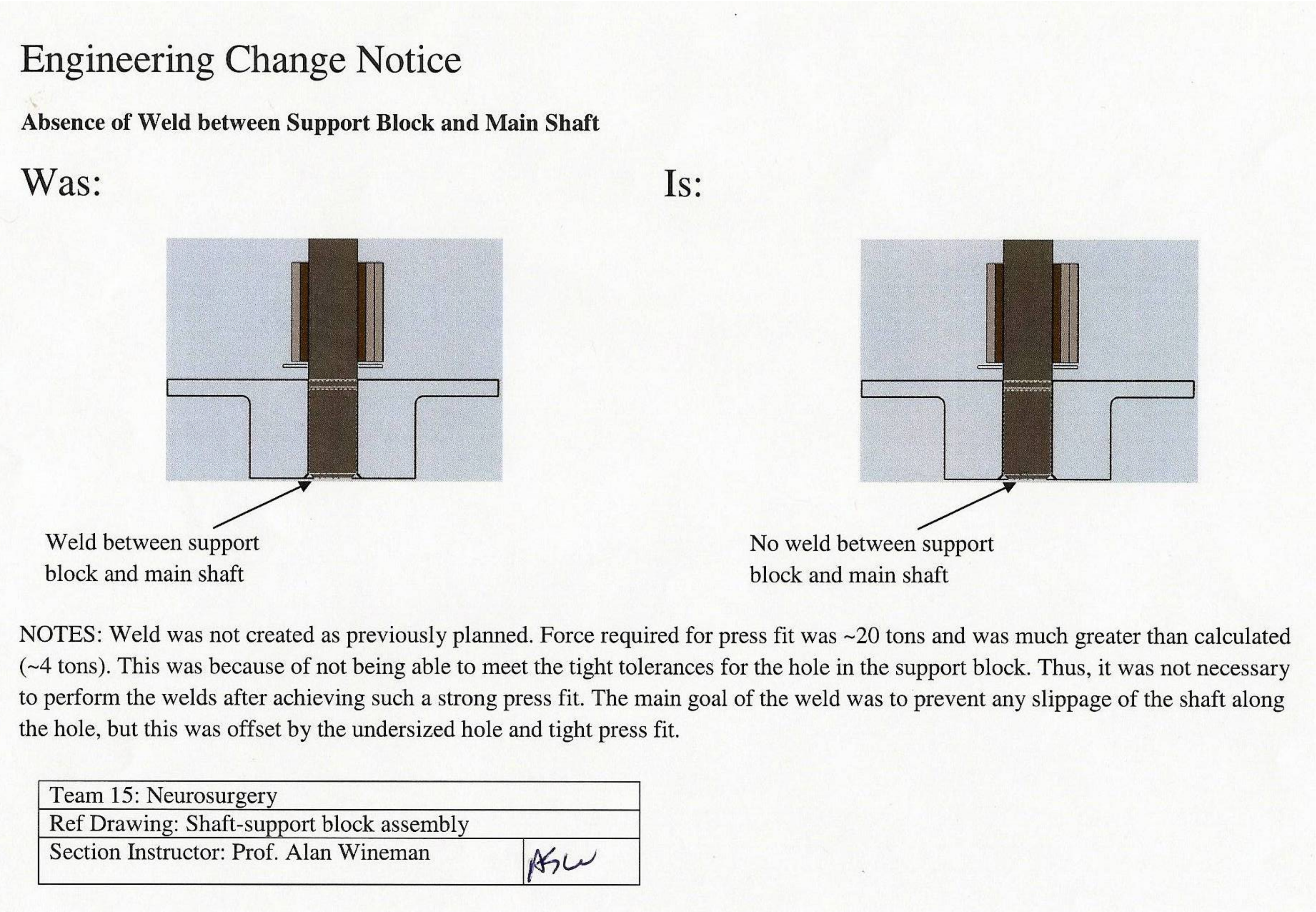

# Engineering Change Notice

**Absence of Weld between Support Block and Main Shaft**

Was:

Weld between support block and main shaft

Is:

No weld between support block and main shaft

NOTES: Weld was not created as previously planned. Force required for press fit was ~20 tons and was much greater than calculated (~4 tons). This was because of not being able to meet the tight tolerances for the hole in the support block. Thus, it was not necessary to perform the welds after achieving such a strong press fit. The main goal of the weld was to prevent any slippage of the shaft along the hole, but this was offset by the undersized hole and tight press fit.

Team 15: Neurosurgery
Ref Drawing: Shaft-support block assembly
Section Instructor: Prof. Alan Wineman

# Engineering Change Notice:

**Absence of Horizontal Bolt Holes in Support Block**

## Was:

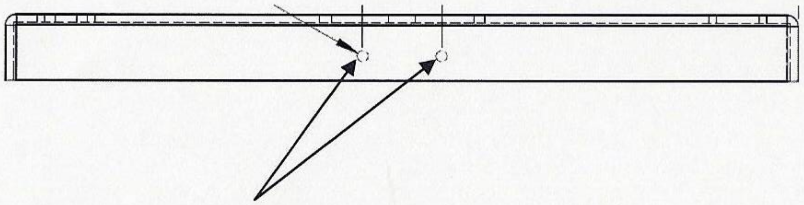

Two horizontal bolt holes
on side of lift platform
(side view)

## Is:

Horizontal bolt holes were not
machined onto lift platform

NOTES: The two horizontal bolt holes were not machined onto the lift platform as previously planned. There was difficulty in mounting the lift platform (2'X 3'X 2.5") onto a mill for accurate machining of the bolt holes. The alternative choice was to mount a magnetic-lock mini-drill press onto the lip on the platform to drill the holes. However, this process would have limited accuracy and in addition, the vertical range of the mini-drill press did not allow for drilling it into the lip of the base platform. Moreover the base support block of the lift was not sitting flush with the platform side , with an infinitesimal gap between the block and the lift platform side flange. We also did not want to run the bolts through and cause permanent deformation of this flange..

| | |
|---|---|
| Team 15: Neurosurgery | |
| Ref Drawing: Lift Platform | |
| Section Instructor: Prof. Alan Wineman | AGW |

# Engineering Change Notice

**Seat Cushion Mounting Design**

Was:

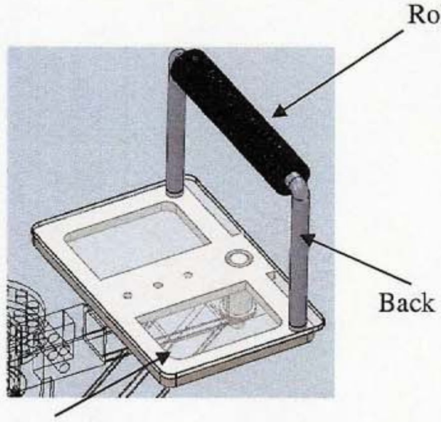

Is:

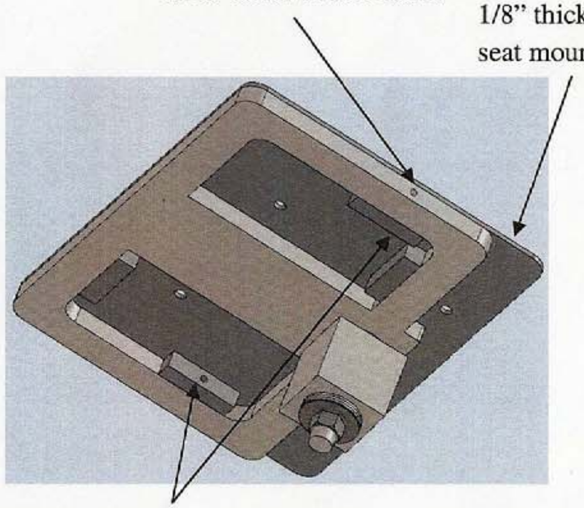

NOTES: A new seat mount design was developed based on the shape of the seat frame and the location of the mounting holes in the seat cushion purchased. This design involved making 3/16" diameter holes on the side of the seat frame (Appendix H) and welding four aluminum mounting blocks (0.5"×0.5"×2"), with corresponding 3/16" diameter holes, onto a 1/8" thick aluminum plate. The locations of the mounting blocks are roughly as shown in the diagram above. The structure was assembled first then mounting blocks were tack welded before the actual welding to improve accuracy. . This mounting plate was screwed onto the seat cushion and then 3/16" undersized locking pins were used to lock the mounting plate to the seat frame.

| | |
|---|---|
| Team 15: Neurosurgery | |
| Ref Drawing: Seat mount assembly | |
| Section Instructor: Prof. Alan Wineman | |

# Engineering Change Notice

**Spacer in Seat Shaft**

Was:

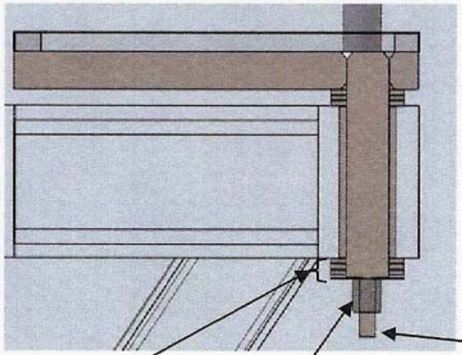

Is:

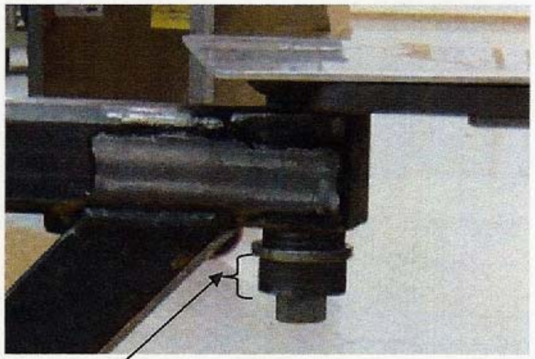

NOTES: We cut the case hardened shaft by approximately ½" in order to do away with any extraneous lengths. However, it was not possible to achieve the exact length required when cutting the shaft using the angle grinder. This resulted in the shaft being longer than expected. We decided not to attempt to cut the shaft to exact length as it would be an arduous and highly imprecise process. Instead, we decided to use spacers to achieve a tight fit on the hex nut. We obtained a scrap piece of cylindrical aluminum of thickness ~ 3/4", outer diameter ~ 1.5" and inner diameter of 5/8 " to fit the thread. It was then machined on the lathe using a 1" drill bit to a depth of ~1/8". The dimensions are only approximate as we had to work with unconventional dimensions to achieve a tight fit on the hex nut.

| | |
|---|---|
| Team 15: Neurosurgery | |
| Ref Drawing: Seat shaft-truss structure assembly | |
| Section Instructor: Prof. Alan Wineman | |

# Engineering Change Notice

**Supporting Plate for Seat Joint Weld**

Was:

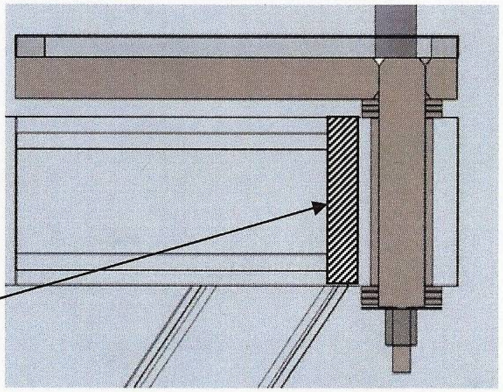

Original weld bead
Location
(Shaded area)

Is:

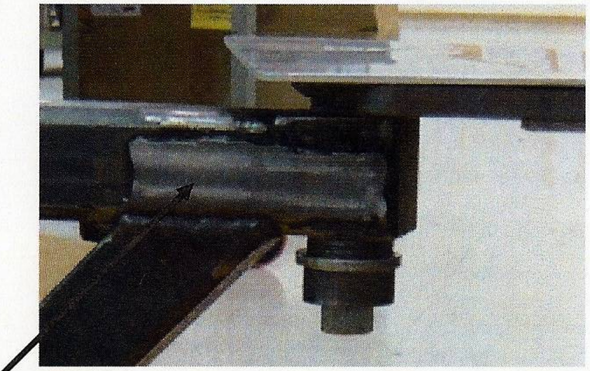

1/8 " steel plate used to reinforce weld between the arm joint block and truss structure (used on both sides of upper swing arm

NOTES: We introduced a steel plate (1/8" thick) to act as reinforcement for the weld between the arm joint block and the upper swing arm in the truss structure. This was done purely as a practical modification to provide further rigidity to the weld. This was performed on the opposite side of the truss structure as well. We maintained the original welding plans and created the original weld bead. The steel plate was merely welded on this existing weld.

| | |
|---|---|
| Team 15: Neurosurgery | |
| Ref Drawing: Seat shaft-truss structure assembly | |
| Section Instructor: Prof. Alan Wineman | |

## APPENDIX N

## Validation procedure

In the following section, a detailed testing and validation method explains how the engineering specifications were tested.

Weight of mechanism

1. Prepare all the parts and components for seat required for assembly.
2. Use a weighing scale to weigh all the components, either one at a time or in batches, as allowable.
3. Sum the individual weights to obtain the overall weight of the entire mechanism.
4. The bearings, nuts, bolts, pins, seat cushion should all be accounted for in the mechanism weight.

Time to Deployment:

1. Ensure seat is in stowed position (locking pin fixed, seat cushion removed, turned to side)
2. Record time taken to deploy seat; remove locking pin, swivel seat frame, attach seat cushion, lock seat cushion in place and reinsert locking pin.
3. The seat should be in the fully extended position in the end.
4. Repeat this process over 5 trials and take average.

Steps to Deployment:

1. Ensure seat is in stowed position (locking pin fixed, seat cushion removed, turned to side).
2. Record number of steps required to deploy the seat such that it is in the final fully extended position with the seat cushion attached.
3. Locking/ unlocking of pin are counted as a step each.
4. Attaching seat cushion and swiveling the truss are counted as a step each.

Play in Joints

1. Play in joints is validated by measuring the overall deflection (degrees) of the seat upon the addition of a weight.
2. Ensure seat is in fully extended position, with seat cushion attached and locking pins in place.
3. Fix a dial gauge at the edge of the seat frame. The dial gauge should read zero deflection when there is no load on the seat cushion.
4. Load the seat in 10 lb. mass increments using a set of standard masses, up to 250 lbs.
5. Record the deflection recorded by the dial gauge after each 10 lb. increment.

6. Repeat test.

## Comfort Rating of Cushion

1. Ensure seat is in fully extended position, with seat cushion attached and locking pins in place.
2. Set up the previous seat and lift that Dr. Muraszko currently uses.
3. Get 5 different individuals to sit on both the previous seat and our current design and rate the relative comfort of the seat cushions on a scale of 1-10.
4. Calculate the mean ratings for the seat cushions for the previous lift and the new design.
5. This would allow us to determine the improvements in comfort for the new seat cushion.

## Horizontal Travel Distance

1. Ensure seat is in fully extended position, with seat cushion attached and locking pins in place.
2. Using a measuring tape, measure the distance from the center of the main shaft to the edge of the seat.
3. The maximum possible travel distance would be the width of the lift platform, 2 ft.
4. Determine the percentage of the maximum horizontal travel distance achieved.

## Maximum Weight Supported

1. Ensure seat is in fully extended position, with seat cushion attached and locking pins in place
2. Place weights on the seat frame in 10 lb. increments up to 250 lb.
3. Observe for noticeable deflections in the main shaft and truss structure with dial gauges.

## % of Stowaway Area on Platform

1. Using a measuring tape, measure the dimensions of the lift platform.
2. Calculate the lift platform area.
3. Ensure seat is in the stowed position and seat cushion removed.
4. Using a measuring tape, measure the dimensions of the overall projected area of the outline of seat on the lift platform.
5. Calculate the approximate footprint of the seat on the lift platform.
6. Calculate the percent area covered by the seat when in the stowed position.

## Gaps in Welds

1. Using a magnifying glass, all the welds are checked for gaps in welds.
2. The gaps are then highlighted to be fixed.

## Reach of Seat as a %

1. Use the previously determined value for the lift platform area and the horizontal travel distance of the seat.
2. The reach area of the seat would be the circular sector spanned by the seat.
3. To determine the angle of the circular sector, prepare the seat with the seat cushion attached.
4. Swivel the seat to determine the extent of revolution possible without any obstructions to the user.
5. Using this value, in degrees, to determine the area of the circular sector.
6. Express the reach of the seat as a percentage of the platform area of the lift.

## APPENDIX O

### Material Selection Assignment (Functional Performance)

In this section, we conducted a functional performance analysis on materials used in our prototype. The two major components of our prototype were the main shaft, where the primary arm swivels on, and the primary arm, which is a truss structure to minimize deflection and bending.

The function of the main shaft is to act as both a pivot and a load carrying structure for the seat mechanism. The main shaft is modeled as a vertical cylinder rigidly connected to the base support block. The primary arm, also a truss structure, is a load carrying structure because the user will sit on the arm. The truss structure is modeled as a truss, with each individual length of steel assumed to be a beam.

Because this seat will be used by a neurosurgeon, it is vital we choose the best material to be used. The main objective on conducting functional performance analysis on the material is to ensure there will be minimum deflection and maximum strength. In addition, we have to evaluate to ensure the material will deform before fracturing, as Dr Muraszko is involved in critical neurosurgery. The seat deforming will give the doctor ample warning to not use the seat before a surgery, and not fracture suddenly in the middle of surgery to protect the patient.

Before setting constraints for the material, we had to determine the material index we were going to use. From the book "Materials Selection in Mechanical Design" by Michael Ashby, we used the following material index:

$$M = \frac{E^{\frac{1}{2}}}{\rho}$$

Where E is the Young's Modulus and ρ is the density of the material, and the length and stiffness has been specified. The constraints our team took into account while evaluating the analysis was to limit the price of the material to below 2 USD/lb, ensure the yield strength is higher than 60 ksi, has a low density (less than 0.3 lb/in$^3$) to minimize weight and has a Young's Modulus of greater than 29 x 10$^6$ psi. Based on these constraints, we input the data into Cambridge Engineering Selector 2009, a program that analyses material, and came up with the materials listed in Figure O.1

Based off the materials displayed in Figure O.1, we chose to use carbon steel AISI 1060, due to the low price (around 0.28 USD/lb) and relatively high Young's Modulus (30 to 31 x 10$^6$ psi). In addition, AISI 1060 has a high yield strengths (54 to 67 ksi), giving us a safety factor of 5.5 when the seat is loaded to its full capacity. Also, high yield strength will ensure the beam will elastically deform and return to its original state after use. On top of that, a low material density of 0.3 lb/in$^3$ helps minimize the weight of the seat mechanism. We tried to use our preferred choice of AISI 1060 carbon steel for all the components in our design. However, in view of the fact that the final product would be solely a mock-up prototype for concept demonstration, we went with the cheapest alternative material whenever possible. We did ensure that we used steel types in the 1000 series as they all have similar mechanical properties.

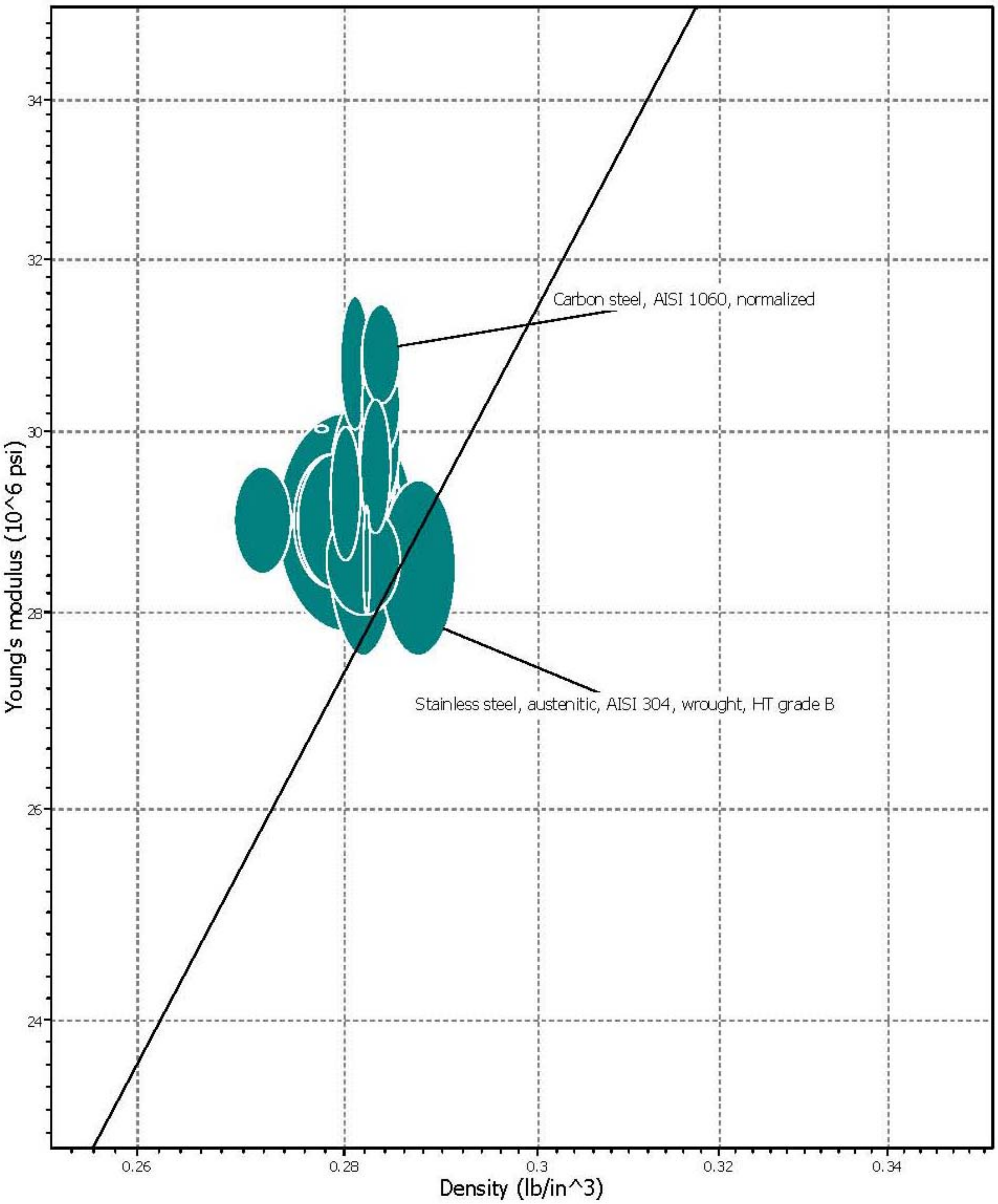

Figure O.1: CES Analysis for Functional Performance of Materials

## Material Selection Assignment (Environmental Preference)

Before the material is finalized, we have to consider the environmental impact of the chosen steel type. Some steels may be cheap and have high strength, but will severely damage the environment. This environmental performance is to make certain the steel we chose causes minimal pollutants and is environmentally friendly. For comparison, we chose to compare carbon steel against stainless steel. This would mimic a comparison between our mock-up prototype and the eventual seat assembly manufactured by *Protomatic* using stainless steel. To evaluate the environmental impact of each metal, we used SimaPro to conduct the analysis. In SimaPro, we used Eco-Indicator 99 (1) V2.02 to access the environmental damage or impact.

In SimaPro, the material closest to carbon steel is 9SMnPb (1.0718) and the material closest to stainless steel was X5CrNi18 (304). Because the prototype of our seat weighed in at 55 lb., the analysis will be conducted for only 55 lb., ignoring waste and extra material taken out during machining. There were 4 important aspects that we analyzed, namely amount of pollutants produced, characterization, normalization and single score indicator. After analysis, we came to the conclusion that regular carbon steel is the more environmental friendly of the two. Referring to Figure O.2, it can be seen that producing stainless steel produces 30% more pollutant gases compared to producing carbon steel of a similar weight. Some of the gases produced are toxic and will cause severe damage to the environment; therefore we want to use a material with less pollution.

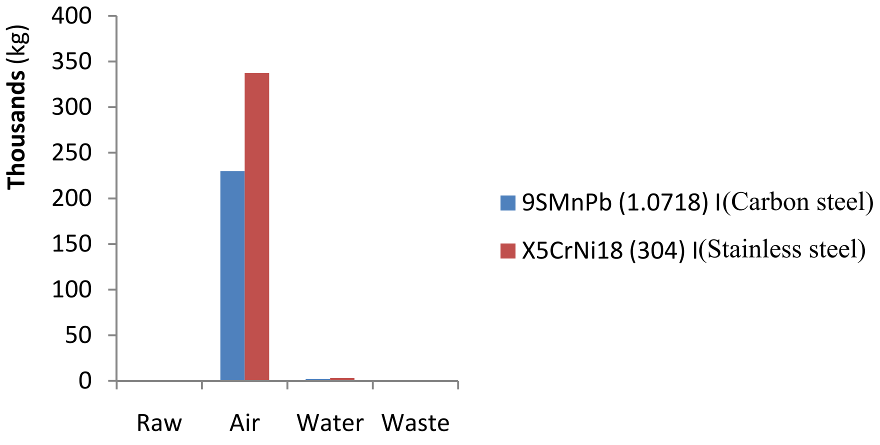

*Figure O.2: Pollutants from Producing 55lbs of Metal*

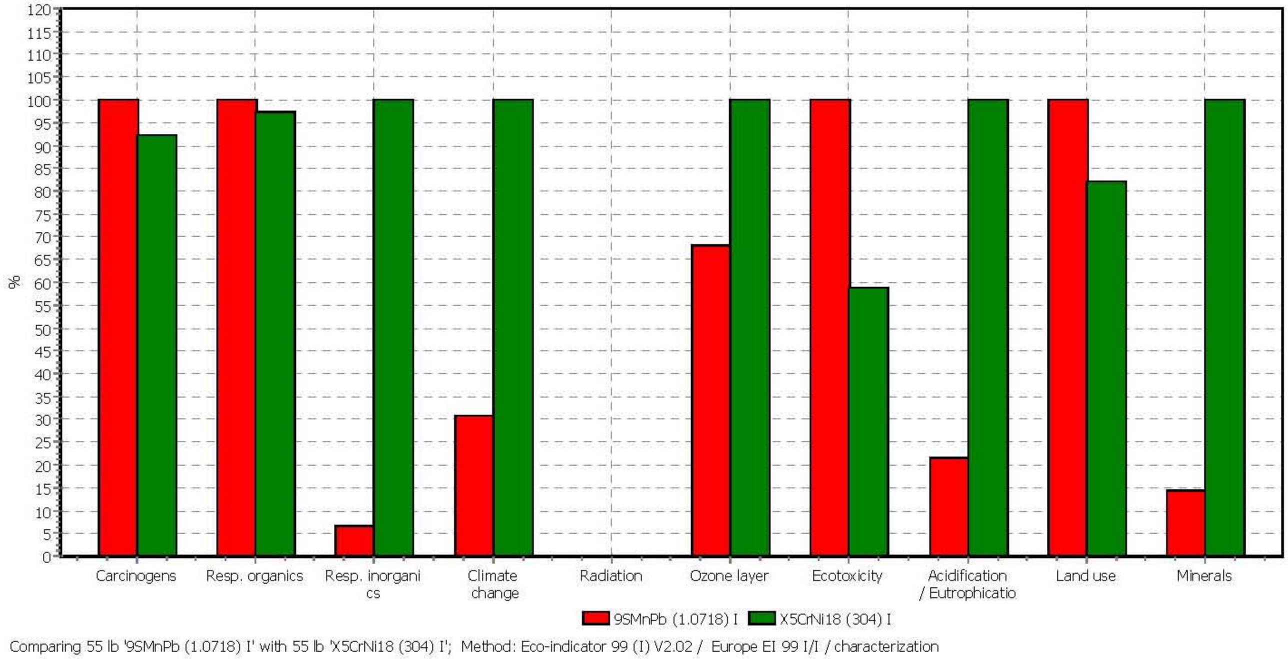

*Figure O.3: Characterization Indicator*

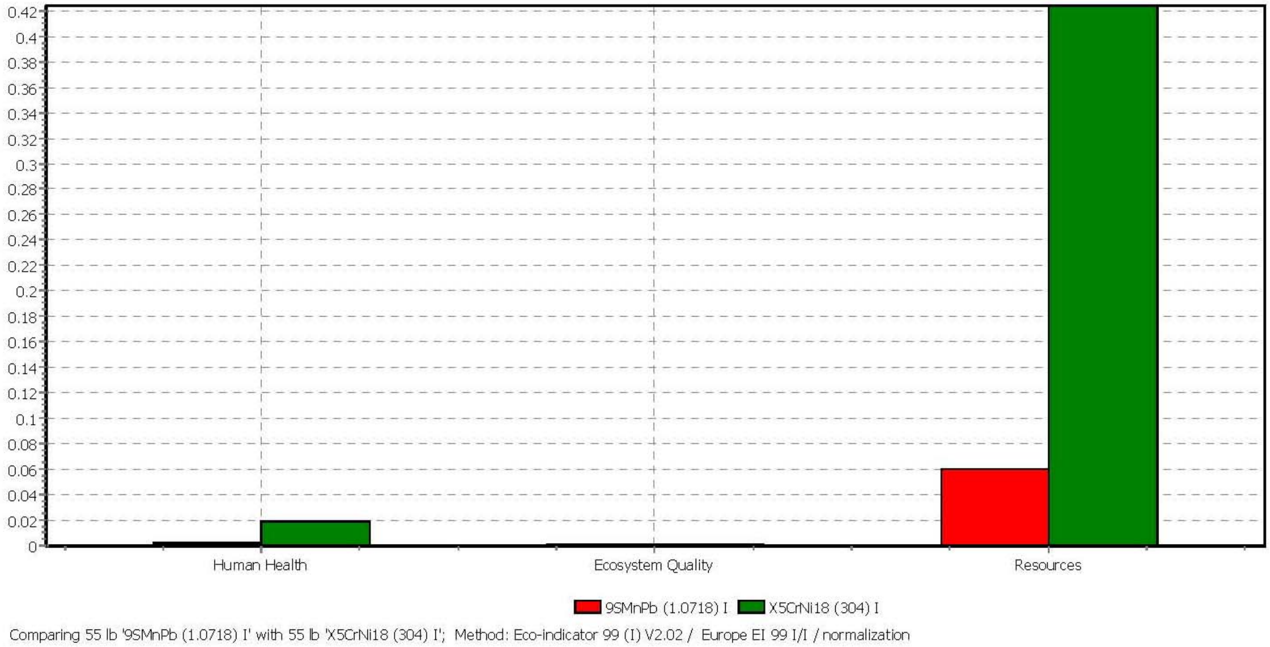

*Figure O.4: Normalization Indicator*

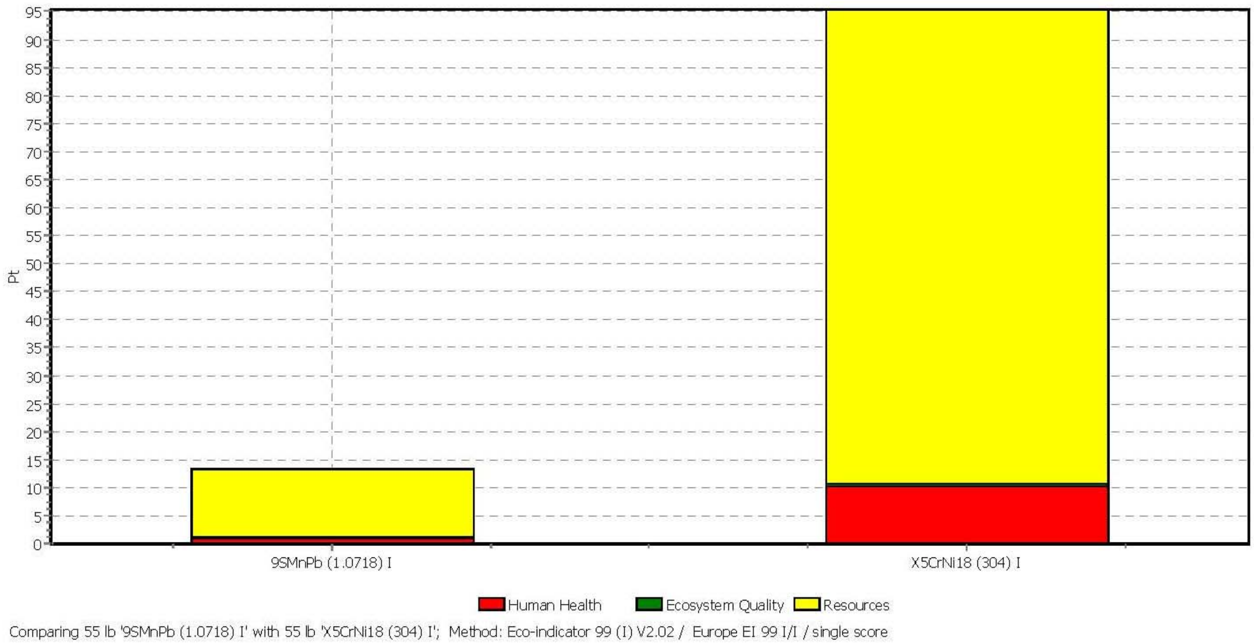

Comparing 55 lb '9SMnPb (1.0718) I' with 55 lb 'X5CrNi18 (304) I'; Method: Eco-indicator 99 (I) V2.02 / Europe EI 99 I/I / single score

*Figure O.5: Single Score Indicator*

In addition, we also evaluated the point indicator shown in SimaPro. From Figure O.5, we can see that once normalized, stainless steel consumes more resources than regular carbon steel for a 55 lb. final product. Also, stainless has a high negative impact on human health. Referring to Figure O.5, the single score indicator summaries that stainless steel (9SMnPb (1.0718)) has an overall high negative impact on society and environment; therefore it would be more advisable to use carbon steel as it is more environmental and health friendly.

This is in line with the scope of our project as we hope to create the mock up model using the environmentally less damaging plain carbon steel instead of stainless steel. Numerous iterations of the seat design may be required to achieve the most optimized product, hence it makes more practical sense to use a more environmentally friendly material in our manufacturing. This is much more efficient than making every new installment of the seat out of stainless steel.

### Manufacturing Process Selection Assignment

The final prototype we created is a “one-off” equipment solely designed for Dr Muraszko, because the height of the seat and length of the seat is specifically tailored to her request and needs. However, we predict this prototype will interest other small statured neurosurgeons, who may are already looking for a product that functions like our prototype. Therefore, we have to take into consideration if this product were to be mass produced for other neurosurgeons.

In a real world setting, assuming this lift and seat design were to be used for small statured neurosurgeons, we could expect almost 100 of these lifts to be produced. Dr Muraszko’s surgery lift has been gaining quite a reputation within the University of Michigan Hospital, and other doctors have expressed interest.

Based on our estimation of 100 of these lifts produced, we did a qualitative analysis to see if there would be significant difference if we used steel or stainless steel to manufacture the final product.  The main components we considered in this analysis were the main shaft and the truss structure, as these subassemblies weigh about 80% of the entire mechanism. From CES, we found that the material properties of steel and stainless steel are almost similar. The most significant difference between both materials was the price of the materials, because stainless steel cost almost 5 times more than regular carbon steel per pound.

In this analysis, we assume our product will be manufactured at our manufacturer, *Protomatic.* We also assumed that the company manufacturing the seat would have professional machinist and welders manufacturing the lift and seat. Based on our manufacturing knowledge, the best way to manufacture the lift in mass production volume would be to place the components to be manufactured into CNC machines, as well as using a waterjet or plasma cutter to cut all the components.  Because both steels have similar properties, there would be no significant difference in preparation for these processes. In the manufacturing process, there is some difference in the welding process for both steel and stainless steel. Stainless steel welding uses a different welding rod, and requires more expertise.

However, when the final product is done, carbon steel will require significant coatings of paint and protective elements to ensure the seat does not rust, unlike stainless steel. Stainless steel may require some special one-time coating, while carbon steel would need to be regularly checked for paint peeling off. But, the cheap price of regular carbon steel will offset the price of coating on carbon steel, making steel a more attractive option. In addition, the seat will be draped with sterile cloth; therefore it would not comprise the hygiene and cleanliness of the operating room. In conclusion, carbon steel is the best material among the 2 steels being evaluated. Both materials have relatively similar mechanical properties, but carbon steel is significantly cheaper than stainless steel. Despite these lucid benefits, our product might eventually still have to be made out of stainless steel in order to meet strict hospital safety requirements.

### Design For Assembly (DFA)

Design for assembly is the art of designing a product for ease of assembly and part handling. The concept behind DFA is to reduce the time and complexity in putting together sub assemblies of the system.

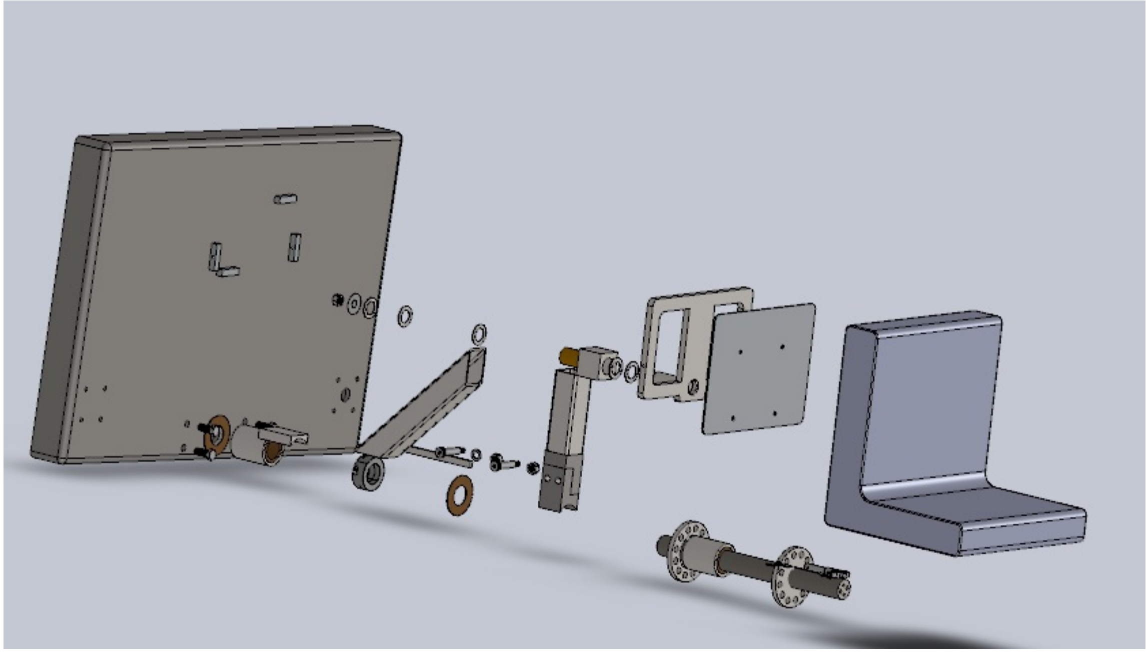

*Figure O.6: Exploded View of Assembly*

In our seat design we applied concepts of DFA to certain parts, however due to resource and time constraints we were unable to apply all concepts regarding DFA:

Minimize Part Count:

We were unable to apply DFA methods in minimizing part count due to the nature of our design. However, we have identified some areas where we feel that DFA can be applied in the final product.

- Hub and Adapters:

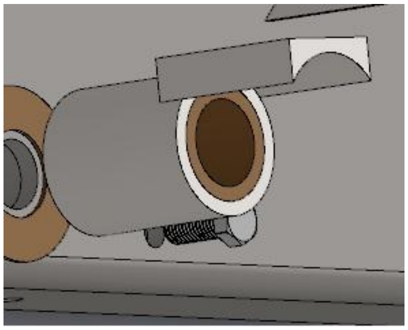

*Figure O.7: Hub and Shaft Assembly could be made one part*

We could have combined the hub and adapter and machined it out of a single block of steel provided we had the necessary resources (CNC Mill and budget allocations). This is applicable for both the upper and lower hubs.

- Fastener:

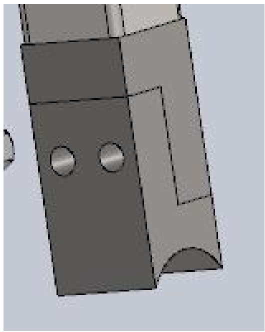

*Figure O.8 : Fastener could have been made one part*

After we manufactured and assembled the seat we realized that the design for the disconnect coupling could have been avoided by using a single square tube in lieu of the fasteners. This would have helped reduce the number of parts in the assembly and removed another mode of possible failure.

Modularize Parts into a Single Structure

We were able to apply this concept of DFA into our design and assembly.

- Truss Structure:
  The truss structure is welded together to form one single structure. This eases the assembling and disassembling of the seat when not in use. We have used concepts of DFA here to modularize 5 parts into one during assembly.

- Main shaft and Support Block
  The main shaft is pressed into the support block to create one part. This eases the assembling and disassembling of the seat when not in use. Here again DFA helps in the overall assembly of the mechanism.

## BIOGRAPHIES

### Dmytro Dmytrenko

I grew up in Kiev Ukraine, and I distinctly remember times when my father would bring me along to an industrial factory where I got the chance to use some of the machinery to create my own designs. One of the projects was carving a car out of wood. As my childhood came to a close, my family and I moved to United States, where I became interested in cars. My first big project with a car involved a clutch replacement. During this job I fractured a throwout-bearing fork mount and to fix the problem I molded a new fiberglass mount to the aluminum housing. It turned out to be a brilliant design which lasted well over 100,000 miles. The progression of my interests in engineering has led me to a hobby which involves all aspects of production including design, mathematics, fabrication and testing. My latest project was a motor mount that took me over two years to develop.

In the Summer of 2009 I got my first chance to work as an engineer for Sikorsky Aircraft. I worked in the transmissions department and was tasked to design and perform structural analysis on a bolted connection with dissimilar metals. In the Fall semester of 2009 I got accepted into the Sequential Graduate and Undergraduate Studies program to pursue a Graduate degree in Mechanical Engineering.

I hope to find an internship in the Summer of 2010 in the Aerospace field, my goal is someday to have a full time engineering position with National Aeronautics and Space Agency.

**Lokesh Janarthanam**

I am originally from Chennai, India but I have been living in Singapore for over 15 years. I had long been fascinated by how engines power numerous devices in our society. As a child, I imagined engines to be highly intricate objects whose operations would forever be beyond. This served to fuel my interest in Mechanical Engineering. After my graduation in May 2010, I intend to continue my schooling and do my Master's Degree in Mechanical Engineering, with a focus in thermo science. Meanwhile, I am hoping to secure an internship for the coming summer break.

My previous summer internship was at Neel Metal Fanalca Environment Management, where I was involved with the maintenance of the company's extensive fleet of vehicles. I gained valuable practical experience in an industrial setting which complemented my design experience with the University of Michigan Solar Car Team. I designed the braking system for the solar car *Infinium* in view of the International Solar Challenge in 2009.

I love to play sports, particularly soccer and cricket and always attempt to set aside time for recreation amidst my hectic schedule. Eventually, I hope to deepen my knowledge in the thermo sciences at graduate school and plan to enter the industry in the future.

**Kah Wee Liew**

I am from Malaysia; a country situated near the equator and is hot and humid all year long. I live in Kuala Lumpur, the capital of Malaysia, where one of the world's tallest buildings in the world, the Petronas Twin Towers is visible from my room. I grew up playing Lego and assembling Tamiya model cars, starting my interest in the field of engineering. I have never looked back since, although my parents have frequently encouraged me to change my mind and go to medical school instead.

For the past 3 years, I have been interning at a construction company, Bauer (Malaysia), a branch of Bauer Spezialtiefbau GmbH. Bauer is a German company which specializes in building foundations and sub-structures, as well as manufacturing construction rig and equipments. I was attached to Bauer Malaysia's workshop, where all construction rigs are serviced or modified to fit specific drilling needs. There, I had the opportunity to take apart and assemble 100 tonne rigs, manufacture incredibly huge components for the rigs, be part of a crew which goes on site to service rigs, as well as interacting with workers of several nationalities.

I will be graduating in either December 2010 or April 2011 depending on my situation. I hope to work in the field of heavy machinery or biomedical engineering after I graduate. I plan to further my studies later at MBA level at the University of Malaya, Malaysia, hopefully paying my own way through.

**Aditya Chabria**

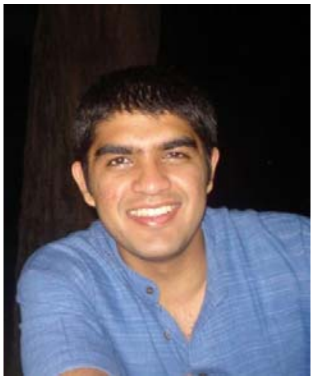

I was born and brought up in Bangalore, India where I completed my high school. I did my freshman and sophomore years of engineering at International Centre for Applied Sciences, Manipal University. I transferred into the University of Michigan in the Fall of 2008 and am graduating in April 2010 with my Bachelors in Mechanical Engineering degree. Future plans involve work experience for a couple of years and then I plan to do my Masters in Business Administration. I plan to own and run a company one day.

Mechanisms and machinery have always fascinated me which have led me to believe that mechanical engineering is apt for me. From childhood I have been exposed to a manufacturing environment and I have always been part of the family business which has given me immense exposure into mechanical engineering.

During the summer of 2009 I designed and manufactured an injection molding tool at OMNI Matrix India Pvt. Ltd. I ran production runs of the same, identifying improvements and performing tool modifications. This summer I plan to design and manufacture a stamping tool at the same company to gain an understanding of sheet metal working.