Intonation of Middle School Violinists:
The Roles of Pitch Discrimination and Sensorimotor Integration

by

Molly K. Baugh

A dissertation submitted in partial fulfillment
of the requirements for the degree of
Doctor of Philosophy
(Music: Music Education)
in The University of Michigan
2020

Doctoral Committee

Professor Michael Hopkins, chair
Associate Professor Kate Fitzpatrick
Professor Brian P. McCall
Associate Professor Carlos Rodriguez

Molly K. Baugh

mkbaugh@umich.edu

ORCID iD: 0000-0002-9207-3218

DEDICATION

To Mom and Dad.

Thirty years ago, when I asked if I could join the school orchestra, you said “yes,” and you’ve been there for me every step of the way.

I love you.

ACKNOWLEDGEMENTS

When I chose to leave my position as a public-school orchestra director, I made a commitment to pursue research that would lead to practical applications for teachers. I am deeply grateful to my dissertation chair, Dr. Michael Hopkins, for helping me realize this purpose. Over the past four years, Dr. Hopkins has been a consistent source of insight and advice as I navigated this dissertation, this degree, and the transition from public-school orchestra director to teacher educator and scholar. I am honored to build upon his research in this dissertation.

I would also like to thank my dissertation committee members, Dr. Kate Fitzpatrick and Dr. Carlos Rodriguez, and Dr. Brian McCall for their thoughts and feedback on this project. They have encouraged me to challenge my assumptions and consider multiple perspectives. I especially appreciate Dr. McCall's assistance with Stata coding.

I would also like to thank my friends and fellow graduate students, Anand Sukumaran and Casey Collins, for their generous assistance with some of the analysis.

I am deeply grateful to the over 200 students who participated in this project and their teachers who shared their classrooms with me. Special thanks also go to the school principals and district administrators who gave their approval for me to work with their students.

All projects start with an idea. The idea for looking at the connection between aural and motor skills came out of a conversation I had with Abby Alwin, orchestra director at a middle school in Ann Arbor.

I have been blessed with dear friends who have encouraged me throughout this process. Dr. Charlene Dell has been a wonderful sounding board for ideas. My work as a public-school teacher and as a teacher educator have benefited from her sage advice. I am also grateful to Jessica Stephens for all our conversations about teaching middle school orchestra.

Throughout my life, my family has been my greatest source of love, support, and encouragement. My parents, Tom and Teresa Baugh, have helped me weather every storm (which is saying something when you come from Oklahoma). Their love, encouragement, and advice have supported me through my career as an orchestra director and my work as a graduate student. Several drafts of this manuscript have benefited from Mom's careful editing.

I would also like to thank my sister Megan, Aunt Tammy, and Uncle Rob for all their love and support. Since I began this degree, we welcomed my brother-in-law Jason, and my now three-year-old nephew, Theodore, into our family. Theo has helped me keep a reasonable perspective on life. After all, aren't waffles on the weekends always important? Lastly, I would like to honor my grandparents, Jim and Mary Baugh and June Mofield.

And finally, I give thanks to God, for I can do all things through Christ who strengthens me. – *Philippians, 4:13.*

TABLE OF CONTENTS

LIST OF TABLES

LIST OF FIGURES

LIST OF APPENDICES

ABSTRACT

Intonation in string instrument performance consists of the perception of musical pitch and the motor skills necessary to produce musical pitch. Scholars in cognitive psychology have suggested that the association of perception and motor skills results in the formation of sensorimotor skills which play a key role in skilled behaviors, including music performance. The purpose of this study was to examine the extent to which pitch discrimination and sensorimotor integration explain the intonation of middle school violinists.

Specific research questions were: (1) What are the correlations among pitch discrimination threshold and the following performance variables with and without auditory feedback: intonation error, intonation precision, interval error, and interval precision? (2) To what extent do pitch discrimination threshold and intonation error with masked auditory feedback explain intonation error with normal auditory feedback of middle school string players when controlling for student characteristics of grade, years of experience, private lessons, handedness, finger placement markers, weekly practice time, and school? (3) Do intonation error or interval error differ according to the left-hand finger(s) used to create the pitch(es)?

Participants (*N* = 179) were violinists from middle schools in Michigan and Oklahoma. Each participant completed three tasks: a pitch discrimination task, a performance task, and a musical background questionnaire. In the pitch discrimination task, participants heard 16 pairs of pitches and for each pair, adjusted the second pitch to match the first. In the performance task, participants performed a 2-octave G-major scale under two conditions: normal auditory feedback and masked auditory feedback. To mask auditory feedback, participants performed while wearing noise-canceling headphones and listening to background noise. One variable, pitch discrimination threshold, was measured from the pitch discrimination task. Four variables were measured from the performance task: intonation error, intonation precision, interval error, and interval precision. The musical background questionnaire collected demographic and musical experience information.

Descriptive statistics of the study variables indicated that intonation error under normal auditory feedback conditions was over three times greater than pitch discrimination threshold. Participants performed better under normal auditory feedback conditions than masked feedback conditions. Mean differences for each performance variable between the two conditions were significant but did not exceed 5 cents.

Results for the research questions indicated a significant, moderate correlation between pitch discrimination threshold and intonation under normal auditory feedback conditions. Moderate positive correlations were found between intonation error and precision and between interval error and precision. A hierarchical multiple regression model revealed that intonation error under masked auditory feedback conditions was the strongest predictor of intonation error under normal auditory feedback conditions. Pitch discrimination threshold was a significant, but weaker, predictor of intonation error under normal auditory feedback conditions. Lastly, a regression model with student fixed-effects revealed that pitches performed with the second finger were significantly less accurate than those performed with the first or third fingers. Participants also performed whole steps more accurately than half steps.

Collectively these results offer support for sensorimotor integration as an explanation of intonation. Suggestions for future research and implications for pedagogy are discussed.

CHAPTER I

Introduction

Intonation, the “ability of a musician to produce the correct pitch of a note within a specific musical context,” is a constant challenge for string players (Chen et al., 2008, p. 493). Pitch is a human construct resulting from the perception of frequency, a physical property of sound. The frequency of a pitch on a string instrument is related to the length, tension, and density of the vibrating string. While playing, the performer alters the length of the vibrating string by pressing the string to the fingerboard with the left-hand fingers. String instruments without frets (e.g. violin, viola, cello, and double bass) allow the performer to produce pitches along a continuous range of frequencies. Consequently, intonation accuracy is contingent upon the performer’s ability to perceive and discriminate minute differences in pitch and to place the left-hand fingers accordingly.

Pitch discrimination is the “ability to distinguish between two successive pitches or two dissimilar examples of a single pitch” (Morrison & Fyk, 2002, p. 183). The pitch discrimination threshold, or just noticeable difference, refers to the smallest difference that can be discerned between two pitches (Oxenham, 2015). Research in acoustics has revealed that children attain pitch discrimination thresholds similar to those of musically untrained adults between the ages of 8 and 13 (Buss et al., 2017; Fancourt et al., 2013). Pitch discrimination thresholds further decrease with musical training (Hopkins, 2014; Yarbrough et al., 1995; Yarbrough et al., 1997).

String pedagogues have stressed the importance of aural skills to performing with good intonation (Benham et al., 2011; Flesch, 1924; Galamian, 1962; Green, 1966; Hopkins, 2012, 2019). According to Elizabeth Green (1966), "things are only in tune if they sound in tune. The ear alone can identify pitch on the strings" (p. 4). The *ASTA String Curriculum* (Benham et al., 2011) identified Tonal Aural Skills as one of 11 main content areas. Gordon (2007) asserted that aural skills, specifically audiation, are essential to informed musicianship, and the early stages of the Suzuki Method are based entirely on aural learning (Suzuki & Suzuki, 1983).

Musicians must be able to match the pitches they perform to pitches from other sound sources such as a tuning pitch, or a pitch played by another musician in an ensemble. Accordingly, the musician must possess the aural skills to be able to discern whether the pitches match, make tuning adjustments as necessary, and discern the outcome of those adjustments. Research has consistently shown that pitch-matching abilities improve with age and musical training (Geringer, 1983; Geringer et al., 2014; Morrison, 2000; Yarbrough et al., 1995; Yarbrough et al., 1997).

Often a musician must determine whether a pitch is in tune in the absence of an external sound source, such as during a solo performance or individual practice. This requires the musician to possess an internal, aural image of the music against which to compare the performance. Many approaches to music education including the Suzuki Method, Orff-Schulwerk approach, Kodály approach, and Music Learning Theory place a high priority on developing children's aural skills. In the Suzuki Method (Suzuki & Suzuki, 1983), children are expected to listen frequently to recordings of the pieces they will learn to play. Familiarity with the sound of the music guides the student's practice and performance efforts. The Orff-Schulwerk approach (American Orff-Schulwerk Association, 2020) emphasizes learning music aurally and through movement before introducing students to musical notation. The Kodály approach emphasizes the importance of singing. “Singing best develops the inner, musical ear,” and “solfege is the best tool for developing the inner ear” (Organization of American Kodály Educators, 2020).

Of the aforementioned approaches, Music Learning Theory (Gordon, 2007) places the greatest emphasis on audiation, or hearing music when sound is not physically present. Specifically, audiation is the “process of assimilating and comprehending music we have just heard performed or have performed sometime in the past… [as well as] music that we may or may not have heard but are reading in notation or composing or improvising” (p. 4). Gordon suggested that when students can audiate well, the ear will guide the hand, and the teacher will spend less time addressing the physical aspects of instrument performance such as posture, instrument position, and finger placement.

Music education researchers have examined the connection between pitch discrimination and intonation with mixed results. No correlation was found in studies by Morrison (2000), Yarbrough et al. (1995), or Yarbrough et al. (1997); however, Hopkins (2015) found a significant, moderate correlation between pitch discrimination and instrument tuning accuracy. Still other studies (Demorest, 2001; Demorest & Clements, 2007; Geringer, 1983) found correlations between pitch discrimination and intonation for some, but not all, participant groups. The lack of consistent, strong correlations between pitch discrimination and intonation within the research does not contradict the belief that pitch discrimination is essential to playing with good intonation. These studies employed a wide variety of data collection procedures and analysis approaches that renders comparisons among findings difficult (Demorest, 2001). Another interpretation of the collective findings is that pitch discrimination alone cannot adequately explain intonation accuracy (He & Zhang, 2017; Hopkins, 2015; Morrison & Fyk, 2002; Pfordresher, 2019; Pfordresher & Brown, 2007; Schlegel & Springer, 2018). This has led researchers to consider other aspects of musical performance. One possibility, noted by Hopkins (2015) and Morrison & Fyk (2002), is that students may not possess sufficient control over the complex motor skills necessary to perform pitches as accurately as students may perceive those pitches.

Motor Skills in String Performance

Playing a string instrument requires the coordination of complex, bimanual, asymmetrical motor skills (Baader et al., 2005). Motor skills are "activities or tasks that require voluntary control over the movements of the joints and body segments to achieve a goal" (Magill & Anderson, 2016, p. 3). During string performance, the movements of each arm differ in range, direction, force, and speed. The left arm and shoulder position the hand in connection to the fingerboard to allow the musician to depress the string, shift positions, and use vibrato. The right arm controls the speed, weight, placement, and angle of the bow with respect to the strings. Intonation is largely determined by the precision of left-hand finger placement; however, the quality and consistency of tone production by the right hand and arm also influence pitch.

Research has provided detailed descriptions of the movements involved in string performance. In these studies, participants were video recorded as they performed with markers or sensors placed on their fingers, hands, and arms (Ancillao et al., 2017; Baader et al., 2005; Konczak et al., 2009). Baader et al. (2005) measured left-hand finger lift and timing as well as coordination between bow movement and left-hand finger movement of violinists. They found differences in left-hand finger movements according to whether intervals performed were ascending or descending. Kinoshita and Obata (2009) analyzed the force of left-hand finger placement on the fingerboard and found performers' left-hand finger force was greater at louder dynamic levels and greater at slower tempi. Overall, the ring and little fingers exerted less force than the index and middle fingers.

Physiological constraints and individual physical differences influence individual motor skills (Furuya et al., 2014; Watson, 2006). Finger independence is necessary for string performance; however, the organization of muscles, tendons, and motor neurons limits the ability of the fingers to move independently of each other. Baader et al. (2005) observed this among violinists. When a violinist placed one finger on the fingerboard, the adjacent fingers also moved. This was more pronounced between the third and fourth fingers compared to the first and second fingers. According to Watson (2006), muscles and tendons in the hand and fingers are not organized in the same way for all individuals, and some variations have been observed in up to 40% of hands. Watson suggested that due to individual differences, "regardless of the degree of training, not all musicians are capable of the same finger movements" (p. 529).

Musical performance places spatial, temporal, and serial demands upon performers' motor skills (Pfordresher, 2019; Zatorre et al., 2007). Accurate left-hand finger placement requires precise spacing between the fingers, and the distance between pitches on the fingerboard changes according to the register of those pitches and the position in which they are played (Chen et al., 2008, 2013). The closer to the bridge that pitches are fingered, the less space there is between the pitches on the fingerboard. Finger placement during performance occurs in time according to the tempo and rhythm of the music. Motor control scholars have identified a speed-accuracy trade-off in which the faster the movement, the less accurate the result of the movement (Fitts, 1954; Schmidt et al., 2019). This suggests that intonation at faster tempi may be less accurate compared to intonation and slower tempi. Lastly, Pfordresher (2019) described music as a sequential behavior. The order of fingers to be placed on the strings is prescribed by the order of pitches to be performed. Different orders of pitches present different demands on the movements of the left-hand fingers (Baader et al., 2005).

String pedagogues consistently emphasize the importance of motor skills to string performance. Due to the substantive differences between the motor movements of the left and right hands, pedagogical texts typically address left- and right-hand skills separately. The *ASTA Curriculum* (Benham et al., 2011) lists the left-hand skills of string instrument performance:

> Students perform with the correct placement and angle of the left arm-wrist-hand-fingers to the instrument; demonstrate position that is balanced and free of tension; play with independence of fingers, ease of motion, and control of finger weight; produce characteristic tone, with vibrato (as appropriate); show understanding and ability to apply fingerings, finger patterns, shifting, extensions. (p. 18)

Descriptions, instructions, and diagrams of left-hand motor skills and their connection to intonation are found in beginner method books (Allen et al., 2000; Phillips et al., 2010), curriculum (Benham et al., 2011), pedagogical texts (Flesch, 1924; Galamian, 1962; Green, 1966; Haman & Gillespie, 2018; Hopkins, 2019; Rolland & Mutschler, 2007), and practitioner articles (Brannen, 2015; Cotik, 2019; Klein, 2013).

Development of proper left-hand position and motor skills has also been the focus of research studies. Salzberg and Salzberg (1981) found that beginning students with poor left-hand positions responded differently to corrective feedback from teachers, and that once established, left-hand positions were generally resistant to change. Mongeon (2004) examined the effect of left-hand strengthening exercises on the intonation and left-hand facility of beginning string students. Students who participated in the exercises demonstrated increased facility of the left-hand position and finger movements compared to a control group. Intonation scores were also higher compared to students who did not participate in the exercises.

String pedagogues have addressed the spatial demands of left-hand finger placement by isolating and teaching finger patterns (Benham et al., 2011; Howell & Howell, 2003; Green, 1966; Hopkins, 2019). Finger patterns refer to specific orders of half- and whole-step spacing among the fingers of the left hand. Many teachers engage students in performing a set of finger patterns during daily instruction and practice to improve note accuracy and intonation. Finger placement markers (FPMs) are another commonly used teaching tool. FPMs are tapes, stickers, or other markers affixed to the fingerboard that serve as a visual and tactile guide for young players as they learn where to place their fingers. Much debate exists about the merits of using finger placement markers as teaching aids, but Bergonzi (1997) found that for beginning string students, the use of FPMs was associated with more accurate intonation than non-use.

Despite the importance of motor skills to string performance, emphasis on motor skills alone is no more likely to explain intonation than emphasis on pitch discrimination alone (He & Zhang, 2017; Pfordresher & Brown, 2007). In a study designed to determine causes of poor-pitch singing among vocalists, Pfordresher and Brown (2007) examined motor skills independently of singing intonation. They found that participants had the physical ability to produce a wide range of pitches but were unable to imitate specific pitches within that range accurately. This led Pfordresher and Brown to propose that poor-pitch singing in vocal performance was a result of poor sensorimotor integration, or the inaccurate connection between perceptual skills and motor skills.

Sensorimotor Integration: The Coupling of Perception and Action

Scholars have proposed that sensorimotor integration, the coupling of perception and action, underlies all skilled behaviors (Brown, 2013; Maes et al., 2014). In the twentieth century, behavioralists viewed perception and action as two separate and distinct processes of stimulus and response (Donders, 1969; Sternberg, 1969). In contrast, recent scholarship in cognitive psychology has proposed that perception and action are not merely associated but form integrated representations in the brain (Hommel et al., 2001).

Playing a musical instrument is a “special, highly illustrative case” of sensorimotor integration (Maes et al., 2014, p. 4). According to Pfordresher (2019)

> during learning, performers repeatedly experience associations between planned actions and perceptual feedback. As a result, with time the perceptual representations of a sound pattern and the actions one might use to create that same sound pattern form an integrated representation that may exist separately from either the perceptual representation or the motor representation on its own. (p. 35)

Neurological research with musicians supports the existence of these integrated representations. Piano performance without sound has revealed brain activity in both aural and motor related areas of the brain. Similarly, listening to music without performing it has also revealed activity in both aural and motor areas of the brain (Baumenn et al., 2005; Engel et al., 2012; Haueisen & Knösche, 2001; Wollman et al., 2018).

Perceptual feedback is “information from the sensory system that indicates the status of a movement to the central nervous system” (Magill & Anderson, 2016, p. 93). Scholars have distinguished this form of feedback from augmented feedback, or information provided by an external source such as a teacher or a device (Schmidt et al., 2019). In general, studies of intonation in musical performance have focused largely on the auditory feedback associated with performance; though studies of intonation and instrument tuning have also addressed the role of augmented feedback (Salzberg, 1980; Schlegel & Springer, 2018; Sogin, 1997).

Forms of perceptual feedback include visual, auditory, haptic (sensation of touch), proprioceptive (awareness of the body in space), and vestibular (sense of balance). Musical performance may generate feedback in some or all of these forms. The performer may receive auditory feedback from listening to the sound of the performance, visual feedback from observing finger placement or bow motion, haptic feedback from touching the instrument, proprioceptive feedback from the awareness of where the fingers, hands, and arms are in space, and vestibular feedback from an awareness of balance of the body with the instrument. For most activities (e.g. walking, driving a car, riding a bicycle, etc.), the role of feedback is to provide information about the status of movement with respect to the intended goal. Musical performance is a unique activity in that the goal of the motor skills and the auditory feedback generated by the motor skills are one and the same (Brown, 2013; Maes et al., 2014.; Pfordresher, 2019).

The integration of auditory feedback and motor skills is familiar to string pedagogues (Benham et al., 2011; Flesch, 1924; Galamian, 1962). The *ASTA Curriculum* (Benham et al., 2011) includes ear-to-hand skills under a broader category of aural skill development, emphasizing connection between aural perception and motor skills. Galamian (1962) identified this connection as critical to violin performance:

> The key to faculty and accuracy and ultimately, to complete mastery of violin technique is to be found in the relationship of mind to muscles, that is, in the ability to make the sequence of mental command and physical response as quick and precise as possible.

> Therein resides the fundamental principal of violin technique that is being overlooked and neglected by far too many players and teachers. (p. 2)

Sensorimotor associations are formed during learning as the performer associates planned motor movements with desired outcomes (Maes et al., 2014; Pfordresher, 2019). Development of expertise in musical performance requires extensive refinement of these associations over extended practice. Scholars have used a feedback model to describe this process (Maes et al., 2014; Magill & Anderson, 2016; Pfordresher, 2019). According to the feedback model, the performer uses auditory feedback from performance to inform future actions and/or correct errors. The feedback model assumes the performer relies on the presence of auditory feedback to plan and execute future movements. Flesch (1924) noted the importance and limitations of the feedback model for correction of intonation errors. “Everything depends on making our sense of hearing so acute that an impure note makes the most disagreeable impression on us, and in this way automatically brings with it a corrective movement” (p. 21). However, “the shorter the note…the more prominently the manual movement of the skill comes to the fore. We no longer have the time to carry out the complicated procedure just described” (p. 23).

Feedback models help explain how connections between feedback and motor skills are formed. However, they are too slow to explain accuracy in musical performance at high speeds because, as Flesch described, the performer must execute motor movements faster than there is time to process the auditory feedback from those movements (Pfordresher, 2019; Wolpert et al., 1995). Similarly, feedback models are unable to explain how musicians are able to perform accurately when auditory feedback is absent (Maes, et al., 2014; Pfordresher, 2003; Pfordresher & Brown, 2007). To describe this phenomenon, scholars have proposed the existence of internal models.

An internal model is a “system that mimics the behavior of a natural process” (Wolpert et al., 1995, p. 1880). Internal models may be forward or inverse models. “Forward internal models represent an information flow from action to perception” (Maes et al., 2014, p. 2). In a forward model, the individual activates the motor skills program(s) in the brain that are associated with a predicted outcome. This occurs whether or not the individual actually executes the motor skills. A musician who has developed strong auditory-motor connections can engage the required motor skills to create a desired sound without needing to hear the actual result. The forward model provides a satisfactory explanation for the ability to execute fast and accurate passages for which relying on feedback loops would be too slow (Baader et al., 2005; Brown, 2013; Maes et al., 2014; Pfordresher & Brown, 2007). In contrast to forward models, inverse models “represent an information flow from perception to action” (Maes et al., 2014, p. 2). Inverse models explain how a musician can perceive an aural stimulus and predict the motor skills necessary to create that stimulus. Examples include physical movement in response to music or call-and-response activities.

Researchers have examined sensorimotor integration and support for the existence of forward models in music performance by asking participants to perform the same material under normal auditory feedback conditions and under conditions in which the auditory feedback is masked, delayed, or altered (Brown, 2013; Finney, 1997; Kajihara et al., 2013; Pfordresher, 2005; Scheerer & Jones, 2012). Differences in performance accuracy among the different conditions provide insight into the existence and nature of internal models. The majority of these studies have been conducted with pianists due to the relative ease of manipulating auditory feedback from an electric piano (Brown, 2013; Finney, 1997; Finney & Palmer, 2003; Pfordresher, 2005). When compared with performance under normal auditory feedback conditions, masking of auditory feedback in piano performance had no significant effect on pitch accuracy (Finney, 1997; Pfordresher, 2005).

Researchers have disrupted auditory feedback through temporal delay (Goebel & Palmer, 2009; Pfordresher, 2003) and pitch alteration (Kajihara et al., 2013; Pfordresher, 2005). In studies examining the effects of delayed auditory feedback on piano performance, participants performed under normal auditory feedback conditions and then again with headphones in which they heard each pitch of their performance slightly after they struck the piano key. Delayed auditory feedback affected the timing but not the pitch accuracy of performance (Finney, 1997; Pfordresher, 2003). Auditory feedback has also been disrupted by altering pitch content. Pfordresher (2005) found that when the pitches heard as auditory feedback closely resemble but do not exactly match the expected pitches, error rates increased. In one of the few studies with string players, Kajihara et al. (2013) found that audio feedback with altered pitches resulted in increased error rates.

Pfordresher (2005, 2019) found the difference in performance error between masked and altered auditory feedback conditions strongly supports the existence of forward models. Forward models describe how a performer can execute motor skills that will lead to an expected auditory outcome. Masking auditory feedback does not interfere with the expected auditory outcome. In contrast, altering auditory feedback conflicts with the expected auditory outcome. This disrupts the forward model and affects the ability of the performer to plan motor actions.

While research has indicated no effect of masking auditory feedback on pitch accuracy in piano performance, masking auditory feedback has been associated with lower intonation accuracy in vocal and string performance (Beck et al., 2017; Chen et al., 2008, 2013; Mürbe et al., 2002). Intonation in vocal and string performance is measured on a continuum whereas pitch accuracy in piano performance is associated with discrete keys. Consequently, intonation requires more precise control for vocalists and string performers than pianists. Chen et al. (2008, 2013) examined shifting accuracy of adult cellists with and without auditory feedback. Cellists were significantly less accurate and less precise in the absence of auditory feedback. The authors concluded that compared to pianists, string players may rely more on auditory feedback for the micro adjustments necessary to perform with accurate intonation.

Need for the Study

String pedagogues have stressed that strong aural skills and motor skills are necessary to perform with accurate intonation (Benham et al., 2011; Galamian, 1962; Green, 1966; Hopkins, 2012). Previous research in music education has examined the relationship between pitch discrimination and intonation with mixed results (Demorest, 2001; Demorest & Clements, 2007; Hopkins, 2015; Morrison, 2000; Yarbrough et al., 1995; Yarbrough et al., 1997). The lack of consistent findings may be due to the wide variety of methodological and analytical approaches among studies (Demorest, 2001). Moreover, this inconsistency also suggests that pitch discrimination alone does not adequately explain intonation.

Cognitive psychologists have employed music performance to study sensorimotor integration (Brown, 2013; He & Zhang, 2017; Pfordresher, 2003; 2005). While learning, individuals associate motor sequences with desired outcomes, and these associations form cognitive representations in addition to those for motor movement and auditory perception separately (Hommel et al., 2001; Maes et al., 2014; Pfordresher, 2019). This has led to a perspective of intonation in musical performance as a sensorimotor skill (Beck et al., 2017; He & Zhang, 2017; Pfordresher, 2005; Pfordresher & Brown, 2007). Pfordresher and Brown (2007) found that sensorimotor skills explained intonation in vocal performance better than pitch discrimination, motor skills, or memory. However, research of sensorimotor association in string performance is very limited (Chen et al., 2008, 2013; Kajihara et al., 2013).

The participants in studies of sensorimotor integration and musical performance, with few exceptions (Beck et al., 2017), have been adult musicians and nonmusicians. Similarly, few studies of intonation in string performance have involved participants with less than five years of experience (Bergonzi, 1997; Dell, 2003; Hopkins, 2014, 2015; Salzberg & Salzberg, 1981; Smith, 1995). More research is needed to examine the relative influence of perception and sensorimotor skills on performance of students in the early years of instruction.

The motor skills required for string instrument performance are highly complex, and this presents challenges for research with string students in the early years of instruction. Research in music education and motor skill development has indicated that in the early stages of learning, the physical demands of playing an instrument may be so complex as to render attention to intonation very difficult for the young musician (Fitts & Posner, 1967; Morrison & Fyk, 2002). Based on 13 years of teaching experience with young string students, I believe students with at least two years of instruction possess sufficient performance skills necessary to perform with and without auditory feedback. This would allow for a reasonable comparison of performance accuracy under the two conditions which, in turn, may provide some evidence regarding the presence of sensorimotor associations in young string students. In the United States, public school string instruction typically begins in the fourth, fifth, or sixth grades (Smith et al., 2018); therefore, it is likely that most middle school students will have had between 2 and 4 years of string instruction.

Intonation is a challenge for students and teachers alike. Examination of the role of sensorimotor integration in the performance of string students with less than five years of experience may yield evidence of the extent to which students use auditory feedback while performing. Furthermore, such research may also yield evidence regarding the existence of forward models in the early stages of string instrument learning. Previous research in vocal performance with adult participants has indicated that sensorimotor skills may be a better explanation of intonation accuracy than pitch discrimination or motor skills separately (He & Zhang, 2017; Pfordresher & Brown, 2007). Similar research with young string students may yield additional insights regarding intonation as a sensorimotor skill, which may yield insights for teaching intonation.

Purpose Statement

The purpose of this study is to examine the extent to which pitch discrimination and sensorimotor skills explain the intonation of middle school violinists.

Research Questions

1. What are the correlations among pitch discrimination threshold and the following performance variables under conditions of normal and masked auditory feedback: intonation error, intonation precision, interval error, and interval precision?
2. To what extent do pitch discrimination threshold and intonation error with masked auditory feedback explain the intonation error with normal auditory feedback of middle school string players when controlling for student characteristics of grade, years of experience, private lessons, handedness, finger placement markers, weekly practice time, and school?
3. Do intonation error or interval error differ according to which left-hand finger(s) were used to create the pitch(es)?

Definitions

For the purpose of this study, the following terms are defined as follows:

Feedback is “information from the sensory system that indicates the status of a movement to the central nervous system” (Magill & Anderson, 2016, p. 93).

Forward Model is an internal model in which the individual predicts a desired outcome and activates the associated the motor actions necessary to create the outcome (Wolpert et al., 1995).

Internal Model is a “system that mimics the behavior of a natural process” (Wolpert et al., 1995, p. 1880).

Intonation is the “ability of a musician to produce the correct pitch of a note within a specific musical context” (Chen et al., 2008, p. 493).

Intonation Error is the absolute value of the cent deviation between a reference pitch and a performed pitch.

Intonation Precision is the standard deviation of the signed values of intonation errors.

Inverse Model is an internal model in which the individual estimates the motor actions that caused a perceived effect (Wolpert et al., 1995).

Motor skills are “activities or tasks that require voluntary control over the movements of the joints and body segments to achieve a goal” (Magill & Anderson, 2016, p. 3).

Pitch is a human construct related to the frequency, a physical property of sound (Oxenham, 2015).

Pitch Discrimination is “ability to distinguish between two successive pitches or two dissimilar examples of a single pitch,” (Morrison & Fyk, 2002, p. 183).

Sensorimotor Integration is the “learned association between planned actions and perceptual feedback” (Pfordresher, 2019, p. 35).

CHAPTER II

Review of Literature

Intonation in string performance involves a blend of perception and action. In Chapter 1, I presented an overview of pitch perception, motor skills, and sensorimotor integration related to music performance. In this chapter I present research studies from the fields of music education, acoustics, psychology, and motor control to inform the design and methodology of the current study, the purpose of which is to examine the extent to which pitch discrimination and sensorimotor skills explain the intonation of middle school violinists. This chapter consists of three sections. In the first section I review research related to pitch perception and intonation. The second section consists of a review of motor skill research related to finger movement in instrumental performance. In the third section, I review research related to sensorimotor integration in piano, vocal, and string performance. The chapter concludes with a discussion of how the research reviewed informed the current study.

Measurement of Pitch Discrimination and Intonation

Scholars have employed a variety of approaches to study and measure pitch perception and intonation which has rendered interpretation of this body of work challenging. Prior to reviewing studies of pitch perception, a brief description of the tasks used to measure perception and intonation is warranted.

Pitch is a human construct related to the frequency of sound waves; consequently, pitch perception cannot be measured directly. Rather, it must be inferred from responses to carefully-designed tasks. Scholars have used two general types of tasks to measure pitch perception: same/different tasks and method of adjustment (MOA) tasks. Same/different tasks consist of a series of test items in which participants hear two or more musical tones and are asked to identify the tone that differs from the other tones. In adaptive difficulty forms of same/different tasks, the difference between the different tone and the surrounding tones changes with each subsequent item according to the accuracy of the participant’s responses. Pitch discrimination thresholds (PDTs) reflect the smallest difference that the participant can detect.

The other common task used by scholars to measure PDT is a MOA task. In this approach, the participant hears two tones and uses a knob or computer slider to adjust one of the tones until the participant perceives that the tones match. PDT is determined by the difference between the reference tone and the adjusted tone.

Researchers have employed two general approaches to measure intonation. The most common approach is to measure the frequency of a performed pitch and compare that frequency to the frequency a corresponding reference pitch (Demorest, 2001; Demorest & Clements, 2007; Hopkins, 2015; Morrison, 2000; Yarbrough et al., 1995; Yarbrough et al., 1997). The ability to record sound digitally and access to inexpensive software (e.g. Praat, Adobe Audition, LogicPro) have allowed simple and sensitive frequency analysis. Prior to this availability, researchers used tuners to measure the frequency of pitches from an audio recording. Other scholars employed a Likert-type scale and expert raters to rate intonation from good to poor (Smith, 1995) or sharp to flat (Geringer et al., 2012; Geringer et al., 2014).

Frequency is a physical property of sound defined as the number of oscillations of the sound wave per second (Hz). Perception of the difference between two pitches reflects the ratio of, rather than the difference between, the frequencies of those pitches. For example, the simplest frequency ratio (2:1) is perceived as the musical interval of an octave. The perception of pitch is related to frequency, but this relationship is logarithmic, not linear.

In Western music, the octave is divided into 12 pitch classes labeled semitones. The equal temperament tuning system[1] assigns a value of 100 cents to each semitone. The difference in frequency of any pair of pitches may be expressed in cents according to the following formula:

$$¢ = 1200 * \log_2 \frac{f_2}{f_1}. \tag{2.1}$$

in which f_2 and f_1 are the frequencies of the response pitch and reference pitch respectively. If $f_2 > f_1$ the resulting cent value will be positive, indicating an error in the sharp direction. Conversely if $f_2 < f_1$, the resulting cent value will be negative, indicating an error in the flat direction. Expression of differences between pitches in cents provides a means of comparison between any pair of pitches in any frequency register. Though most studies reviewed here expressed frequency differences in cents, studies in acoustics have expressed frequency differences as a percentage of the frequency of the reference pitch (Buss et al., 2017).

Throughout this chapter, I describe the results from each study as originally presented by the authors. For studies that reported results in units other than cents, I include the cent equivalent in parentheses when the article provided sufficient data to allow me to determine the cent value. When referring to specific pitches, I follow the standard practice of a capital letter to identify the pitch name and a number to indicate the octave designation (e.g. middle C = C4).

Pitch Perception and Intonation

Pitch discrimination is the "ability to distinguish between two successive pitches or two dissimilar examples of a single pitch" (Morrison & Fyk, 2002, p. 183). Findings from the field of

---

[1] Other tuning systems (e.g. Just Tuning and Pythagorean Tuning) do not assign equal distance values between all semitones. As all studies presented in this chapter use Equal Temperament, further discussion of different tuning systems is beyond the scope of this review.

acoustics concur that children’s pitch discrimination thresholds typically reach levels of nonmusician adults between 8 and 13 years of age (Buss et al., 2017; Dawes & Bishop, 2008; Fancourt et al., 2013; Keller & Cowan, 1994; Taylor et al., 2013). Fancourt et al. (2013) examined pitch-change and pitch-direction discrimination of 130 musically untrained children and 13 musically untrained adults. In the pitch-change discrimination task, participants heard three tones: two steady tones and one pitch glide. In the pitch-direction discrimination task participants heard three pitch glides: two in one direction and one in the opposite direction. Participants were asked to indicate the different tone in each set of three. The base frequency was 500 Hz (B4 +21 cents). Each adaptive difficulty task consisted of 18 levels ranging in difficulty from 10 semitones (1000 cents) to .025 semitones (2.5 cents). Results indicated that pitch-change discrimination levels were adult-like between 6–7 years of age and averaged .28 semitones (28 cents). Pitch-direction discrimination thresholds did not reach this level until age 11. The authors suggested that pitch-change and pitch-direction discrimination may be different cognitive processes.

Buss et al. (2017) examined children and adult pitch discrimination thresholds for pure and complex tones. Participants heard and were asked to select the different tone of three tones, two of which were identical. Half of the trials consisted of pure tones while the other half consisted of pitches sung on the syllable /ba/. The default frequency was 250 Hz (B3 +21 cents), and all target pitches were higher than the reference pitch. The authors did not provide a rationale for the decision to include only target pitches sharp of the reference pitch. Frequency differences in the 40-level, adaptive-difficulty trials ranged from 250.5 (1%, 3.46 cents above 250Hz) to 375.6 Hz (43%, 704.72 cents above 250 Hz). Results indicated children’s pitch discrimination threshold levels were linearly related to the log of their age and improved from

15% (242 cents) at age five to 2% (34 cents) by age 10 with adult levels (1.3%, 22 cents) reached by age 11.5. Results also indicated no significant differences in discrimination thresholds between pure tones and complex tones.

Scholars in music education have examined pitch discrimination and its relationship to intonation in a variety of contexts. In general, findings indicate that discrimination skills are more accurate than intonation skills, and both improve with time and training (Geringer, 1983; Hopkins, 2014, 2015; Morrison, 2000; Yarbrough et al., 1995; Yarbrough et al., 1997).

Pitch discrimination and intonation have been examined in the vocal and string performance of elementary students (Geringer, 1983; Smith, 1995). Geringer (1983) compared pitch discrimination and vocal pitch matching of preschool and fourth-grade children.
The pitch discrimination task consisted of 12 pairs, each with the same reference tone. The frequency of the reference tone was not specified other than that all pitches were in the vocal range of the participants. The test frequencies ranged from -600 cents to 300 cents. The specific intervals from the reference pitch were as follows: (a) descending tritone (-600 cents), (b) ascending minor third (300 cents), (c) descending quarter tone (-50 cents), (d) an ascending 1/8 tone (25 cents), (e) a descending 1/8 tone (-25 cents), and (f) a unison tone (0 cents). Each interval was presented once except the unison interval which was presented 4 times. Three versions of the test were created with different orders of the 12 pairs. For each pair, participants were asked to indicate whether the second pitch was the same, different, or unsure. Based on their pitch discrimination scores, participants were assigned to one of three groups (low, middle, high ability).

Participants completed a vocal pitch matching test in which they heard a short melody presented in three different keys and were asked to sing the final pitch after each hearing.

Geringer used a strobotuner to measure and record the vocal pitch matching error in number of semitones (100 cents). Results indicated that the fourth-grade participants had significantly higher pitch matching scores than kindergarten participants, but there was no significant difference in pitch matching according to the three pitch discrimination groups (low, middle, high). The correlation between discrimination and matching was significant and moderate for fourth graders in the high pitch discrimination group. No other correlations between discrimination and matching were significant.

In one of the few studies of intonation and pitch perception of beginning string students, Smith (1995) examined the effectiveness of a pitch-matching training program on students' perception accuracy and compared those results to students' intonation. Participants ($N = 96$) were assigned to either a treatment or a control group. Participants in the treatment group were pulled out of their beginning string class for two, 20-minute sessions per week over 16 weeks. Treatment consisted of 45 exercises. Participants listened to each exercise twice and sang the exercise into a device that provided visual and aural feedback indicating whether the participant sang the exercises correctly. Participants then played the exercise on their instruments. The control group played the exercises in class but did not sing the exercises. Participants completed pre- and post-tests for pitch perception using Collwell's Music Achievement Test. Intonation was measured on a scale of 1–5 by a group of expert string teachers. Results showed significant intonation gains for the treatment group but not for the control group leading the researcher to conclude that perception training could support intonation improvement.

Studies with middle and high school students have addressed pitch perception and intonation of band, choir, and string students. Yarbrough et al. (1995) examined whether knowledge of the direction of mistuning affected the tuning accuracy of middle school woodwind and brass players with 1–4 years of experience. Participants (*N* = 197) completed a method of adjustment (MOA) perception task in which they heard a tuning note (F or B-flat) in the octave associated with their instrument and adjusted a knob on an electric piano to match a second note to the tuning note. Participants also completed an instrument tuning task in which they heard the same tuning note and adjusted their instrument to match the tuning note. In both cases, the researchers preset the tuning knob and instrument either flat or sharp of the tuning note. Participants were randomly assigned to one of three groups. One group was told in both tasks they would begin sharp of the reference pitch. One group was told they would begin flat, and the third group received no information. The authors did not provide summary statistics for the perception task but found that responses erred in the direction of mistuning. Tuning accuracy increased and variability decreased with years of instruction from the first year (*M* = 22.90 cents, *SD* = 20.62) to the fourth year (*M* = 13.67, *SD* = 12.34). Significant differences in tuning resulted only from years of instruction, and tuning erred in the direction of the mistuning No significant correlation was found between perception and performance scores.

Yarbrough et al. (1997) replicated this study with high school woodwind and brass students (*N* = 113) who had 5–7 years of experience. Participants completed two tasks. In the perception task, they heard the tuning note F in the octave associated with their instrument and were asked to match a second tone to the F using a keyboard slider. In the performance tasks, participants were asked to tune their instrument to match the same tuning note. The researchers mistuned the keyboard and the participants' instruments prior to beginning the tasks. Participants were randomly assigned to one of three groups. One group was told they would begin sharp of the tuning note. The second group was told they would begin flat of the tuning note, and the third group was given no information.

The mean tuning error for the perception task was 6.86 (*SD* = 7.76) cents, and the mean tuning error for the tuning task was 8.95 (*SD* = 7.47) cents. The older participants showed a tendency to tune sharp regardless of the direction of the initial mistuning, an effect not observed in the pitch perception task. Unlike the middle school study, no significant differences were found in perception or tuning accuracy according to years of experience. However, taking private lessons was associated with more accurate performance (*M* = 6.14, *SD* = 5.62) than not taking private lessons (*M* = 8.94, *SD* = 8.51). Perception scores were not significantly correlated with performance scores. Taken together, these studies indicate that differences in tuning accuracy appear to diminish as experience increases due either to increased proficiency or the possibility of lower retention of students with lower playing skills.

Morrison (2000) conducted two experiments to examine intonation of band students. In the first experiment, participants (*N* = 137) with 1–4 years of experience matched a single tuning pitch and then performed a four-measure melody while hearing an accurate version of the melody through headphones. Mean error for the single tuning pitch was 10.93 (*SD* = 8.90) cents. Morrison measured the participants’ intonation error for the four occurrences of the second scale degree in the melody. Mean error ranged from 14.07 (*SD* = 15.98) cents to 16.48 (*SD* = 19.36) cents. Participants were more accurate, and variability was lower when matching single pitches than when performing the melody. Participants also demonstrated a general tendency to tune sharp of the reference pitch. The correlation between tuning single pitches and tuning pitches within the melody was weak and positive.

In the second experiment, high school participants (*N* = 167) with 5–7 years of experience were assigned to three groups. Group 1 participants tuned their instruments to a tuning note and then played a short melody. Group 2 participants were told to focus on intonation but did not tune their instruments before playing the melody. Group 3 was the control group. Participants were neither told to focus on intonation nor did they tune before playing the melody. As in Experiment 1, participants were more accurate when matching the single tuning pitch (*M* = 7.05, *SD* = 5.66) than performing pitch within the melody which ranged from 8.58 (*SD*=7.22) cents to 10.27 (*SD* = 6.92) cents. Compared to results from Experiment 1, participants with five or more years of experience were more accurate, and the variability in their scores was lower compared to participants with four or fewer years of experience. No significant differences were found in intonation accuracy according to the three groups. Participants demonstrated a general tendency to play sharp of the reference pitches, and significantly more participants with seven years of experience tended to play sharp than participants with five years of experience.

Demorest (2001) examined the pitch perception and singing accuracy of middle school boys whose voices were changing. Participants (*N* = 34) completed a method-of-adjustment (MOA) perception task consisting of three pairs of pitches in which the second pitch of each pair was mistuned by one semitone. Participants adjusted a knob on a synthesizer until the pitches matched. Participants then completed a performance task in which they heard a series of five pitches and were asked to match each pitch by singing it. Accuracy in the perception task was defined as the cent deviation between the response pitch and the reference pitch. For the production task, responses within 50 cents above or below the target pitch were defined as accurate. Cent deviations from the reference pitches were reported only for responses that fell outside this window.

Participants were grouped as certain, inconsistent, or uncertain singers according to accuracy on the performance task. The mean perception score for certain singers was 32.12 (*SD* = 16.85) cents and 51.50 (*SD* = 22.08) cents for uncertain singers, a significant difference. The mean performance error for uncertain singers was 153.77 (*SD* = 156.09) cents. The mean performance error for certain singers was not reported.

Demorest and Clements (2007) expanded upon Demorest's 2001 study to address the relationship between pitch perception according to vocal range, vocal pitch matching, and pitch-matching context. Participants (*N* = 60) were junior high boys who were part of a choir or general music class. In the perception task, participants heard six pairs of pitches and adjusted an onscreen slider to match the second pitch to the first pitch. The second pitch began a tritone away from the target pitch, and the slider moved in semitone increments. The pitch matching task consisted of eight items in two contexts. In the first context, participants heard and were asked to imitate four pitches. In the second context, participants heard a short melodic sequence and were asked to imitate the last pitch.

Accuracy was defined as the number of pitches matched under each condition. A pitch was determined to match if it fell within 50 cents above or below the target pitch. The authors explained that most listeners would hear pitches as incorrect outside of this range. This range may have been larger than necessary. More recent acoustic research suggests that musically untrained adolescents and adults have discrimination thresholds of 25–30 cents (Buss et al., 2017; Fancourt et al., 2013).

Overall perception accuracy was 3.45 (*SD*=2) pitches. Overall singing accuracy in the single pitch context was 2.75 (*SD* = 1.65) pitches and 3.02 (*SD* = 1.52) pitches in the melodic context. Based on their pitch-matching accuracy scores, participants were grouped as uncertain, inconsistent, or certain singers. The authors found a significant difference between the perception scores of uncertain singers and the perception scores of the inconsistent and certain singers. They suggested that pitch perception might be related to pitch-matching accuracy for these singers. Findings of the 2007 study also indicated that the participants matched pitch better in a musical context compared to matching pitches outside a musical context.

Hopkins (2014) examined pitch discrimination of string players (*N* = 130) in the fifth, seventh, ninth, eleventh grades, and university music majors. Participants completed a Tuning Perception Test in which they matched single pitches and perfect fifths using a MOA task. Discrimination improved with age group and ranged from 25.9 cents for fifth grade participants to 3.5 cents for university participants. Significant differences between accuracy of single-pitch adjustments were found between all grade pairs except for university–eleventh and ninth–seventh grade. For the perfect fifth items, significant differences were found for all pairs except university–eleventh, eleventh–ninth, and ninth–seventh grade. Accuracy was lowest for the lowest-pitched tones. No significant differences in discrimination accuracy were found according to primary instrument or gender.

In Hopkins's (2015) study of the tuning ability of eighth-grade violinists, participants (*N* = 46) completed an adapted version of the pitch perception task from his 2014 study that measured their ability to tune unison and perfect fifth intervals. Participants then tuned two different violins, one with the strings mistuned sharp and the other with the strings mistuned flat. Results indicated a mean pitch discrimination threshold of 5.2 (*SD* = 2.7) cents. Overall tuning error was 8.1 (*SD* = 5.0) cents. Pitch discrimination threshold was significantly lower (more accurate) than tuning error. The correlation between discrimination and tuning accuracy using Spearman's rho was significant and moderate (*r* = .44). In the tuning task, participants erred on the side of mistuning and were more accurate when tuning flat pitches compared to sharp pitches.

Intonation in musical performance involves more than single-pitch discrimination and matching. The performance of scales and melodies requires perception of intervals within musical contexts (Geringer, 1978; Kantorski, 1986; Sogin, 1989). Geringer (1978) compared intonation accuracy and pitch perception of college music students performing a one-octave ascending mixolydian scale. Participants (*N* = 96) performed the scale with and without piano accompaniment. Following the performance, half of the participants (*n* = 48), selected a priori, were told their performance was sharp. The other half were given the initial study directions. Within each of these groups, half of the participants (*n* = 24) performed the scale again with and without accompaniment. The other half of the participants listened to their recorded performance and adjusted the intonation of their recording using a tuning knob.

For the 48 participants who performed the scales a second time, the mean cent deviation (intonation error) was 15.9 cents for pitches during the first performance, and 14.9 cents for pitches performed during the second performance. For the 48 participants who completed the perception task after the initial performance, the cent deviation for performed pitches was 15.5 cents and the cent deviation for their adjusted pitches was 26.3 cents. This is the only study in which participants' performance scores were more accurate than their perception scores. Results also indicated a general tendency to tune and perceive sharp of the target pitches. Cent deviation scores were lower for the accompanied condition compared to the unaccompanied condition, and informing participants that they were sharp did not significantly alter performance accuracy.

Intonation has been found to differ according to pitch register and accompaniment condition. Kantorski (1986) asked 48 college string students to perform a four-note, three whole-step scalar pattern ascending and descending in the upper and lower registers of the instrument under four different accompaniment conditions. Accompaniment conditions included unison, thirds, two octaves, and thirds plus two octaves. Each participant performed the four-note pattern twice in each register under each of the four accompaniment conditions resulting in 16 trials.

Instead of reporting results for individual pitches, Kantorski reported results for each tetrachord. The cent deviation (intonation error) for each tetrachord equaled the sum of the cent deviations of its respective pitches. In general, participants were more accurate in the lower registers. Cent deviation scores across the four accompaniment conditions ranged from 39.5 cents to 61.6 cents. In the upper register, cent deviations ranged from 42.4 cents to 75.4 cents. Cent deviation was lowest for unison (47.7 cents) and two-octave accompaniment (55.8 cents) conditions followed by thirds (68.5 cents) and two-octaves-plus-thirds (63.2 cents) conditions.

Examination of the signed cent deviations indicated a tendency to tune sharp of target pitches with performances in the upper registers significantly sharper than performances in lower registers. Comparison of cent deviations according to instrument revealed the intonation accuracy for bassists (93.8 cents) was significantly lower than that of the cellists (55.3 cents), violists (48.1 cents) and violinists (38.1 cents).

In a similar study, Sogin (1989) also examined intonation in a scalar context. College string students (*N* = 48) performed a four-note, three whole-step scalar pattern ascending and descending with and without vibrato. To measure change of frequency within single pitches, Sogin took readings for the highest and lowest frequencies within each pitch. He also noted which of the two readings occurred first during the pitch. The mean cent deviation of the first measure of each pitch was 3.3 cents and 6.3 cents for the second measure of each pitch. This difference was significant and indicated that participants tended to adjust sharp over the duration of each pitch. No significant differences in cent deviation were found according to instrument, individual pitch, or vibrato. Performance of ascending pitches was more accurate than descending pitches.

Pitch perception and intonation have been affected by features of a musical tone other than its fundamental frequency. Pitch perception is affected by differences in timbre (Geringer et al., 2012; Geringer & Worthy, 1999). Geringer et al. (2012) asked middle and high school string players to evaluate trumpet, violin, and voice performance of a four-section melody with piano accompaniment. Researchers generated three recordings for each instrument. In the first section of each recording the solo line was in-tune with the accompaniment. The following three sections were either in-tune, consistently sharp, or consistently flat by either 10, 20, or 30 cents.

Participants listened to nine recordings and rated the intonation of the latter three sections on a scale of 0 (very in-tune) to 10 (very out-of-tune). The mean intonation ratings indicated that participants rated the violin intonation with means of 3.80 cents and 2.96 cents in the sharp and flat directions respectively as significantly more out-of-tune than the trumpet (*M* (flat) = 2.57, *M* (sharp) = 2.66) or the voice (*M* (flat)= 2.63, *M* (sharp) = 2.16). Results also indicated that participants perceived mistuning in the flat direction with mean ratings of 2.05, 2.51, and 3.70 cents in the 10 cent, 20 cent, and 30 cent conditions respectively to be more out-of-tune than mistuning in the sharp direction with mean ratings of 1.87, 2.38, and 3.99 cents.

The presence or absence of vibrato has also been associated with differences in pitch perception. Geringer et al. (2014) conducted two experiments to examine high school and college students' (*N* = 192) perception of the pitch of tones with and without vibrato. In Experiment 1, participants heard 12 pairs of tones. Half the pairs were performed by a violin and half by a cello. The second pitch of each pair was either the same as the first, 15 cents sharp, or

15 cents flat. Each pair consisted of one pitch with and one without vibrato, and the order of vibrato/non-vibrato alternated between pairs.

Participants rated the second tone of each pair on a seven-point scale from flat (-3) to sharp (+3). Results indicated that participants rated the intonation of pitches with vibrato significantly lower than pitches performed without vibrato. Significant differences were also found according to experience. Collegiate participants' ratings were less affected by the presence or absence of vibrato. No differences were found according to instrument (violin or cello) or gender.

In the second experiment participants heard 12 pitches, each presented with vibrato. The pitches consisted of D and E in a comfortable octave for violin and cello. The two notes were presented as in tune, 15 cents sharp, and 15 cents flat. Using their instruments, participants matched each target pitch twice, once with vibrato and once without vibrato. The researchers calculated the mean cent deviation for the six pitches. Participants' intonation accuracy without vibrato ranged from -.64 –12.30 cents for the 6 pitches. Accuracy with vibrato ranged from -.77–16.61 cents. The differences between the mean accuracy with and without vibrato ranged from 1.5–4.7 cents. Overall the difference between performance accuracy of tones with and without vibrato was statistically significant, but as the average difference was approximately three cents, the authors noted the difference was not musically significant.

Summary of Pitch Perception and Intonation

Pitch discrimination skills and intonation accuracy improve with time and training (Buss et al., 2017; Fancourt et al., 2013; Geringer, 1983; Hopkins, 2014, 2015; Morrison, 2000; Yarbrough et al., 1995; Yarbrough et al., 1997). A comparison of studies reviewed in this chapter shows agreement that adults without musical training attain pitch discrimination thresholds

(PDTs) of 22–28 cents (Fancourt et al., 2013; Buss et al., 2017). Children younger than 5 years have demonstrated PDTs of 242 cents, but these decrease to adult levels between the ages of 8 and 13 (Buss et al., 2017).

Lower PDTs have been associated with increases in musical training and proficiency (Demorest, 2001; Demorest & Clements, 2007; Hopkins, 2014; Yarbrough et al., 1997). Hopkins found PDTs to decrease from 25.9 cents for students with 1 year of musical training to 3.5 cents for university music majors. These results were supported by Hopkins (2015) and Yarbrough et al. (1997) who found that eighth-grade students and students with 5–7 years of experience had PDTs of 5.2 and 6.86 cents respectively. Demorest (2001) and Demorest & Clements (2007) found that more accurate singers had lower average PDTs than less accurate singers.

Intonation accuracy in musical performance also improves with musical training from cent deviations of over 20 cents with one year of experience to 7 cents with 5–7 years of experience (Morrison, 2000; Yarbrough et al., 1995; Yarbrough et al., 1997). Students with 1–4 years of experience show average intonation errors of 22.9-12.34 cents respectively (Yarbrough et al., 1995). Morrison (2000) found similar results. The overall average intonation error for students with 1–4 years of experience was 10.53 cents for single pitch matching and 16.48 cents for accuracy in melodic contexts. Intonation accuracy was better for students with 5–7 years of experience. Hopkins (2015) found eighth-grade students' tuning accuracy was 8.1 cents. Yarbrough et al. (1997) found the average intonation error was 8.95 cents, and Morrison (2000) found students in the same age bracket had an average error of 7.05 cents for single pitch matching and 10.27 cents for intonation in a melodic context. The studies of intonation with collegiate students revealed a wider range of intonation error. This is likely due to performance tasks that were more complex than the performance tasks for middle and high school students.

Performance of a mixolydian scale revealed cent deviations of 14.9–15.9 cents (Geringer, 1978). Tetrachords in upper and lower registers indicated cent deviations of 39.5–61.6 cents for groups of four pitches or an average single cent deviation for single pitches of 9.9–15.4 cents.

PDT and intonation error decrease with time and training; however, the relationship between the two is less consistent across the research described in this chapter. Neither Yarbrough et al. (1995) nor Yarbrough et al. (1997) found a correlation between PDT and intonation error. In contrast, Hopkins (2015) found a significant moderate correlation between PDT and intonation error. Geringer (1983), Demorest (2001), and Demorest and Clements (2007) found correlations between perception and intonation error for some, but not all participant groups. One possible explanation of these collective results is that Yarbrough et al. (1995) and Yarbrough et al. (1997) examined the correlation for students with a much wider range of experience compared to the studies that found correlations. Hopkins (2015) limited his study to 8th grade students. Geringer (1983), Demorest (2001), and Demorest & Clements (2007) grouped students according to performance proficiency and found correlations between PDT and intonation only for students who were more accurate performers.

These results indicate that relationships between perception and production may vary according to the characteristics of participants and the ways in which the relationships are examined (Demorest, 2001). In addition, musical instrument performance involves more skills than pitch perception. It is probable that factors other than perception contribute to accuracy of intonation in musical performance (Hopkins, 2015; Morrison & Fyk, 2002).

Motor Skills and Instrumental Performance

String instrument performance requires mastery of complex, bimanual, asymmetrical motor skills. Intonation requires millimeter precision of left-hand finger spacing and bow control to produce a consistent, characteristic tone. To inform Research Question 3 regarding participants' control of the left-hand finger placement, I present literature related to finger independence in musical performance.

Baader et al. (2005) examined bimanual coordination in violin performance by measuring the independence and timing of left-hand fingering and the coordination between the left-hand fingers and right-hand bow action. Participants were six adult violinists of varying skills from an amateur who had not practiced in several years to a professional violinist. Prior to performing, reflective markers were attached to the left-hand knuckles nearest the fingernail, the mid-point of the bow, and the nut and bridge ends of the fingerboard. A marker was also placed on the pendulum of a metronome. Participants were videotaped playing a 21-note sequence of pitches in first position on the D string. The sequence included all possible ascending and descending melodic intervals that could be created among the open string and the four fingered pitches. Sequences were performed 10 times at each of 4 different tempi between 110 and 180 beats per minute.

Analysis of the video revealed that left-hand finger movements (finger displacement profiles) were consistent regardless of tempo. The researchers suggested this was evidence in support of forward models. The speed of left-hand fingers towards the string varied according to consistent patterns. The researchers labeled the finger associated with the pitch performed the "action-finger." For ascending intervals, the action finger contacted the string in a fast movement. For descending intervals, the action finger of the second, lower pitch moved in an anticipatory motion and was in place prior to the lifting of the finger used to play the first note. The anticipatory motion was slower and irregular compared with more direct motions of finger placement in ascending intervals. An enslaving effect was also observed; fingers next to the action finger typically moved together. Coordination between the bow change and the tone onset in the left hand varied between 30–60ms, and this was not related to the performer's skill.

Finger independence in music performance has been studied more extensively with pianists. Independence of fingers in piano performance decreases with increased speed but improves with practice. Furuya et al. (2014) measured finger independence in piano performance of 10 adult non-pianists. Each participant played a sequence of 12 notes with the left-hand 50 times a day for four days. Half the participants received verbal feedback regarding their rhythmic accuracy, and half received no feedback. Sensors were affixed to participants' left-hand finger joints, hands, and forearms. All performances were video recorded for analysis. The angles of the joints of the fingers were measured for each key stroke, and correlation coefficients between the joint angle of the striking finger with the other three fingers were calculated. Range of motion for left-hand finger joints was significantly higher for the metacarpophalangeal (MCP) joint (knuckle where the finger attaches to the hand) than the proximal-interphalangeal joint (middle knuckle), or the distal interphalangeal joint (knuckle closest to the fingernail). A non-parametric permutation test with correlation coefficients as the dependent variable revealed a significant Group x Practice x Finger Pair interaction. With practice, the MCP joint angles between the little and ring fingers became more individuated, and overall, independence improved most for the finger pairs that were the least independent initially. The authors interpreted the results as support for the role of piano practice in improving finger independence but noted the limitation of the small sample size.

Kincaid et al. (2002) examined finger independence in professional musicians (n = 30) and nonmusicians (n =30) on a bilateral piano performance task. The professional musicians were members of the Omaha Symphony but not professional pianists and included woodwind, guitar, bass, and harp players. Participants were asked to mentally practice a two-part, eight-quarter-note sequence but were not allowed to move their fingers while practicing. After practicing, each participant played the melody. Note and timing accuracy were measured. Musicians had more accurate timing than nonmusicians, but no significant differences were found between groups for note accuracy. Moreover, no differences in either variable were found for handedness, gender, or age. The authors concluded that differences in fine motor skills between musicians and nonmusicians were a result of temporal rather than spatial motor differences.

Summary of Motor Skills and Instrumental Performance

Left-hand finger placement is a determining factor in intonation of string instruments as the placement of fingers changes the length and corresponding frequency of the vibrating string. Baader et al.'s (2005) analysis of left-hand finger movement revealed fingers moved differently according to whether the interval performed was ascending or descending, yet movements were consistent across a wide range of tempi. Finger independence is important to intonation accuracy because the spacing between fingers changes frequently according to the pitch content of the music; however, Baader et al. (2005) also found that fingers do not move independently of each other. When one finger moves, the adjacent fingers move as well though to a lesser degree. Studies of pianists have found similar results and suggest that practice may lead to improved finger independence (Furuya, et al., 2014).

Sensorimotor Integration in Musical Performance

The connection of motor skills to intonation in string performance requires the integration of motor skills and perceptual skills, or sensorimotor integration. Though several types of perceptual feedback may be associated with musical performance, auditory-motor integration has received the most attention in research of musical performance. To study auditory-motor integration, researchers compared performance under normal auditory feedback conditions with performance under masked and altered auditory feedback condition(s) (Chen et al., 2008, 2013; Finney, 1997; Kajihara, et al., 2013; Pfordresher, 2003, 2005). Differences between the accuracy of the performances revealed information regarding the integration of perception and action. In this section I present research conducted with pianists, vocalists, and string instrumentalists.

Auditory-Motor Integration in Piano Performance

According to Brown (2013), "motor production can be examined independently of auditory feedback…and auditory feedback can be removed or altered [in piano performance] without directly manipulating motor production" (p. 3). Electric keyboards allow auditory feedback to be masked or manipulated easily. The onset of tones is very clear allowing for precise measurement of timing in performance. Results from studies of auditory-motor integration in piano performance have been very consistent. Masked auditory feedback has not been associated with increased pitch error (Finney, 1997; Pfordresher, 2003, 2005). This finding supports the existence of internal forward models that allow the performer to plan and execute movements based on predicted outcomes. In contrast, conditions in which feedback is delayed or altered have been associated with increased timing errors and pitch errors. These results also support the existence of internal forward models in that errors increase when the disrupted auditory feedback contradicts the expected auditory feedback (Finney, 1997; Pfordresher 2003, 2005).

Finney (1997) asked 11 collegiate keyboard players to perform two Bach piano excerpts under five different conditions: normal feedback, masked auditory feedback, delayed feedback (250ms), pseudo-randomly altered pitch, and delayed feedback with altered pitch. In the altered pitch conditions, each piano key press was mapped to a different, arbitrarily-chosen pitch such that the resulting performance sounded atonal. Prior to beginning the experiment, participants warmed-up with the excerpt and selected a tempo that would allow accurate performances under normal feedback conditions. During the experiment, each participant performed once under the normal feedback condition and then twice under one of the four test conditions. This was repeated for each of the remaining three conditions. The order of the test conditions was randomized for each participant. The participants then repeated the experiment with the second Bach piano excerpt.

Finney (1997) measured five variables of performance accuracy: pitch errors, time per trial, key stroke velocity, inter-hand coordination, and consistency. Participants made significantly more note errors in the delay condition compared to the normal and altered-pitch conditions. Time per trial did not differ significantly among conditions. Key stroke velocity was significantly higher in the delay and delay + altered-pitch conditions compared to the normal condition. Inter-hand coordination was defined as the difference in milliseconds between keystrokes in the left and right hands and was significantly different only for the delay condition. No other significant pairwise comparisons were present. Consistency was defined as the variance of note duration and variance of the lengths of time between the onsets of notes of equal duration. No significant differences were found among the conditions. Overall, no significant differences were found for any of the five variables between the normal feedback condition and the masked feedback condition.

In a second experiment with nine keyboardists, Finney (1997) examined two additional types of pitch alterations: (a) small: all pitches were accurate except that alternate performances of E and A sounded one semitone above E or below A; and (b) melodic: altered pitches fit within the musical context of the excerpt. No significant differences were found in pitch accuracy between the normal and altered pitch conditions. Consistent with Experiment 1, no significant differences were found between the normal feedback condition and the masked feedback condition for any of the measured variables.

Pfordresher (2005) conducted a series of six experiments to examine how alterations in the pitch of auditory feedback affected error rates and timing consistency in trained and untrained pianists. In Experiment 1, pianists (*N* =20) performed two, 12-note melodies under normal, masked, random, and lag-1 conditions. In the random condition, a pitch selected randomly from a two-octave range around the range of the melody was substituted for each keypress. In the lag-1 condition, participants heard the pitch associated with the previous keypress. Each participant performed both melodies twice under each feedback condition. Error rates were measured for the experimental conditions by the number of incorrect pitch events relative to the number of correct pitch events in the normal feedback condition. Timing accuracy was measured by the consistency of time between keypresses, also called inter-onset intervals (IOI), and the coefficient of variation (CV) which was the ratio of the standard deviation of the IOI and the mean IOI within a trial.

Experiment 1 results indicated significant differences in error rates according to feedback condition. Post hoc analyses indicated error rate was highest in the lag-1 condition, the only condition with error rates significantly different than the normal feedback condition. A significant difference in CVs was found among the feedback conditions, but post hoc analysis revealed no significant pairwise comparisons. The authors noted that altered and random feedback conditions appeared to influence error rates but not timing rates.

In Experiment 2, undergraduate students (*N* = 26) with an average of 1.9 years of piano experience performed two, eight-note melodies three times under the four feedback conditions of Experiment 1. Results were similar to those found with experienced pianists. Significant differences in error rates were found for feedback condition, and the lag-1 shift was significantly different than the normal feedback condition. No other pairwise comparisons were significant. CV also differed significantly according to condition, and the lag-1 to normal condition was the only significant pairwise comparison. Comparison of findings of the two experiments using a 3 x 4 mixed factorial revealed no significant interaction effects for Group x Feedback Condition. Pfordresher interpreted this to mean that the influence of delayed feedback on error rates was not related to musical experience.

Experiment 3 included additional altered feedback conditions. Adult pianists (*N* = 14) performed two melodies under five feedback conditions: normal, lag-1, random, random-same, and random-different. In the random-same condition, the pitches heard were a random order of the pitches of the melody. In the random-different condition, each pitch of the random order was altered by one semitone either sharp or flat of the original pitch. As in the previous two experiments, the lag-1 condition had the highest error rate. The error rates of both the lag-1 and random-same conditions were significantly higher than the other conditions. Experiment 4 was a replication of Experiment 3 with non-pianists, and the melodies learned were the same from Experiment 2. Results were consistent with the previous three experiments.

Experiment 5 addressed the role of auditory feedback in learning new melodies. Participants (*N* = 25) with no previous piano experience were asked to learn melodies without auditory feedback and then perform them under the feedback conditions of Experiments 3 and 4. Results were similar to the previous experiments despite the absence of auditory feedback during the learning phases. Performance errors were greater in the lag-1 condition than the normal feedback condition. Because the non-pianists learned the melodies without auditory feedback, they could not have formed auditory-motor associations during the learning process. In spite of this, the results were similar to previous experiments in which non-pianists learned with auditory feedback. This led Pfordresher to suggest that the disruption of performance by altered feedback was not due to associations developed during the learning phases.

Lastly, in Experiment 6, non-piano participants completed the same tasks from Experiment 5, but they were told to focus on their finger movements during practice. After each performance trial, participants were asked to rate the "similarity of the perceived melody to the kind of melody you might expect to hear when performing the melody on a normal piano" (Pfordresher, 2005, p. 1341). Significant differences in average ratings were present according to feedback condition, with the normal to lag-1 pairing being the only significant pairwise comparison.

Collectively and consistent with previous results, masked auditory feedback did not influence error rates of the performances of pianists or non-pianists. However, when pitch content or timing of the auditory feedback was altered and the pitch heard was similar to the anticipated pitch, error rates were significantly higher. Pfordresher (2005) explained the difference between delayed conditions and random or silent conditions:

> Auditory feedback in these circumstances adds activation for an event that is supposed to be less active than the event associated with the action that was just produced, resulting in an interference between the activations of the current event and the event that auditory feedback matches. In the case of random feedback or the random-different feedback condition, perceived events rarely (if ever) match events intended for other serial

> positions. In the case of silence, a performer can still plan the sequence on the basis of activations of events planned for production (p. 1342).

Auditory-Motor Integration in Vocal Performance

Pitch accuracy in piano performance is not disrupted by the absence of auditory feedback (Finney, 1997; Pfordresher 2003, 2005). However, intonation is not a factor in piano performance because performers have no control over the frequencies of the pitches that they perform beyond selecting the correct keys to play. In contrast, intonation in vocal performance presents a challenge similar to string performance in that the performer may produce any pitch along a continuous range of frequencies. Research indicates that vocalists may rely upon auditory feedback for intonation more than pianists and that poor-pitch singing is more likely the result of sensorimotor mismapping than deficits in pitch perception or motor skills (Beck et al., 2017; He & Zhang, 2017; Pfordresher & Brown, 2007).

Pfordresher and Brown (2007) conducted two experiments to test four potential explanations of poor-pitch singing: (a) perceptual deficits arising from poor pitch discrimination; (b) motor deficits due to lack of motor control necessary to produce pitches; (c) imitative deficits due to sensorimotor mismapping between perception and production of a pitch; and (d) memory deficits from the inability to remember a pitch long enough to imitate it. In Experiment 1, participants were university undergraduates (*N* = 79) with no formal music training. The first 40 participants were selected at random from a pool of students. The remaining 39 participants were selected from the same pool based on their self-identification as poor-pitch singers. The first 40 participants completed a perception task and all participants completed a performance task. The perception task consisted of 56 pairs of pitches. Participants responded whether the second pitch was the same or different than the first pitch (C5, 524 Hz). The second pitches were higher in

25% of pairs, lower in 25% of pairs and the same in 50% of the pairs. Differences between pitches ranged from 25–100 cents.

In the performance task, participants heard recordings of four-note sequences and were asked to sing them back under three feedback conditions: normal, masked (no auditory feedback), or augmented. In the augmented condition, participants sang along with an accurate model. Each four-note sequence consisted of either the same pitch, two unique pitches, or four unique pitches. Two types of performance errors were measured: note error and interval error. Note error was the difference between the goal pitch and the sung pitch expressed in cents. Interval error reflected the accuracy of the distance between successive pitches. Each reference interval was equal to 100 cents multiplied by the number of semitones that comprised the interval. Interval error was determined by recording the distance between successive pitches expressed in cents and subtracting the number of cents for the target interval.

Singers whose average note error was greater than 100 cents (*n* = 10) were labeled as poor-pitch singers. The authors did not report specific mean note errors or interval errors of the sample or groups within the sample. Poor-pitch singers also showed greater variance in note errors, and interval error results indicated they tended to compress intervals. Good singers showed a significantly smaller difference between note error and interval error. No significant difference was found in pitch discrimination accuracy between good singers and poor-pitch singers, and no correlations were found between note error and pitch discrimination or between interval error and pitch discrimination.

Pfordresher and Brown (2007) used an ANOVA to examine differences in note error according to group (good/poor singers), sequence complexity (1, 2, or 4 unique pitches) and feedback condition (normal, masked, or augmented). Results indicated significant 2-way interactions for Group x Complexity and Group x Feedback Condition as well as a significant 3-way interaction for Group x Complexity x Feedback Condition. Good singers' accuracy decreased with complexity, but poor-pitch singers' accuracy did not significantly change. Under the augmented feedback condition, accuracy increased for good singers but decreased for poor-pitch singers, indicating that singing with an accurate model led to improved performance only for good singers. The researchers conducted the same analysis with interval error as the dependent variable. Results revealed a significant Group x Complexity interaction. Good singers' note error increased significantly more than that of poor-pitch singers as complexity of the singing task increased.

Though the researchers found no correlation between note error and pitch discrimination, they chose to test for differences in note error according to performance on the pitch discrimination test. Participants were designated as good perceivers if their pitch discrimination threshold was less than 50 cents. Participants whose thresholds were greater than 50 cents were designated as poor perceivers (*n* = 8). An ANOVA revealed no group main effects for note error. A second ANOVA revealed a significant Group x Feedback Condition interaction. Poor perceivers improved more with augmented feedback than did good perceivers.

Pfordresher and Brown (2007) designed the singing tasks of Experiment 2 to match participants' vocal ranges more closely. Participants (*N* =45) consisted of musically trained and untrained undergraduate students who completed a perception task and a singing task. The perception task presented pairs of notes and asked participants to determine if the second note was higher than the first. Prior to beginning the performance task, each participant sang a comfortable pitch. The researchers generated six, four-note trials based around the frequency of the comfort note. The first and last trials consisted of only the comfort note. The second and third trials consisted of the comfort note followed by a scale step above, scale step below, and return to the comfort note. The fourth and fifth trials were like the second and third, but the distance from the comfort note was four scale steps.

As in Experiment 1, participants were designated as good or poor-pitch singers according to their mean note error on the singing task. The mean note error for poor-pitch singers (*n* = 7) was 229 cents. Good singers without musical training (*n* = 6) had a mean note error of less than 100 cents. Results indicated that poor-pitch singers erred in the direction of their comfort pitches by erring flat when singing notes above the comfort pitch and erring sharp when singing notes below the comfort pitch. Comparison of the perception scores between good and poor-pitch singers revealed no significant differences. Examination of motor skills occurred through a vocal sweep warm-up exercise with a subset of eight participants. The range of the pitches in the study sequences fit within the range of participants' vocal sweeps. This indicated that participants possessed the necessary motor skills to produce each of the pitches in the trials.

Overall, Pfordresher and Brown (2007) concluded that neither pitch discrimination threshold nor motor skill deficits could adequately explain poor-pitch singing. Instead, they proposed that poor-pitch singing reflected sensorimotor mismapping, an assertion strengthened by the inability of poor-pitch singers to improve their performance when singing with an accurate model, regardless of how accurately they could perceive the pitch. Only singers who had accurate associations between vocal motor skills and auditory perception could successfully imitate the accurate model. Pfordresher and Brown suggested that these deficits reflected "feedforward, rather than feedback links between perception and action" (p.113).

He and Zhang (2017) examined the nature of sensorimotor mismapping in poor-pitch singers. They suggested that poor-pitch singing may reflect either erroneous sensorimotor mapping or a complete lack of sensorimotor mapping. In their study, they tested the reliability and validity of operational definitions for erroneous-mapping and no-mapping forms of sensorimotor mismapping. They defined erroneous-mapping as singing performance that is precise but inaccurate. In contrast, they defined no-mapping as singing performance that is imprecise.

Adult poor-pitch singers (*N* = 32) completed a pitch discrimination task, a vocal sweep task, and a singing task. The pitch discrimination task consisted of two sections. The first section presented 75 pairs of pitches and asked participants to identify whether the pitches were the same or different. The second section presented an additional 75 pairs and asked participants to indicate if the second pitch was higher than the first. He and Zhang used a maximum likelihood procedure to determine pitch discrimination thresholds but did not provide additional information regarding the nature of the test or how subsequent results were determined. All participants demonstrated pitch discrimination thresholds under 50 cents. The authors did not include any participants whose pitch discrimination thresholds were greater than 50 cents and did not report how many participants were excluded from the study based on this measure.

Participants also completed a vocal sweep task to ensure that they had the motor control necessary to produce the pitches required in the trials. Participants were asked to sing pitches in small increments from the lowest to highest comfortable pitches in their vocal ranges. Analysis indicated that all participants could produce the pitches that comprised the singing task.

Each participant completed three singing tasks: Pure Tone Imitation (PTI), Same Articulatory Self-Imitation (SASI), and Different Articulatory Self-Imitation (DASI). The purpose of the different imitation tasks was to determine whether stimulus timbre influenced singing accuracy. In the PTI, participants heard a pure tone and imitated the tone using the syllable /ba/ in 12 blocks of 12 pitches. Each block contained each pitch in a one-octave chromatic scale in a pseudorandom order. For the second and third tasks, the researchers digitally adjusted each participant's recordings from the first task to the precise frequencies of the initial target pitches. In the SASI, participants heard themselves sing the target pitches on /ba/ and imitated using the same syllable. In the DASI, participants heard themselves sing the target pitches on /ba/ and imitated with the syllable /di/.

Results indicated an average pitch discrimination threshold under 30 cents. Acceptable performances on the vocal sweep task indicated normal motor skills. Consequently, the authors concluded that neither pitch discrimination nor motor skills alone were the cause of poor-pitch singing. Participants were grouped as erroneous-mapping or no-mapping based on the PTI performance. He and Zhang operationally defined a performance as accurate if the absolute value of the mean signed pitch deviation was less than 50 cents and precise if the standard deviation of the signed pitch deviation was less than 100 cents. Split-halves analysis of each task indicated moderate reliability.

Two criteria were examined for criterion validity of the operational definitions: (a) pitch-matching accuracy would be higher for singers with erroneous-mapping than no-mapping; and (b) singers with no-mapping would be more precise on the SASI than the DASI. A mixed linear model revealed accuracy to be significantly higher for the erroneous-mapping compared to no-mapping singers on the PTI task. Singers were most accurate and precise on the SASI followed by the DASI, and least on the PTI. This supported validity under the first criterion. Second, researchers found a significant correlation between precision and self-advantage scores (calculated from differences between precision on the two self-imitation tasks) for the no-mapping group but not for the erroneous- or accurate-mapping groups. Overall, the researchers concluded that their definitions of sensorimotor mismapping were reliable and valid approaches to explaining differences among poor-pitch singers.

Beck et al. (2017) compared singing accuracy of children and adults with and without auditory feedback. Participants (*N* = 42) were placed into three groups of equal size: 5-8-year-olds, 9-12-year-olds, and college students. Participants sang the "Alphabet Song" under normal and masked auditory feedback conditions. To mask auditory feedback, participants wore Bose noise-canceling headphones with a multi-talker babble mask at a level of 72–81 decibels. This was found to be more effective in masking feedback than white noise. Three measures of the participants' performances were analyzed: (a) mean interval error, (b) standard deviation of signed interval error, and (c) standard deviation of the tonic pitches. Accuracy of individual pitches could not be determined because participants selected their own starting pitches.

Results of a two-way repeated measures ANOVA indicated that feedback condition and age each had significant main effects on mean interval error. Participants were, on average, 8 cents more accurate in the normal feedback condition compared to the masked feedback condition, and adults were 21 cents more accurate than the 5-8-year-old participants. No significant differences were found for the 9-12-year-olds and other groups. Beck et al. (2017) defined precision as the standard deviation of the signed interval error. An ANCOVA with choral experience as the covariate was used to examine main effects of feedback condition and age on precision. Results indicated that participants were 12 cents more precise in the normal compared to the masked feedback condition. There was a significant interaction of Feedback x Age, but the differences in means were less than 3 cents. The same ANCOVA was run for standard deviation of the tonic pitches to assess participants' tonal stability. Adults were significantly more stable than 5-8-year-olds by an average of 8 cents. Tonal stability was significantly less for the 9-12-year-olds when feedback was masked, but this effect was not observed for the other age groups. Overall, these results indicated that vocalists may be more dependent upon auditory feedback then pianists.

Auditory-Motor Integration in String Performance

Intonation on a string instrument presents challenges to the performer similar to those faced by vocalists. In both cases, performers must produce specific pitches from among a continuous range of frequencies. Very few studies have addressed auditory-motor integration with string players (Chen et al., 2008, 2013; Kajihara et al., 2013). This may be due in part to the challenges of masking or altering auditory feedback with instruments other than the piano (Chen et al., 2008; Pfordresher, 2019). Chen et al. (2008, 2013) created a modified cello to overcome this challenge by adding a thin copper strip on the fingerboard under the A-string and applying a low-level current to the string. Pressing the string to the copper strip on the fingerboard created a complete circuit. The voltage of the circuit was linearly related to the length of the vibrating string. By measuring the voltage of each pitch, the researchers could measure the distance between the nut and the finger placement and then calculate the frequency of the corresponding pitch. This allowed researchers to mask auditory feedback by asking participants to perform the exercises without the bow and using only the left hand.

In their 2008 study, Chen et al. asked six collegiate cellists and two professional cellists to shift on the A string from B–D, B–E, and B–A using the first finger without vibrato. For each pair of notes, participants shifted back and forth at one note per second for 1–2 minutes. Participants completed this exercise with and without using the bow. The order of the note pair and the order of the with- and without-the-bow conditions were randomized. The researchers measured accuracy (mean finger position) and variability (standard deviation) of each pitch for each trial. For each pitch (B, D, E, and A), researchers determined the accurate position of the note in centimeters on the A string and defined a pitch accuracy window of 1/8th-step (+/- 6.25 cents) around the target pitch. The researchers reasoned that participants would be unable to discriminate between pitches within the window and the correct pitch. The researchers did not specify how they selected the +/- 6.25 cent window. Findings from studies of pitch discrimination have suggested that professional and collegiate cellists may be able to discriminate smaller differences between pitches (Hopkins, 2014).

Findings from the Chen et al. (2008) study revealed that pitch accuracy decreased and variability increased when participants shifted without auditory feedback (i.e. without using the bow). Results also indicated that participants made more small adjustments to pitch when shifting with auditory feedback than without. Comparison of average pitch positions to the pitch window revealed that when shifting with auditory feedback, only one participant had average pitches that fell outside the window. When shifting without auditory feedback, all the cellists had at least two of four pitches fall outside the pitch window. The authors noted these results were inconsistent with findings of pitch accuracy studies with pianists and suggested that cellists rely upon auditory feedback for shifting accuracy.

In 2013, Chen et al. again examined cellists' shifting motions with and without auditory feedback. In this study they analyzed the accuracy and variability of those motions and the extent to which the accuracy of the pitch after a shift was dependent upon the accuracy of the preceding pitch. Participants were seven collegiate and two professional cellists. Using the same altered cello and similar procedures to the 2008 study, participants shifted between B and D and between B and A on the A-string using the first finger at a rate of one note per second for two minutes. When participants shifted with auditory feedback, analysis of the errors indicated the note accuracy was independent of the preceding note. In contrast, analysis of errors made without auditory feedback indicated that "contact locations tended to drift and had a random quality indicating that without the bow subjects were uncertain of the target location in relation to spatial location of their fingertips" (p. 1). The authors concluded that proprioception and tactile feedback play a secondary role to auditory feedback in the pitch control of cellists.

Chen et al. (2008, 2013) compared performance with the presence and absence of auditory feedback. Kajihara et al. (2013) examined the effect of feedback congruency with reaction time and accuracy of adult violinists and nonmusicians. They altered a violin by removing the strings and adding switches in the place of the A-string pitches B, C, C-sharp, and D. Participants placed fingers 1–4 on the switches. Participants wore headphones and were instructed to press the switches according to the numbers they heard through the headphones. Auditory feedback was either congruent, with the pitches associated to the finger numbers each in ascending order (B–finger 1, C–finger 2, etc.) or incongruent, with pitches assigned to finger numbers in reverse order (D–finger 1, C#–finger 2, etc.). Reaction time and errors were recorded for each trial. Results indicated that though the violinists had shorter response times than the nonmusicians overall, violinists' response times were significantly longer for incongruent trials than congruent trials, indicating they were more distracted by the mismatch between pitch direction and spatial mapping. There was no significant difference in errors between the groups or trials.

Kajihara et al. (2013) repeated their experiment with three groups of 13-year-old children who either had no musical training, notation-based training, or aural-based training (Suzuki method). Both groups with training had an average of over nine years of violin experience. The Suzuki group had significantly more errors and slower response times than the other two groups for incongruent trials. The authors indicated this effect was moderately significant ($p = .08$) and interpreted this result as evidence that aural-based music training leads to strong associations between pitch contour and spatial mapping. This was the only study with string players that involved an altered-pitch feedback condition. Like piano studies, the altered feedback led to longer response times and more errors for some groups.

Summary of Auditory-Motor Integration

Musical performance involves complex sensorimotor skills which are associations between perception and actions that form during learning (Maes et al., 2014; Pfordresher, 2019). Results from sensorimotor research in musical performance indicate that once sensorimotor associations are formed, the musician no longer relies upon auditory feedback loops for performance (Finney, 1997; He & Zhang, 2017; Pfordresher, 2005; 2019; Pfordresher & Brown, 2007). These results add support for the existence of forward models in which the performer can predict and execute the motor skills necessary to create a desired sound (Maes et al., 2014; Wolpert et al., 1995). Musicians' use of auditory feedback to guide pitch accuracy and intonation is related to the instrument performed. Vocalists and cellists appear to need auditory feedback for accurate intonation more than pianists need auditory feedback for pitch accuracy (Beck et al., 2017; Chen et al., 2008; 2013; Finney, 1997; Pfordresher 2005; Pfordresher & Brown, 2007). Temporal or pitch alterations of auditory feedback cause greater disruption to music performance than the absence of auditory feedback which suggests these alterations conflict with the performer's internal forward models and consequently interfere with performance (Finney, 1997; Kajihara et al., 2013; Pfordresher, 2005). Finally, intonation error may be the result of inaccurate associations (mappings) of perception and action rather than deficiencies in perceptual or motor skills alone (He & Zhang, 2017; Pfordresher & Brown, 2007).

Conclusion

The purpose of the current study was to examine the extent to which pitch discrimination and sensorimotor skills explain the intonation of middle school violinists. In this chapter, I reviewed research in the areas of pitch perception and intonation, motor skills, and sensorimotor integration to inform the current study. The many approaches to measuring and analyzing pitch perception and intonation rendered interpretation of this body of work challenging. Pitch perception has been measured through same/different, adaptive difficulty tasks (Buss et al., 2013; Fancourt et al., 2013; Pfordresher & Brown, 2007), through MOA tasks (Demorest, 2001; Demorest & Clements, 2007; Hopkins, 2014; 2015; Yarbrough et al., 1995; Yarbrough et al., 1997), and through rating scales (Geringer et al., 2012; Geringer et al., 2014; Smith, 1995). Results have been reported in cent deviations (Demorest, 2001; Fancourt et al., 2013; Hopkins, 2014; 2015; Yarbrough et al., 1997), number of correct responses with varying criteria for determining correctness (Demorest & Clements, 2007; Geringer, 1983; He & Zhang, 2017) and means of rating scale responses (Geringer et al., 2012; Geringer et al., 2014).

Similar challenges were present in the measurement and analysis of intonation. The most common task reported in the research was single-pitch matching (Geringer et al., 2014; He & Zhang, 2017; Hopkins, 2015; Pfordresher & Brown, 2007; Yarbrough et al., 1995; Yarbrough et al., 1997). Other studies have examined accuracy of pitches performed in a melodic sequence or scale (Geringer, 1978; Kantorski, 1986; Morrison, 2000; Sogin, 1989). Many of these studies also included some form of accompaniment (Geringer, 1978; Kantorski, 1986) or asked participants to perform with an accurate model (He & Zhang, 2017; Morrison, 2000).

Taken together, results from this body of work consistently indicate that pitch discrimination threshold and intonation improve with age and musical training. However, analyses of the relationship between pitch discrimination threshold and intonation have yielded inconsistent results indicating either no correlation (Yarbrough, et al., 1995; Yarbrough et al., 1997), a positive correlation (Hopkins, 2015), or correlations for some groups but not others (Demorest, 2001; Demorest & Clements, 2007; Geringer, 1983). One possible explanation of these collective results is that Yarbrough et al. (1995) and Yarbrough et al. (1997) examined the correlation for students with a much wider range of experience than the studies that found correlations. Hopkins (2015) limited his study to eighth-grade students. Geringer (1983), Demorest (2001), and Demorest & Clements (2007) grouped students according to performance proficiency and found correlations between pitch discrimination threshold and intonation only for students who were more accurate performers. The current study contributes to this body of work by examining the correlation of pitch discrimination threshold and intonation accuracy of middle school violinists' performances of scales.

Playing a string instrument demands complex motor skills including precise and independent control of left-hand finger placement. Baader et al. (2005) observed that left-hand finger movements differed according to whether an interval was ascending or descending. They also observed a finger enslavement effect in which for every finger motion, adjacent fingers also moved. Furuya et al. (2014) examined this effect in pianists and found that it could be reduced through practice. Drawing on these studies and those of vocal intonation, this study will contribute to understanding the spatial demands of left-hand finger placement by examining the accuracy of intervals and precision of individual pitches in string performance (Beck et al., 2017; He & Zhang, 2017). Analysis of interval accuracy may provide a more nuanced understanding of finger spacing in string performance. On a string instrument, it is possible for fingers to be spaced correctly even though individual pitches may be inaccurate, particularly if the hand is displaced along the finger board. Similarly, examining the variability of a string player's intonation accuracy would reflect the performer's overall consistency.

Lastly, scholars have proposed that a sensorimotor approach to explaining intonation may be more appropriate than either perception or motor explanations alone (He & Zhang, 2017; Pfordresher & Brown, 2007). This perspective may help to explain the inconsistent findings of music education studies of perception and intonation. Consistent with the sensorimotor studies reviewed in this chapter, the current study involves a comparison of performance under normal and masked auditory feedback conditions. Chen et al. (2008, 2013) found that string performers may be more influenced by the absence of auditory feedback than pianists. By creating a model that includes both pitch discrimination threshold and intonation accuracy without auditory feedback, it may be possible to examine how perception and action contribute independently to intonation.

CHAPTER III

Method

The purpose of this study was to examine the extent to which pitch discrimination and sensorimotor skills explain the intonation of middle school violinists. In this chapter I present the methodology for the current study including participants, data sources, data collection procedures, and statistical analyses. As stated in Chapter 1, the research questions are:

1. What are the correlations among pitch discrimination threshold and the following performance variables with and without auditory feedback: intonation error, intonation precision, interval error, and interval precision?
2. To what extent do pitch discrimination threshold and intonation error with masked auditory feedback explain the intonation error with normal auditory feedback of middle school string players when controlling for student characteristics of grade, years of experience, private lessons, handedness, finger placement markers, weekly practice time, and school?
3. Do intonation error or interval error differ according to which left-hand finger(s) were used to create the pitch(es)?

Participants

I collected responses from 202 sixth, seventh, and eighth grade violinists. The students were members of their respective orchestra programs at two middle schools in southeast Michigan and four middle schools in central Oklahoma. The responses from 23 participants contained missing data due to one or more of the following: (a) incomplete responses to the study measures, (b) performance with tone quality too poor for analysis, and (c) recording equipment malfunction. Listwise deletion of these 23 participants' responses resulted in a final sample of 179 participants. A power analysis using G*Power 3.1.9.4 (Faul et al., 2009) indicated an ideal sample size of 200 participants. The number of observations lost by listwise deletion represented 12% of the initial sample. Because the sample size was large ($N > 100$) (Acock, 2016), I chose to accept the slight reduction in power over the use of multiple imputation to replace missing values.

Participant Demographics

Participants' (N =179) ages ranged from 11–15 years with a mean age of 12.2 years (SD = .95). Two-thirds of the participants identified as female (n = 119, 66.5%) and one-third identified as male (n = 60, 33.5%). No participants indicated other gender identities. Table 1 shows participants' reported race/ethnicities. The representation of gender and race/ethnicity of the participants was similar to that reported by Elpus and Abril (2011) in their national study of the demographics of high school musical ensembles. Representation by race/ethnicity indicated similar percentages for all categories except Asian and Black/African American. In comparison to the national study, the current sample consisted of a greater percentage of participants reporting a race/ethnicity of Asian and a lower percentage of participants reporting a race/ethnicity of Black/African American.

Table 1

Reported Race/Ethnicity

Race/Ethnicity	*n*	%
American Indian or Alaska Native	3	1.7
Asian	22	12.2
Black or African American	5	2.8
Hispanic or Latino	19	10.6
Native Hawaiian or Pacific Islander	1	0.6
White	121	67.2
Multiple Categories	9	5.0

Participants were enrolled in sixth (*n* = 81, 45.3%), seventh (*n* = 59, 33.0%), and eighth (*n* = 39, 21.8%) grades in their respective schools. Table 2 shows the number of participants enrolled at each school.

Table 2

Participants' Middle Schools

School	State	*n*	%
A	MI	20	11.2
B	MI	35	19.6
C	OK	30	16.8
D	OK	22	12.3
E	OK	31	17.3
F	OK	41	22.9

Participant Musical Backgrounds

The school districts that participated in this study offer class string instruction beginning in the fifth grade, and most participants began instruction during that year. Table 3 shows the grade in which participants began playing the violin.

Table 3

School Grade During the First Year of Violin Instruction

Grade	*n*	%
PreK–K	7	3.9
1	4	2.2
2	6	3.6
3	5	2.8
4	7	3.9
5	142	79.3
6	6	3.4
7	2	1.1

Based on the participants' current grades in school and the grades in which they began instruction, I calculated the number of years of experience for each participant ($M = 3.15$, $SD = 1.47$). Table 4 shows the number of participants according to years of instruction. Participants also indicated if, and for how many years, they took private lessons. Slightly more than 25% of participants studied privately, and those who had studied privately indicated between one and nine years of private lessons (see Table 5). This is consistent with Smith et al.'s (2018) national survey of string orchestra programs which reported that an average of 18% of school orchestra participants took private lessons.

Table 4

Years of Violin Instruction

Years	*n*	%
1	5	2.8
2	64	35.8
3	57	31.8
4	35	19.6
5	4	2.2
6	6	3.4
7	1	0.6
8	6	3.4
9	1	0.6

Table 5

Years of Private Instruction

Years	*n*	%
0	131	73.3
1	20	11.1
2	6	3.3
3	3	1.7
4	6	3.3
5	1	0.6
6	5	2.8
7	1	0.6
8	5	2.8
9	1	0.6

Participants reported an average weekly practice time of 107.8 minutes (*SD* = 109.9) with a range of 0–736 minutes per week. Due to the large range and variability, I recoded practice time as a categorical variable according to the number of hours practiced per week. Participants practiced < 1 hour/week (*n* =69, 38.9%), 1–2 hours/week (*n* = 67, 37.2%) and > 2 hours/week (*n* = 43, 23.9%).

Finger placement markers (FPMs) are often used as a teaching tool for young string students. FPMs are tapes, stickers, or other forms of markings on the fingerboard that provide a visual and tactile reference for finger placement. Overall, fewer participants used FPMs on their personal instruments (*n* = 75, 41.9%) compared to those who did not use FPMs (*n* = 104, 58.1%). FPMs are typically removed from the instrument once the student no longer relies upon the FPMs to guide finger placement. As expected, number of participants who used FPMs decreased as grade increased (see Table 6).

Table 6

Use of Finger Placement Markers by Grade Level

Grade	Yes	No
6	45	36
7	20	39
8	10	29

School Characteristics

Participants attended six middle schools in three school districts. The two Michigan middle schools (Schools A and B) were the only middle schools in their respective districts. The four Oklahoma middle schools (Schools C, D, E, and F) were part of the same district and were situated in a larger, more diverse community than the two Michigan middle schools. Tables 7 and 8 show school demographics of total enrollment, free and reduced lunch eligibility, and percent enrollment by race/ethnicity.

Table 7

School Characteristics: Total Enrollment and Percent Free and Reduced Lunch

School	State	Total School Enrollment	Percent Free and Reduced Lunch Eligibility
A	MI	565	15.0
B	MI	1216	12.7
C	OK	785	39.4
D	OK	760	28.3
E	OK	729	27.3
F	OK	1158	15.6

Note. Data are from the 2018-2019 school year (National Center for Education Statistics, 2020).

Table 8

School Characteristics: Percent Enrollment by Race/Ethnicity

School	American Indian/ Alaska Native	Asian	Black or African American	Hispanic or Latinx	Native Hawaiian or Pacific Islander	White	Two or More Races
	%	%	%	%	%	%	%
A	0.0	1.1	0.5	4.6	0.0	89.2	8.3
B	0.7	4.5	1.5	1.8	0.0	87.7	2.1
C	5.0	3.3	12.0	11.7	0.4	50.6	17.3
D	5.5	2.0	5.3	11.3	0.3	63.0	12.6
E	3.7	1.6	5.5	21.3	0.1	53.2	14.7
F	3.0	3.8	3.8	14.5	0.1	62.0	12.9

Note. Data are from the 2018-2019 school year (National Center for Education Statistics, 2020).

Despite differences in the location and demographic characteristics of the middle schools, the orchestra programs were quite similar. String instruction in each district begins at the elementary schools in fifth grade. According to Smith et al., (2018), 28% of orchestra programs in the United States begin instruction in fifth grade. With the exception of School B, the orchestra schedules consisted of daily classes with a range of 49–60 minutes of instruction per day. At School B, orchestra classes met on alternate days and were 71 minutes in length.

Teacher Characteristics

The participants' orchestra teachers followed similar curricula and used similar pedagogical approaches. Classes began with warm-up and technique exercises followed by rehearsal of repertoire. The difficulty level of the repertoire increased from sixth to eighth grade and was similar among the six schools.

Most of the participants' orchestra teachers had over 15 years of teaching experience and held advanced degrees. Three teachers were male, and three teachers were female. Table 9 shows the teaching experience and highest degree attained for each teacher whose students participated in this study. Teachers with advanced degrees outside of music held bachelor's degrees in music education.

Table 9

Teachers' Years of Experience and Highest Degree Earned

School	Years of Teaching Experience	Highest Degree Attained
A	22	Master of Music Performance
B	20	Master of Arts Management
C	16	Master of Education Administration
D	3	Doctor of Musical Arts (cello performance)
E	35	Bachelor of Music Education
F	5	Bachelor of Music Education

Description of Tasks and Variables

Participants in this study completed three tasks: (a) a pitch discrimination task, (b) a performance task, and (c) a musical background questionnaire.

Pitch Discrimination Task

The pitch discrimination task consisted of Part 1 of the Violin Tuning Perception Test (VTPT) (Hopkins, 2015). The purpose of the VTPT was to measure perception of unison and perfect fifth intervals formed from the open strings of the violin, (E5, A4, D4, G3). Part 1 of the

VTPT consisted of 16 items, four for each of the four violin open strings. The 16 items were presented as *very sharp, sharp, flat,* or *very flat* in relation to the reference pitch. The amount of mistuning was randomized but limited to no more than 50 cents in either the sharp or flat direction. Part 2 consisted of 12 perfect-fifth items, four for each of the adjacent string pairs on the violin. As in Part 1, the second pitch of each interval was presented as *very sharp, sharp, flat,* or *very flat*.

For each item on the VTPT, participants heard a reference tone and then heard a second, mistuned tone. Using a method-of-adjustment (MOA) approach, participants adjusted a slider on the computer screen to match the second tone to the first tone. Pitch discrimination thresholds were equal to the cent deviation between the target tone and the adjusted tone. Overall reliability was strong (α = .84).

Pitch Discrimination Variable.

The performance tasks in the current study did not involve the performance of harmonic intervals; therefore, participants completed only Part 1 of the VTPT. I used the participants' responses to Part 1 of the VTPT to determine their pitch discrimination thresholds (PDT). PDT was defined as the cent deviation between participants' VTPT responses and the respective reference pitches. Positive values indicated errors in the sharp direction. Negative values indicated errors in the flat direction. I used the absolute value of the cent deviations when calculating mean PDT scores for analysis. By using the absolute value, the mean scores more accurately reflect the magnitude of the cent deviations.

Performance Task

The performance task consisted of two exercises: (a) a 2-octave G-major scale and (b) a 1-octave D-major scale in melodic thirds. The scale and the scale in thirds consist of four intervals: (a) minor seconds, (b) major seconds, (c) minor thirds, and (d) major thirds. These are common exercises for string players and are typically memorized, thereby avoiding the need for students to read notation while performing. Prior to beginning the study, I consulted with the participants' orchestra teachers. They agreed that the performance material was appropriate and that they would teach the material in their classrooms. To facilitate teachers' efforts and to avoid variations in fingering, rhythm, and articulation of participant performances, I sent each teacher the sheet music notation of the exercises prior to visiting the schools (see Appendix B).

Differences among students' individual instruments posed a threat to validity. Among student-level instruments, the quality of instruments and the quality of strings can vary considerably, which could affect intonation. Another difference related to student instruments is the presence or absence of finger placement markers (FPMs). As previously noted, FPMs are tapes or stickers placed on the fingerboard to provide a visual and tactile guide for young players as they learn where to place their fingers. However, the use of visual and tactile feedback by some students and not others imposed threats to validity. Bergonzi (1997) found that FPMs were associated with significantly more accurate intonation of beginning string players. Consequently, it was necessary for all participants to play without FPMs.

To address these potential threats to validity, I provided instruments of the appropriate sizes for participants to complete the performance tasks. These instruments were outfitted with a Fishman V200 pick-up to record the performances. All instruments had a fresh set of strings. It is possible that participants who were used to playing with FPMs would struggle when asked to play without them. The study procedures allowed a warm-up period for each participant to play both exercises on the instrument before I audio-recorded the exercises. The musical background questionnaire included a question of whether participants had FPMs on their personal instruments to account for this variable in analyses.

Participants performed the 2-octave G-major scale and 1-octave D-major scale in melodic thirds twice, once with normal audio feedback and once with masked auditory feedback. This approach was consistent with previous research studies (Brown, 2013; Finney, 1997; Pfordresher, 2005) which suggested that the comparison of intonation under the different feedback conditions revealed insights regarding the integration of perceptual skills and motor skills. To mask the auditory feedback, I followed an approach similar to that used by Beck et al. (2017). Participants wore Bose 700 noise-canceling headphones while performing the exercises. Noise-canceling headphones work best for frequencies below 500 Hz and moderately well for frequencies between 500 and 1000 Hz (Helmut, 2018). Since the participants performed pitches above 500 Hz, pink noise in the form of a multi-talker babble mask was added through the headphones. This sounded like people talking in a cafeteria. To set the volume level of the babble mask, I asked participants to play the E-string notes of their scale with the headphones on. I adjusted the volume of the babble mask until they indicated that they could no longer hear themselves play. To protect the participants' hearing, the volume of the added noise did not exceed 85 decibels, a level deemed safe for hearing up to 8 hours in duration (United States Department of Labor, Occupational Safety and Health Association, 2008). Finally, in addition to the noise-canceling headphones and babble mask, I placed a practice mute on each participant's bridge. This dampened the sound considerably and reduced the volume of the added sound needed to mask the auditory feedback.

Performance Variables.

Previous research in sensorimotor integration of musical performance has compared several measures of performance under normal and masked auditory feedback conditions. Based on previous research, I selected the following four measures of musical performance: intonation error (IE), intonation precision (IP), interval error (IvE) and interval precision (IvP).

Intonation Error.

Intonation Error (IE) is the cent deviation from equal temperament of each performed pitch (Hopkins, 2015; Morrison, 2000; Pfordresher & Brown, 2007; Yarbrough et al., 1995; Yarbrough et al., 1997). Errors in the sharp direction yield positive values, and errors in the flat direction yield negative values. All but 6 participants' performances included errors in both the sharp and flat directions. Consequently, the majority of performances included positive and negative cent values for the intonation errors of single pitches. In these cases, the mean of the signed intonation error values would be smaller than the mean of the absolute values. To ensure that means of IE reflected the average magnitude of intonation error, I used the absolute values for computing IE.

Intonation Precision.

Intonation Precision (IP) is a measure of the variability of participants' intonation errors. Consistent with previous research, I used the standard deviation of the signed intonation error values to report precision (Beck et al., 2017; He & Zhang, 2017). The standard deviation of errors in a performance that consists of a combination of flat and sharp errors will be greater than the standard deviation of a performance in which all errors are flat or all errors are sharp. This scenario is illustrated in Figure 1. The number line on the left represents 4 pitch errors. The number line on the right shows the absolute values of the same pitch errors. Both groups of errors have the same mean absolute value but reflect differences in precision. I defined IP as the standard deviation of the signed errors because it is a better reflection of precision than the standard deviation of the absolute values of the errors.

Figure 1

Difference in Precision between Signed and Absolute Values of Errors.

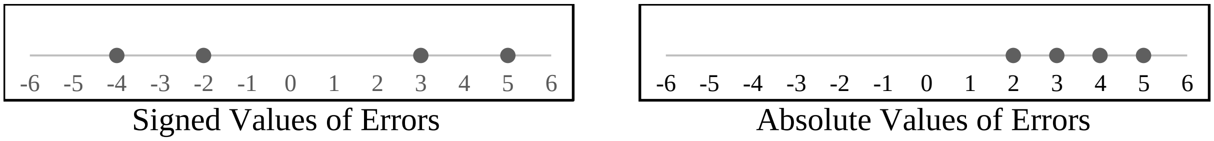

Note. This figure demonstrates the difference in grouping among a hypothetical group of two flat and two sharp pitch errors. The left number line shows the spacing between the signed values of the errors, and the right number line shows the spacing between the absolute values of the errors.

Interval Error.

Interval Error (IvE) is a measure of the spacing between fingers. Studies of accuracy of vocal performance have examined interval error in addition to, or instead of, intonation error. I could find no previous research that examined interval error in string performance. Young players may perform with accurate spacing between their fingers but with inaccurate intonation, particularly if the left hand is displaced.

The interval between each pair of successive pitches is equal to the frequency difference between those pitches converted to cents. Each semitone in equal temperament is equal to 100 cents. Therefore, the target interval is equal to the number of semitones x 100 cents. Interval error is the difference between the performed interval and the target interval (Beck et al., 2017).

Interval Precision.

Interval Precision (IvP) is the standard deviation of the signed values of the interval errors for each participant (Beck et al., 2017; He & Zhang, 2017). The rationale for using signed cent deviations for interval precision is the same as for intonation precision.

Student Musical Background Questionnaire (SMBQ)

After completing the pitch discrimination and performance tasks, the participants completed the SMBQ (see Appendix A) which consisted of 10 items: age, grade, gender, race/ethnicity, handedness (left/right), grade when string instruction began, private lesson instruction (yes/no), years of private lesson instruction, self-reported weekly practice time, and use of finger placement markers on a personal instrument (yes/no).

Data Collection Procedures

I secured approval for this study from the University of Michigan IRB, district administration (required by the Oklahoma school district), building principals, and orchestra teachers. I collected data in Michigan during November and December of 2019 and in Oklahoma during January and February of 2020. In coordination with each teacher, I made an initial visit to each class, introduced the study, and distributed an information sheet and consent form. I returned to each school approximately one week later and visited each class daily until all students who returned their consent forms had the opportunity to participate.

Each participant met with me individually in a practice room adjacent to their classroom to complete the study tasks. The process took approximately 15 minutes per participant. The full study procedures are outlined in the script below. The order of the performance conditions (normal and masked) was counterbalanced such that half of the participants performed under the normal feedback condition first and half under the masked feedback condition first. I piloted the script and study procedures with four undergraduate music education students who were enrolled in a secondary string instrument class. Based on their feedback, I made slight changes to improve clarity.

Data Collection Script

Welcome

- *Hi! Thank you for participating in this project. We are going to do 3 things: a listening task, a performance recording, and a questionnaire.*

Listening Task

- *Let's start with the listening task on the laptop. There are 16 tuning questions. The volume controls are here should you need to adjust the volume.*
- *Now, please put on the headphones and follow the directions on the screen. Stop when you get to Part 2.*

Performance Task.

(Practice)

- *Now we are going to do the performance part. Since this is not your personal violin, let's do a practice run-through of your G-major scale from the open G to the G on the E-string. Play up and down the scale. Use a long, slow, whole bow for each note, but do not use vibrato. Use fourth fingers instead of open strings.*
- *Let's do a practice run of your D-major thirds in the same way as you played the scale.*

Normal Feedback Condition

- *Let's check the tuning of each string.*
- *Now we will record the G major scale. Start when you are ready.*
- *Now we will record the D major thirds. Start when you are ready.*

Masked Feedback Condition

- *This is a practice mute, and it will make your sound much softer. Let's double check the tuning.*
- *Let's test out the headphones. When you put them on you will hear a sound like people talking in the cafeteria. Play the E-string notes of your scale with the headphones on. Can you hear yourself?*
- [If student says yes] *I will increase the volume a notch. Can you hear yourself now?*
- [If student says yes again] *I can't increase the volume anymore because it will be too loud. Play a little softer, and let's check again.*
- [Continue previous step until student indicates they cannot hear while playing.]
- *When you're ready, put the headphones back on. When I give you the thumbs-up, please play your G-major scale again with whole bows and no vibrato. Remember to use fourth fingers.*
- *Now play your D-major thirds with whole bows and no vibrato.*
- *You can take off the headphones now.*
- *Nice Job!*

(Questionnaire)

- *Last thing. This questionnaire is for you to let me know a little about your musical experiences. Once you're done filling it out you can head back to class.*
- *Thank you very much for your help!*

Analyses

All comparisons of frequencies in this study were converted to cents using the following formula: $cents = 1200 * \log_2(f_2/f_1)$ in which f_2 is the frequency of the participant's response and

f_1 is the reference pitch. Consistent with previous research in intonation, I assigned reference frequencies according to equal temperament with A4 = 440 Hz. Appendix C shows the specific frequency value for each pitch analyzed in this study. I refer to specific pitches by letter name and octave designation (e.g. middle C = C4).

Frequency Analysis of Audio-Recorded Pitches

I used Praat, a sound analysis program to determine the frequency of pitches from the audio recordings (Boersma & Weenink, 2019). This program has been used in several previous studies of intonation (Geringer et al., 2014; Hopkins, 2015; Schlegel & Springer, 2018). Praat was developed for analysis of vocal frequencies and often recognizes the overtone of a pitch instead of the pitch itself. As necessary, I used Adobe Audition to remove extra noise between the overtones in the audio files. This allowed Praat to recognize the fundamental frequencies of the pitches performed.

Following the procedures used in several previous studies, I recorded the average frequency of the center portion of each pitch, omitting the onset and outset of the pitch (Beck et al., 2017; Hopkins, 2015). The frequency of a pitch may fluctuate when a performer changes bow direction. Omitting the beginning and ends of each pitch from the frequency analysis provided a more accurate measure of each pitch. Two independent raters analyzed 10% of the audio files, and interrater reliability was high (ICC = .99). This was consistent with previous studies that also indicated high interrater reliability for frequency analysis (Hopkins, 2015; Yarbrough et al., 1995; Yarbrough et al., 1997).

Modifications to Planned Analysis

I recorded participants' performances of the G-major scale and the D-major melodic thirds under normal and masked auditory feedback conditions. Aural examination of the recordings revealed that while all participants completed the G-major scale, fewer than half of the participants completed the D-major melodic thirds. Scales were part of the participants' daily class routine; however, scales in thirds were not. The teachers taught the exercise to their students, but it is possible that they did not spend as much time with this exercise compared to daily scale work. I omitted the D-major melodic thirds performances from the analysis and answered the research questions based solely on the participants' G-major scale performances.

The G-major scale consists of 15 pitches performed in ascending and then descending order with the top pitch played once for a total of 29 performed pitches (G3, A3, B3, C4, D4, E4, F#4, G4, A4, B4, C5, D5, E5, F#5, and G5). Figure 2 shows the location of these pitches on the violin fingerboard. The first and last pitch, G3, is an open string which is performed without placing any of the left-hand fingers on the finger board. Each of the pitches D4, A4, and E4 can be performed as an open string or with a fourth finger. I requested, and the teachers instructed, the students to use fourth fingers in their performances for this study. However, many young students defaulted to the open string while performing. Not unexpectedly, the participants in this study were inconsistent in their use of fourth finger. This necessitated eliminating D4, A4, and E4 from the analysis. It is likely that the inclusion of both the open string and fourth-fingered versions of these pitches would have resulted in a lower value for intonation error than had all students used the fourth-fingered version. The analysis in the current study is based on 21 pitches (A3, B3, C4, E4, F#4, G4, B4, C5, D5, F#5, and G5 ascending and descending).

Figure 2

Location of G-Major Scale Pitches on the Violin Fingerboard

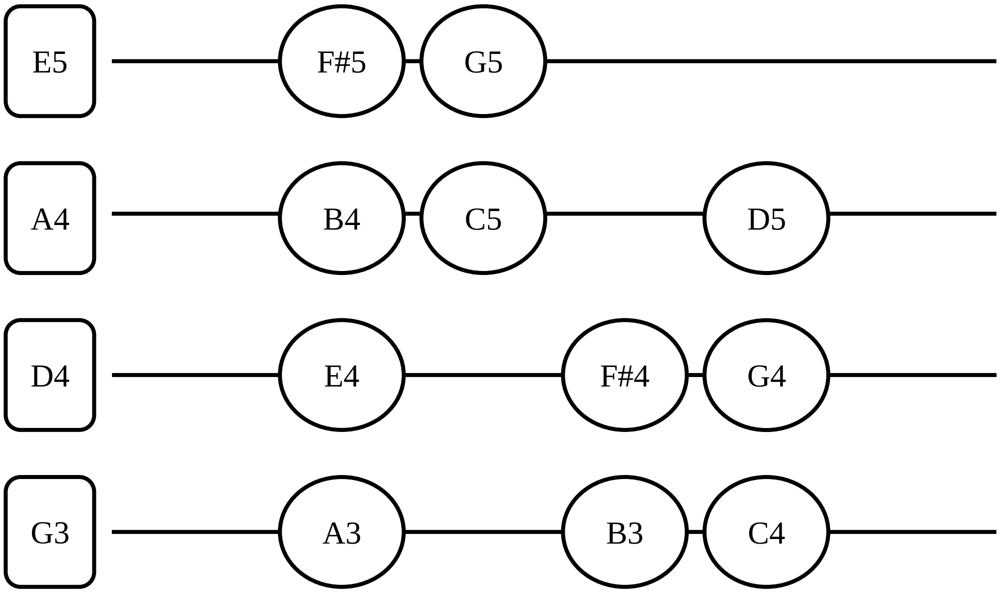

Note: Pitches in rectangles represent open strings. Pitches in circles are performed using first, second, and third fingers from left to right. Spacing reflects the number of semitones between adjacent pitches. Pitches close together are one semitone apart (e.g. B3–C4). Pitches with space between them are two semitones apart (e.g. A3–B3).

Statistical Analyses

I used Stata 16 for all statistical analyses. To answer Research Question 1, I used a correlation matrix to analyze the relationships among the following variables: (a) pitch discrimination threshold (PDT), (b) intonation error under normal conditions (IEN), (c) intonation error under masked conditions (IEM), (d) intonation precision under normal conditions (IPN), (e) intonation precision under masked conditions (IPM), (f) interval error under normal conditions (IvEN), (g) interval error under masked conditions (IvEM), (h) interval precision under normal conditions (IvPN), and (i) interval precision under masked conditions (IvPM).

To answer Research Question 2, I used hierarchical linear regression to test the relative influences of pitch discrimination threshold, intonation error under masked conditions, and student musical background characteristics on intonation under normal conditions. I did not use student fixed-effects in this model to allow for examination of specific student characteristics. The hierarchical regression consisted of five models. The first model followed previous research that examined the relationship between pitch discrimination threshold (PDT) and intonation error under normal conditions (IEN) (Hopkins, 2015; Yarbrough et al., 1997). Model 2 tested for the presence of a nonlinear relationship between PDT and IEN. In Model 3 I added intonation error under masked conditions (IEM) to represent sensorimotor skills. Model 4 tested for the presence of a nonlinear relationship between IEM and IEN and for an interaction effect of PDT and IEM. Lastly, Model 5 included the student characteristics of grade (GRA), handedness (HND), weekly practice time (WPT), private lessons (LSN), years of experience (YE), finger placement markers (FPM), and school (SCH). The models are presented below:

$$\text{Model 1: } IEN = \beta_0 + \beta_1 X_{PDT} + \varepsilon. \tag{3.1}$$

$$\text{Model 2: } IEN = \beta_0 + \beta_1 X_{PDT} + \beta_2 X_{PDT} * X_{PD} + \varepsilon. \tag{3.2}$$

$$\text{Model 3: } IEN = \beta_0 + \beta_1 X_{PDT} + \beta_2 X_{PDT} * X_{PDT} + \beta_3 X_{IEM} + \varepsilon. \tag{3.3}$$

$$\begin{aligned}\text{Model 4: } IEN = {} & \beta_0 + \beta_1 X_{PDT} + \beta_2 X_{PDT} * X_{PDT} + \beta_3 X_{IEM} + \beta_4 X_{IEM} * X_{IEM} + \\ & \beta_5 X_{IEM} * X_{PDT} + \varepsilon.\end{aligned} \tag{3.4}$$

$$\begin{aligned}\text{Model 5: } IEN = {} & \beta_0 + \beta_1 X_{PDT} + \beta_2 X_{PDT} * X_{PDT} + \beta_3 X_{IEM} + \beta_4 X_{IEM} * X_{IEM} + \\ & \beta_5 X_{IEM} * X_{PDT} + \beta_3 X_{GRA} + \beta_4 X_{HND} + \beta_5 X_{WPT} + \beta_6 X_{LSN} + \beta_7 X_{YE} + \\ & \beta_8 X_{FPM} + \beta_9 X_{SCH} + \varepsilon.\end{aligned} \tag{3.5}$$

Research Question 3 addressed independence of left-hand finger placement which Baader et al. (2005) noted was essential to violin performance. I used a linear regression model with student fixed-effects to examine intonation error for student i, note j, under condition k, according to finger number and direction (ascending or descending). The model is as follows:

$$IE_{\mathrm{ijk}} = \beta_0 + \beta_1 finger_{ijk} + \beta_2 direction \ + \ \mu_k + \ \Delta_i \ + \varepsilon_{ijk} \tag{3.6}$$

I used a similar model to examine interval error:

$$IvE_{\mathrm{ijk}} = \beta_0 + \beta_1 fingerpair_{ijk} + \ \beta_2 size_{ijk} + \ \mu_k + \ \Delta_i \ + \varepsilon_{ijk}. \tag{3.7}$$

Finger pair refers to the two fingers required to perform each interval (first and second or second and third). Size refers to the size of the interval (1 or 2 semitones), and direction refers to whether the interval was performed ascending or descending.

Summary of Chapter 3

The purpose of this study was to examine the extent to which pitch discrimination and sensorimotor skills explain the intonation of middle school violinists. In this chapter, I described the participants, data collection instruments, variables, and procedures. Participants (N = 179) were middle school violin students. They completed a perception task, performance task, and a musical background questionnaire. Though the performance task consisted of two exercises (2-octave G-major scale and 1-octave D-major melodic thirds), fewer than half of the participants completed the D-major melodic thirds exercises under both performance conditions. Consequently, I omitted the D-major melodic third responses from the subsequent analysis.

In Chapter 4, I present the results from the analysis of the perception and performance tasks. I begin with descriptive statistics for the perception and performance variables followed by the results for the three research questions.

CHAPTER IV

Results

The purpose of this study was to examine the extent to which pitch discrimination and sensorimotor skills explain the intonation of middle school violinists. Participants (*N* = 179) completed three tasks: (a) a pitch discrimination task, (b) a performance task, and (c) a musical background questionnaire. Table 10 presents a summary of the study tasks and variables.

In Chapter 3, I presented the summary statistics for the variables of the Student Musical Background Questionnaire which were as follows: (a) grade, (b) age, (c) gender, (d) race/ethnicity, (e) handedness, (f) grade of initial violin instruction, (g) private lessons (yes/no), (h) school grades during private lesson instruction, (i) weekly practice time in minutes, and (j) use of finger placement markers on their personal instruments (yes/no).

In the first section of this chapter, I present the summary statistics for the pitch discrimination task (Violin Tuning Perception Test). Then I present summary statistics for the four variables from the performance task, a 2-octave G-major scale performed under conditions of normal auditory feedback (N) and masked auditory feedback (M). The performance variables are intonation error (IEN, IEM), intonation precision (IPN, IPM), interval error (IvEN, IvEM), and interval precision (IvPN, IvPM). Tables 11–16 include means and standard deviations for all participants as well as for groups of participants according to grade, handedness, weekly practice time, private lessons, and use of finger placement markers on the personal instrument. I included each of these student characteristics in the regression model for Research Question 2 and accounted for student fixed- effects in the regression model for Research Question 3.

In the second section of this chapter, I present the results to the three research questions:

1. What are the correlations among pitch discrimination threshold and the following performance variables with and without auditory feedback: intonation error, intonation precision, interval error, and interval precision?
2. To what extent do pitch discrimination threshold and intonation error with masked auditory feedback explain the intonation error with normal auditory feedback of middle school string players when controlling for student characteristics of grade, years of experience, private lessons, handedness, finger placement markers, weekly practice time, and school?
3. Do intonation error or interval error differ according to which left-hand finger(s) are used to create the pitch(es)?

Table 10

Summary of Study Tasks and Variables

Tasks and Variables	Variable Descriptions
Perception: Violin Tuning Perception Test	
Pitch Discrimination Threshold (PDT)	Mean of the absolute value of the cent deviation between the response pitch and the reference pitch.
Performance: 2-Octave G-Major Scale	
Intonation Error (IEN, IEM)	Mean of the absolute value of the cent deviations between the performed pitches and the reference pitches.
Intonation Precision (IPN, IPM)	Standard deviation of the signed values of the intonation errors.
Interval Error (IvEN, IvEM)	Mean of the absolute values of the cent deviations between the performed intervals and the reference intervals.
Interval Precision (IvPN, IvPM)	Standard deviation of the signed values of the interval errors
Student Musical Background Questionnaire	
Grade	6th, 7th, or 8th
Age	Self-reported (years)
Gender	Self-reported
Race/ethnicity	Selected from NCES categories.
Handedness	Left, Right
Grade of initial violin instruction	PreK–8th (choose 1)
Private lessons	Yes/no
School grades during private lessons	PreK–8th (select all that apply)
Weekly Practice Time	Minutes/week
Finger Placement Markers on instrument	Yes/no

Note. In the variable abbreviations, the letter N designates the normal auditory feedback condition. The letter M designates the masked auditory feedback condition.

Summary Statistics: Pitch Discrimination Threshold

Participants' pitch discrimination thresholds (PDT) were measured using Part 1 of the Violin Tuning Perception Test (Hopkins, 2015). Overall reliability for the VTPT was high (α = .88). The means and standard deviations presented in Table 11 were calculated from the absolute values of cent deviations of participants' responses to the VTPT items. Consistent with previous research, PDT means decreased as grade increased (Hopkins, 2014; Yarbrough et al., 1995). PDT means also decreased as practice time per week increased.

Table 11

Pitch Discrimination Thresholds

Group	*M*	*SD*
Overall	8.42	7.05
Grade		
6	10.31	7.90
7	7.04	5.47
8	6.59	6.46
Weekly Practice Time		
< 1 hour	10.89	8.79
1–2 hours	7.46	5.63
> 2 hours	5.95	4.26
Private Lessons		
Yes	6.69	5.16
No	9.05	7.55
Handedness		
Right	8.38	7.17
Left	8.99	5.80
Finger Placement Markers		
Yes	9.67	7.97
No	7.52	6.19

Summary Statistics: Performance Task

Participants performed a 2-octave G-major scale ascending and descending. As noted in Chapter 3, three pitches (D4, A4, and E5) can be performed by using the fourth finger or by playing the open string. Though asked to use their fourth fingers to perform these pitches, many participants performed them using open strings. To ensure that analysis of intonation reflects only those pitches performed as fingered notes, I omitted the open-string pitches from the analysis. Consequently, the analysis reported here includes the following 21 pitches: A3, B3, C4, E4, F#4, G4, B4, C5, D5, F#5, and G5. Each pitch was played twice, ascending and descending, except G5, the top pitch of the scale which was performed once.

Intonation Error

Means and standard deviations for intonation error under normal and masked conditions are shown in Table 12. Both mean IEN and mean IEM decreased as grade increased. Participants who took private lessons had lower means for IEN and IEM compared to those who did not study privately, and right-handed participants had lower means for IEN and IEM than left-handed participants. The mean IEN and IEM were higher for participants who used finger placement markers on their personal instruments than those who did not.

Overall, intonation error was 3.7 cents greater under masked conditions compared to normal conditions. A paired *t* test indicated this difference was significant ($t = -4.07$, $p < .001$). Mean IEM was greater than mean IEN for all participant groups except left-handed participants. Differences between IEN and IEM were greatest for participants in Grade 8 and participants who took private lessons. This may indicate that these groups used auditory feedback to guide their performance to a greater extent than did participants in grades 6 or 7, or participants who did not take private lessons. However, for all groups, the difference in mean intonation error between the masked and normal conditions was less than the groups' respective PDT (refer to Table 11).

Table 12

Intonation Error under Conditions of Normal and Masked Auditory Feedback

	Normal Conditions		Masked Conditions		
	M	*SD*	*M*	*SD*	Δ*M*
Total	29.73	15.77	33.43	13.45	3.7
Grade					
6	33.87	16.01	36.61	12.95	2.74
7	27.80	15.54	31.13	13.18	3.33
8	24.08	13.46	30.30	13.78	6.22
Weekly Practice Time					
< 1 hour	30.03	13.48	33.91	12.23	3.88
1–2 hours	30.14	17.07	33.48	12.94	3.34
> 2 hours	28.63	17.31	32.59	16.13	3.96
Private Lessons					
Yes	21.21	12.66	27.77	13.60	6.56
No	32.86	15.68	35.50	12.83	2.64
Handedness					
Right	28.95	15.63	33.27	13.63	4.32
Left	38.35	15.09	35.21	11.61	-3.14
Finger Placement Markers					
Yes	33.68	16.77	35.79	12.90	2.11
No	26.89	14.42	31.73	13.92	4.84

Intonation Precision

Intonation precision reflects the variability of participants' intonation errors. Results for intonation precision under normal and masked conditions are reported in Table 13. Because precision is a measure of variability, lower values indicate greater precision. Each participant performed 21 pitches, and all but 6 of the participants' performances consisted of both sharp and flat errors. For precision to reflect the true distribution of each participant's errors, I used signed values of intonation errors to calculate a standard deviation for each participant. The standard deviation of the signed intonation errors is greater than the standard deviation of the absolute intonation errors (see Figure 1 in Chapter 3) and reflects the larger variability associated with errors in the sharp and flat directions. A comparison of the mean IPN column from Table 13 and the standard deviation column of IEN from Table 12 shows this result.

Overall, participants' performances were less precise under masked conditions than normal conditions. A paired *t* test indicated this difference was significant ($t = -7.05$, $p < .001$). Under the normal condition, mean precision values were lower, indicating greater precision, for participants in eighth grade compared to lower grades. The most precise subgroup under both conditions was that of participants who took private lessons. This group also showed the greatest mean difference between conditions.

Table 13

Intonation Precision under Conditions of Normal and Masked Auditory Feedback

	Normal Conditions		Masked Conditions		
	M	*SD*	*M*	*SD*	Δ*M*
Total	28.03	13.15	32.79	12.02	4.76
Grade					
6	32.56	12.82	36.96	11.40	4.40
7	25.81	12.73	30.18	12.32	4.37
8	21.99	11.32	28.07	10.07	6.08
Weekly Practice Time					
< 1 hour	29.53	11.91	34.33	11.23	4.80
1–2 hours	28.54	13.78	32.60	12.46	4.06
> 2 hours	24.84	13.80	30.61	12.47	5.77
Private Lessons					
Yes	19.53	11.98	27.75	11.96	8.22
No	31.15	12.18	34.64	11.55	3.49
Handedness					
Right	27.71	13.32	32.84	12.27	5.13
Left	31.54	10.91	32.23	9.15	0.69
Finger Placement Markers					
Yes	31.43	12.21	34.78	11.11	3.35
No	25.58	13.31	31.35	12.49	5.77

Interval Error

Interval error was measured for the intervals between adjacent fingered pitches. The brackets in Figure 3 show the intervals included in the analysis. Participants performed each interval twice, ascending and descending. The scale consisted of two sizes of intervals: half-steps (1 semitone, 100 cents) and whole steps (2 semitones, 200 cents). The size of the brackets reflects the two interval sizes. To calculate interval error, I computed the distance in cents between each pair of adjacent pitches and subtracted either 100 or 200 cents according to the size of the interval. Positive values indicated the interval was larger than the reference interval. Negative values indicated the performed interval was smaller than the reference interval. As with intonation error, I used absolute values to determine results for interval error (see Table 14).

Figure 3

Location of G-Major Scale Intervals on the Violin Fingerboard

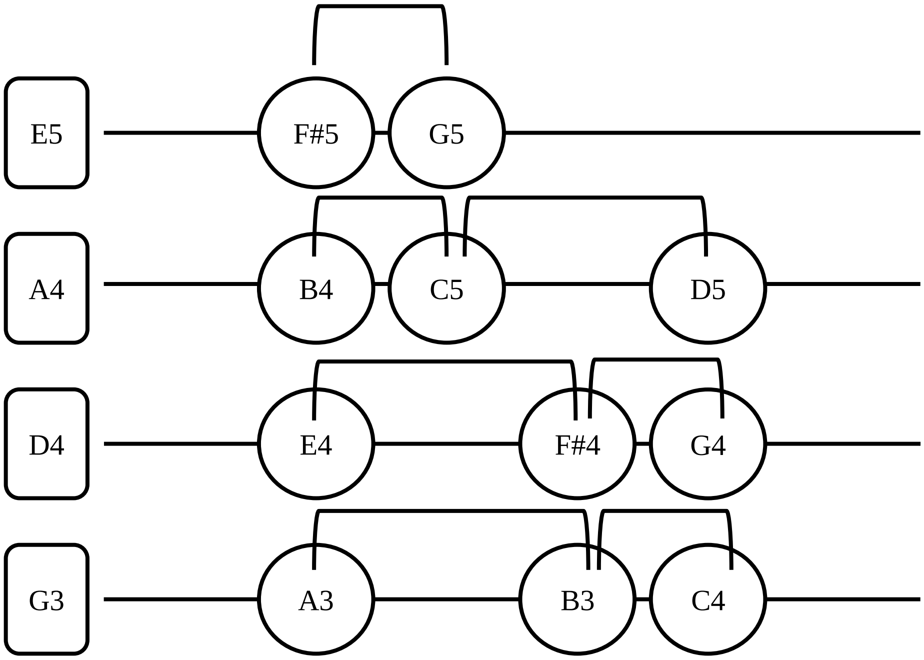

Interval error was significantly greater under the masked condition ($t = -3.47$, $p < .001$), but as with intonation error, the difference in means (2.47 cents) was small. Results for mean IvE under both conditions revealed trends similar to those of mean IE. Participants who take private lessons had a lower mean IvE than those who did not. Right-handed participants had a lower mean IvE than left-handed participants, and participants who did not use FPMs had a lower mean

IvE than those who did use FPMs. As with intonation error, mean IvE decreased as grade level increased.

Table 14

Interval Error under Conditions of Normal and Masked Auditory Feedback

	Normal Conditions		Masked Conditions		
	M	*SD*	*M*	*SD*	Δ*M*
Total	31.78	17.02	34.25	16.44	2.47
Grade					
6	36.92	15.30	39.20	13.95	2.28
7	29.57	18.05	31.50	19.23	1.93
8	24.48	15.75	28.11	13.77	3.63
Weekly Practice Time					
< 1 hour	32.28	14.93	36.52	15.64	4.24
1–2 hours	33.17	17.55	33.66	15.92	0.49
> 2 hours	28.82	19.25	31.51	18.29	2.69
Private Lessons					
Yes	21.30	14.60	26.13	14.77	4.83
No	35.62	16.25	37.22	16.01	1.60
Handedness					
Right	31.29	17.03	34.09	16.49	2.80
Left	37.18	16.50	35.97	16.29	-1.21
Finger Placement Markers					
Yes	35.63	15.27	37.48	14.26	1.85
No	29.01	17.73	31.91	17.55	2.90

Interval Precision

Interval precision reflects the variability of each participant's interval errors. As with intonation precision, I used the signed interval errors to calculate a standard deviation of the interval error for each participant. Results are in Table 15. Overall, interval precision was quite poor. Only eighth-grade participants and participants who took private lessons had mean interval precision scores of less than 30 cents. Interval precision under the masked condition was significantly different ($t = -3.21$, $p = .002$) than interval precision under the normal condition, but as with the previous performance variables, the difference in mean of 3.15 cents was quite small. Interval precision values were greater under the masked condition than the normal condition for all groups, except left-handed participants. This indicated that left-handed participants were more precise under the masked condition than the normal condition.

Table 15

Interval Precision under Conditions of Normal and Masked Auditory Feedback

	Normal Conditions		Masked Conditions		
	M	SD	M	SD	Δ*M*
Total	38.46	20.74	41.61	20.01	3.15
Grade					
6	44.52	19.25	47.54	17.66	3.02
7	35.74	21.12	38.34	22.55	2.60
8	29.98	19.76	34.25	17.18	4.27
Weekly Practice Time					
< 1 hour	38.26	17.76	44.10	18.83	5.84
1–2 hours	40.65	22.55	40.95	19.65	0.30
> 2 hours	35.36	22.26	38.68	22.28	3.32
Private Lessons					
Yes	26.22	19.00	33.10	20.20	6.88
No	42.94	19.59	44.73	19.08	1.79
Handedness					
Right	37.88	20.78	41.48	20.09	3.60
Left	44.80	19.83	43.12	19.75	-1.68
Finger Placement Markers					
Yes	42.25	18.86	44.76	17.58	2.51
No	35.72	21.68	39.34	21.38	3.62

Research Question Results

Research Question 1

Research Question 1 asked, what are the correlations among pitch discrimination threshold (PDT) and the following performance variables with and without auditory feedback: intonation error (IE), intonation precision (IP), interval error (IvE), and interval precision (IvP)? Table 16 shows the correlation matrix for these variables. Under normal auditory feedback conditions, there was a moderate, significant correlation between PDT and IEN and a weak, significant correlation between PDT and IvEN. Under masked feedback conditions, the correlation between PDT and IEM was present but weak. Correlations between IE and IP were strong for intonation under both conditions ($r > .6$). The correlations between IvE and IvP were nearly perfect under both conditions ($r > .95$).

Table 16

Correlation Matrix of Pitch Discrimination Threshold and Performance Variables

	PDT	IEN	IPN	IEM	IPM	IvEN	IvPN	IvEM	IvPM
PDT									
IEN	.35								
IPN	.34	.64							
IEM	.21	.66	.47						
IPM	.23	.52	.75	.69					
IvEN	.28	.59	.92	.42	.71				
IvPN	.27	.56	.90	.41	.68	.97			
IvEM	.23	.50	.78	.48	.85	.84	.80		
IvPM	.22	.44	.74	.47	.85	.79	.79	.96	

Note. All correlations are significant ($p < .01$).

Research Question 2

I used a hierarchical regression model to answer Research Question 2: to what extent do pitch discrimination threshold and intonation error with masked auditory feedback explain intonation error with normal auditory feedback of middle school string players when controlling for student characteristics of grade, years of experience, private lessons, and self-reported weekly practice time? Before presenting the results of the regression models, I address the assumptions of linear regression.

Checks of Assumptions of Linear Regression.

I examined the data for assumptions of normality, homoskedasticity, independence of observations, and multicollinearity. The dependent variable, IEN, and the residuals should be normally distributed. Skewness/kurtosis tests revealed that neither IEN χ^2 (2), N =179, =10.20, $p < .00$) nor the residuals χ^2 (2), N =179, =14.38, $p < .001$) were normally distributed. However, the large sample size of the current study ($N = 179$) provides robustness against the violations of the normality assumptions of the dependent variable and the residuals (Acock, 2016).

A Breusch-Pagen/Cook Weisberg test for heteroskedasticity was significant (χ^2 (1), N =179, =10.20, $p < .001$); consequently, the null hypothesis of homoskedasticity must be rejected. To correct for the presence of heteroskedasticity, I reported robust standard errors in the regression models.

Linear regression assumes that observations are independent. It is possible that the errors for participants from one school may be more correlated with each other than errors of participants from different schools. I included school as a categorical variable to test for the presence of a significant school effect.

Lastly, I examined the data for multicollinearity. The range of Variance Inflation Factors for the explanatory variables was 1.6–2.59. The low VIF values (< 10) indicate little presence of multicollinearity.

Description of Regression Results.

The hierarchical regression model consists of five models. I present each model and a description of its results. A summary of all five models is presented in Table 17.

Model 1.

The first model included PDT as the single independent variable. Results indicated that PDT was a significant predictor of IEN ($p < .001$) and accounted for 12% of the variance in IEN.

$$IEN = \beta_0 + \beta_1 X_{PDT} + \varepsilon \,. \tag{4.1}$$

Model 2.

In Model 2, I tested for the possibility of a nonlinear relationship between PDT and IEN. The quadratic term was not significant, and R^2 did not change. I omitted this term from subsequent models.

$$IEN = \beta_0 + \beta_1 X_{PDT} + \beta_2 X_{PDT} * X_{PDT} + \varepsilon. \tag{4.2}$$

Model 3.

Model 3 included PDT and IEM as independent variables. Both variables were significant predictors of intonation ($p < .001$) and together explained 49% of the variance in intonation. The addition of IEM to the model explained 37% more of the variance in IEN than PDT alone. The change in R^2 was significant ($p < .001$).

$$IEN = \beta_0 + \beta_1 X_{PDT} + \beta_2 X_{IEM} + \varepsilon. \tag{4.3}$$

Model 4.

In Model 4, I tested for the existence of a nonlinear relationship between IEN and IEM. I also tested for an interaction between PDT and IEM. Neither of these terms was significant and R^2 did not change. I omitted them from subsequent models.

$$\begin{aligned} IEN = {} & \beta_0 + \beta_1 X_{PDT} + \beta_2 X_{PDT} * X_{PDT} + \beta_3 X_{IEM} + \beta_4 X_{IEM} * X_{IEM} + \\ & \beta_5 X_{IEM} * X_{PDT} + \varepsilon. \end{aligned} \tag{4.4}$$

Model 5.

Lastly, I added student characteristics of grade, years of experience, self-reported weekly practice time, handedness, use of finger placement markers, and private lessons to Model 5. School was added to control for possible teacher effect. Adding student characteristics to the model explained an additional 7% of the variance in IEN.

$$IEN = \beta_0 + \beta_1 X_{PDT} + \beta_2 X_{IEM} + \beta_3 X_{GRA} + \beta_4 X_{HND} + \beta_5 X_{WPT} + \beta_6 X_{LSN} + \beta_7 X_{YE} + \beta_8 X_{FPM} + \beta_9 X_{SCH} + \varepsilon \ . \tag{4.5}$$

Standardized beta coefficients indicated that IEM (ß = .55) was the strongest predictor of IEN. On average, a 1-unit increase in IEM was associated with a .65 cent increase in IEN when controlling for PDT and student characteristics.

PDT was a weak predictor of intonation under normal conditions (ß = .23). On average, a 1-unit increase in PDT was associated with a .52 cent increase in IEN conditions when controlling for IEM and student characteristics.

A partial *F* test with all student characteristics revealed they were not jointly significant predictors of IEN when controlling for PDT and IEM (*F*(13, 163) = 1.66, *p* = .07). The only individual student characteristic that was a significant predictor of IEN was use of finger placement markers on personal instruments. On average, the IEN of participants who used FPMs was 3.85 cents greater than of participants who did not use FPMs when controlling for PDT, IEM, and other student characteristics. Student characteristics of grade, years of instruction, practice time, handedness, and private lessons were not individually significant predictors of IEN. The coefficients for the groups within categorical variables refer to the relationships between those groups.

To examine whether variables with more than three categories were jointly significant, I used partial *F* tests. Neither school (*F*(5, 163) = 1.49, *p* = 0.19), grade (*F*(2, 163) = 0.50, *p* = .24), nor weekly practice time (*F*(2, 163) = 0.50, *p* = .61). were significant predictors of IEN.

Table 17

Hierarchical Regression Results for Intonation Error under Normal Conditions

Variable	*B*	*Robust SE B*	*p*	ß	R^2	ΔR^2
Model 1					.12	
PDT	0.78***	0.14	.000	.35		
Constant	23.17***	1.60	.000			
Model 2						
PDT	1.05**	0.28	.002	.47	.12	
PDT*PDT	-0.01	0.00	.127	-.14		
Constant	21.76**	2.06	.000			
Model 3					.49	.37***
PDT	0.48***	0.13	.000	.22		
IEM	0.72***	0.07	.000	.62		
Constant	1.43	2.08	.495			
Model 4						
PDT	0.75*	0.32	.021		.49	
IEM	0.71**	0.23	.003	.34		
IEM*IEM	0.00	0.00	.747	.60		
IEM*PDT	-0.01	0.01	.405	.08		
Constant	0.67	3.88	.862	-.15		
Model 5					.56	.07*
PDT	0.52***	0.13	.000	.23		
IEM	0.64***	0.07	.000	.55		
Years of Experience	-1.24	0.72	.125	-.12		
Grade						
7	1.79	2.29	.436	.05		
8	2.36	2.39	.325	.06		
School						
B	3.00	2.98	.314	.08		
C	-2.58	3.18	.419	-.06		
D	1.60	2.93	.586	.03		
E	-1.21	2.53	.632	-.03		
F	4.09	2.77	.142	.11		
Handedness						
Left	6.49	3.34	.054	.11		
FPMs						
Yes	3.85*	1.93	.048	.12		
Private Lessons						
Yes	-2.74	2.29	.234	-.08		
Weekly Practice Time						
1–2 hours	2.61	1.93	.191	.08		
>2 hours	3.85	2.33	.101	.10		
Constant	2.22	4.20	.596			

*$p < .05$. **$p < .01$. ***$p < .001$

Research Question 3

In Research Question 3, I used linear regression with student fixed-effects to examine differences in intonation error according to finger number. Of the 21 pitches performed, pitches A3, E4, B4, and F#5 were performed with the first finger, pitches B3, F#4, C5, and G5 were performed with the second finger, and pitches C4, G4, and D5 were performed with the third finger (see Figure 1). The dependent variable was Intonation Error for student *i*, note *j*, under condition *k*. Condition was normal or masked auditory feedback. Finger number and direction (ascending or descending) were independent variables. Results are shown in Table 18.

$$IE_{\mathrm{ijk}} = \beta_0 + \beta_1 finger_{ijk} + \beta_2 direction \, + \, \mu_k + \, \Delta_i \, + \varepsilon_{ijk}. \tag{4.6}$$

Table 18

Regression Results for Intonation Error on Finger and Direction

Variable	*B*	*Robust SE B*	*p*	95% CI	
				LL	*UL*
Finger					
2	12.11***	0.64	.000	10.77	13.26
3	2.31***	0.67	.000	1.01	3.62
Direction					
Descending	-1.30*	0.54	.016	-2.36	-0.24
Condition					
Masked	3.70***	0.54	.000	2.64	4.75
Constant	29.20***	3.63	.000	22.08	36.32

Note. CI = confidence interval; *LL* = lower limit; *UL* = upper limit.

p* < .05, * *p* < .001.

The overall model was significant (*F* (182, 7335) = 15.89, *p* < .001, R^2 = .28). On average, pitches performed by the second finger were 12.11 cents less accurate that pitches performed by the first finger when controlling for pitch direction, condition, and student fixed-effects. Third finger error was significantly greater in comparison to first finger error by 2.3 cents. To compare intonation error between the pitches performed by the second and third fingers, I ran the regression again with second finger as the reference category for Finger. Results indicated that pitches performed by the second finger were 9.8 cents less accurate than pitches performed by the third finger.

Pitches performed in the descending portion of the scale were slightly but significantly more accurate than pitches performed in the ascending portion of the scale. As expected from the regression model used in Question 2, pitches performed in the masked condition were significantly less accurate than pitches performed in the normal condition. A partial *F* test indicated that student fixed-effects were significant (*F*(178, 7335) = 13.75, *p* < .001).

I also examined interval error using a linear regression model with student fixed-effects. As with the previous model, this model considered interval error for student *i,* interval *j,* under condition *k* (normal or masked).

$$IvE_{\mathrm{ijk}} = \beta_0 + \beta_1 fingerpair_{ijk} + \ \beta_2 size_{ijk} + \ \mu_k + \ \Delta_i \ + \varepsilon_{ijk}. \qquad (4.7)$$

Finger pair referred to the two fingers required to perform each interval (first and second or second and third). Size referred to the size of the interval (1 or 2 semitones), and direction referred to whether the interval was performed ascending or descending. Results (see Table 19) indicated that participants performed whole steps on average 6.5 cents more accurately than half steps. Small but significant differences existed according to finger pair and condition. As these differences were less than 3 cents, they have limited practical significance. Interval direction was not significant. A partial *F* test indicated that student fixed-effects were significant (*F* (178, 4829) = 9.16, *p* < .001).

Table 19

Regression Results for Interval Error on Finger Pair, Interval Size, and Direction

Variable	*B*	*Robust SE B*	*p*	95% CI	
				LL	*UL*
Finger Pair					
2nd-3rd fingers	-2.59***	0.81	.003	10.77	13.26
Size				1.01	3.62
Whole	-6.51***	0.81	.000		
Direction				-2.36	-0.24
Descending	1.20	0.79	.131		
Condition				2.64	4.75
Masked	2.46***	0.79	.002	22.08	36.32
Constant	50.05***	5.35	.000		

Note: Overall model is significant $F(181, 4830) = 9.43$, $p < .001$, $R^2 = .26$.

*** $p < .001$.

Summary of Chapter 4

In this chapter I presented summary statistics for each of the perception (PDT) and performance variables: Intonation Error (IEN, IEM), Intonation Precision (IPN, IPM), Interval Error (IvEN, IvEM) and Interval Precision (IvPN, IvPM). Mean differences between performance under normal and masked auditory feedback conditions were small but significant for each of the performance variables. Mean scores in both normal and masked conditions revealed that participant performance on all variables improved with increasing grade, taking private lessons, right-handedness, and non-use of FPMs. However, the significance of these differences should be interpreted through the results of the regression model presented for Research Question 2. When controlling for IEM and PDT, only the difference in FPM use was significant for IEN.

Research Question 1 addressed the correlations among PDT and the performance variables. I found a significant, moderate, positive correlation between PDT and IEN. The correlation between PDT and IEM was weaker than that for PDT and IEN. Correlations between precision and accuracy for intonation (single pitches) and intervals were significant, moderate, and positive under normal conditions and near perfect under masked conditions.

I used a hierarchical multiple linear regression model to examine the extent to which PDT, IEM, and student characteristics explained IEN. The variables PDT, IEM, and the student characteristic of handedness were significant predictors. Standardized beta coefficients indicated that IEM was a strong predictor, PDT a weak predictor, and FPMs a weaker predictor that PDT.

Lastly, to answer Research Question 3, I used a linear regression model with student fixed-effects to examine intonation error according to the left-hand finger number and direction. I used a second model to examine interval error according to finger pair, interval size, and direction. Results indicated that pitches performed by the second finger were less accurate by 9 cents compared to third finger and 12 cents compared to first finger. Direction of the pitch was not significant. For interval error, whole-step intervals were on average 6 cents more accurate than half-step intervals. Ascending intervals were slightly more accurate than descending intervals, and intervals performed with the first and second fingers were more accurate than intervals performed with the second and third fingers.

In the next chapter I, discuss these results and interpret them in the context of previous research in music education and sensorimotor integration. I also offer implications of the results for pedagogy followed by limitations and suggestions for future research.

CHAPTER V

Discussion

Intonation in musical performance is a blend of perception and action. Previous research in music education has examined auditory perception by analyzing pitch discrimination thresholds and has examined action by analyzing intonation error during musical performance (Demorest, 2001; Geringer, 1983; Hopkins 2014; 2015; Morrison, 2000; Yarbrough et al., 1995; Yarbrough et al, 1997). Music educators assert accurate pitch discrimination is necessary to learn to play with good intonation (Benham et al., 2011; Galamian, 1962; Green, 1966; Hopkins, 2019; Suzuki & Suzuki, 1983); however, pitch discrimination alone does not offer a satisfactory explanation of intonation accuracy. Correlations between pitch discrimination thresholds and intonation accuracy have been found for some groups of students, notably among stronger performers (Demorest 2001; Demorest & Clements, 2007; Geringer, 1983), and/or among students of a single grade level (Geringer, 1983; Hopkins, 2015). Other studies that examined participants with wider ranges of experience and skills have yielded no correlation between pitch discrimination and intonation accuracy (Yarbrough et al., 1995; Yarbrough et al, 1997).

Cognitive psychologists have proposed that sensorimotor skills, formed by the association of goal-directed action and perception during learning, may provide a more satisfactory explanation of accuracy in musical performance than either perception or action alone (He & Zhang, 2017; Pfordresher, 2019; Pfordresher & Brown, 2007). Scholars have examined sensorimotor integration, specifically auditory-motor integration, in musical performance by comparing performance accuracy under conditions of normal, masked, and altered auditory feedback (Beck et al., 2017; Chen et al., 2008, 2013; Finney, 1997; Pfordresher, 2005; Pfordresher & Brown, 2007). Their research results have indicated small or insignificant differences in performance accuracy between conditions of normal and masked feedback. They interpreted these results to mean that the performers do not rely on auditory feedback to execute the motor skills necessary for musical performance. Scholars viewed this as evidence supporting the existence of sensorimotor skills.

In this study, I sought to examine intonation as a sensorimotor skill; specifically, the purpose of this study was to examine the extent to which pitch discrimination and sensorimotor skills explain the intonation of middle school violinists. Participants (*N* = 179) were middle school violinists from orchestra programs in Michigan and Oklahoma. The participants completed three tasks: (a) a pitch discrimination task, (b) a performance task and (c) a musical background questionnaire. The pitch discrimination task consisted of Part One of the Violin Tuning Perception Test (VTPT) (Hopkins, 2015). The performance task consisted of a 2-octave G-major scale and a 1-octave D-major scale in melodic thirds performed under conditions of normal and masked auditory feedback. The 11-item musical background questionnaire contained items related to musical experience and demographic information.

In this chapter, I discuss the results of the individual variables of pitch discrimination threshold, intonation error, intonation precision, interval error, and interval precision. Next, I discuss the results according to the three research questions. Lastly, I discuss the extent to which the results of this study support a sensorimotor explanation of intonation and offer suggestions for pedagogy and future research.

Discussion of Variables

Pitch Discrimination Threshold

Pitch discrimination threshold indicated the smallest difference that participants could discern between two pitches as measured by performance on the unison pitch-matching items of the Violin Tuning Perception Test (Hopkins, 2015). The mean pitch discrimination threshold for all participants was 8.42 cents which is comparable to results from other studies with participants of similar age and musical experience (Hopkins, 2014, 2015; Yarbrough et al., 1997). Research in the field of acoustics has found that the average pitch discrimination threshold of musically untrained adults is 25–30 cents (Buss et al., 2017; Fancourt et al., 2013). These results support the conclusions from previous research that lower pitch discrimination thresholds are associated with musical training (Hopkins, 2014; Yarbrough et al., 1995).

Geringer et al. (2014) noted that differences in means of intonation accuracy may be statistically significant but not musically or practically significant. I will use the mean pitch discrimination threshold of 8.42 cents as a guide to interpret the practical significance of the results of the performance variables.

Intonation Error

Intonation error was the cent deviation of the performed pitches in the 2-octave G major scale from their respective equal temperament reference pitches. Under normal auditory feedback conditions, the mean intonation error was 29.73 cents. This is more than 3 times the mean pitch discrimination threshold of 8.42 cents, indicating that participants could discern differences in pitch much more accurately than they could perform pitches. Previous research in music education has also found pitch discrimination thresholds to be lower than intonation error (Demorest, 2001; Demorest & Clements, 2007; Hopkins, 2015; Yarbrough et al., 1995;

Yarbrough et al., 1997). Also consistent with previous research, intonation error decreased as experience increased from 33.87 cents for sixth-grade participants to 24.08 cents for eighth grade participants. Similarly, participants who took private lessons performed more accurately (*M* = 21.21) than participants who did not take private lessons (*M* = 32.86), a result also found by Morrison (2000) and Yarbrough et al. (1995).

Intonation error was slightly greater for the performances under the masked condition (*M* = 33.43 cents) than the normal condition (*M* = 29.73 cents). This difference was significant, but the mean difference of 3.7 cents is less than half of the mean pitch discrimination threshold and thus is not practically significant. The groups that showed the greatest differences between normal and masked conditions were eighth grade participants and participants who took private lessons. These mean differences are nearly equal to the pitch discrimination thresholds of those groups. It is possible the masking auditory feedback had a slightly greater impact on these participants compared to their peers. Previous research that compared performance under normal and masked conditions found no differences between pianists' performances and small but significant differences for vocalists and cellists (Beck et al., 2017; Chen et al., 2008, 2013; Pfordresher, 2005). The current study supports these results.

Two results appear to differ from previous research. In Bergonzi's (1997) study, participants who used finger placement markers (FPMs) performed with better intonation than participants who did not use FPMs. In contrast, results of the current study found the reverse. The mean intonation error of participants who used FPMs was 7 cents greater than that of participants who did not use FPMs. This difference was significant in the regression model for Research Question 2 when controlling for pitch discrimination threshold, intonation error under masked conditions, and several student characteristics. This result is not surprising. In his study, Bergonzi randomly assigned FPMs to beginning string participants. In contrast, use of FPMs by participants in the current study was anything but random. A common goal among string teachers and students is to remove FPMs as soon as the student no longer needs them. Consequently, students who use FPMs past the first year of instruction may continue to rely on them for assistance with finger placement.

The use of FPMs provides visual and haptic feedback to students regarding their finger placement. The focus of the current study was auditory-motor integration; therefore, the use of FPMs posed a threat to validity, and it was necessary for participants to perform on instruments without FPMs. I recognized that participants accustomed to using FPMs on their personal instruments may have found the absence of FPMs challenging. To address this, I included a practice trial of the performance material in the study procedures to allow each participant an opportunity to perform on the instrument prior to recording the performance tasks.

Another result that appears to differ from previous research is the difference in intonation error and interval error according to handedness. The mean intonation error under normal conditions for right-handed participants (28.95 cents) was nearly 10 cents lower than for left-handed participants (38.35 cents). Moreover, the difference in intonation error according to feedback condition showed that mean right-handed error increased by 4.32 cents, but mean left-handed error decreased by 3.14 cents. These differences existed despite a negligible difference in pitch discrimination threshold between the two groups (*M* (right) = 8.38, *M* (left) = 8.99). Research comparing performance accuracy of musicians according to handedness has found no significant differences in professional string players or pianists (Kincaid et al., 2002; Kopiex et al., 2011). String instrument performance places very different motor skill demands on the left and right hands. Teachers may need to offer additional support to left-handed students as results of the current study indicate that handedness may be associated with differences in performance during the early years of instruction.

Interval Error

Interval error was the difference between the cent value of each interval performed by adjacent, fingered pitches in the 2-octave G-major scale and the corresponding cent value of the interval in equal temperament. Interval error has been examined in studies of singing accuracy (Beck et al, 2017; Pfordresher & Brown, 2007), but I could find no previous research that measured interval error in string performance. It was possible that students could perform incorrect pitches yet maintain correct spacing between the left-hand fingers, particularly if the left hand was out of position. Results did not indicate that this occurred. The mean interval error was only 2 cents greater than the mean intonation error. Participants used first position and did not shift the left hand to complete the performance tasks. Involvement of shifting may have revealed a greater difference between interval and intonation error.

Comparison of mean interval error between feedback conditions revealed a small but significant difference of 3 cents. This difference is not practically significant, and it is smaller than the difference in mean interval error for normal and masked feedback conditions found among vocalists by Beck et al. (2017). Both Beck et al. (2017) and Chen et al. (2008, 2013) suggested that vocalists and cellists relied more on auditory feedback for performance accuracy than did pianists. The smaller mean differences in intonation error and interval error between normal and masked conditions in the current study offer weak support to those results.

Intonation Precision

Precision was a measure of the variability of participants' intonation errors. I used the standard deviation of the signed cent deviations to determine the values for precision. The overall mean intonation precision was 28.03 cents which indicates participants were highly imprecise in their finger placement. Intonation precision improved from 32.56 cents for sixth grade participants to 21.99 cents for eighth grade participants. These results are not surprising as young students are still developing the fine control over their motor skills necessary for precise finger placement. As with intonation error and interval error, there was a small but statistically significant difference in intonation precision between the normal and masked conditions of 4.76 cents. Consistent with previous studies, masking auditory feedback resulted in a slight decrease of intonation precision (Beck et al., 2017; Chen et al., 2008).

Interval Precision

As with intonation precision, I used the standard deviation of the signed interval errors as a measure of interval precision. In general, interval precision was quite poor ($M = 38.46$). This indicates that the participants' performances varied over a third of a semitone and suggests that participants struggled to maintain consistent finger spacing. The mean difference between interval precision under normal and masked conditions was 3 cents, a small but significant difference. The largest difference between normal and masked conditions was related to private lessons. Participants who took lessons demonstrated precision values of 26.22 cents whereas participants who did not take lessons showed vales of 42.94 cents, a difference of over 15 cents. Interval error and precision may have reflected a tendency of many students to perform C# and G# instead of C-natural and G-natural in the second octave of the G-major scale. Within the scale, the second finger changes positions relative to the first and third fingers (see Figure 2). One of the most common errors of young performers when playing this scale is maintaining identical finger spacings on all four strings.

Discussion of Research Questions

Research Question 1

Research Question 1 asked what the correlations were among pitch discrimination threshold and the performance variables under normal and masked auditory feedback conditions. Results from this study indicated a significant, positive, moderate correlation between pitch discrimination threshold and intonation error under normal conditions (*r* = .35). This result differs from that of Yarbrough et al. (1995) and Yarbrough et al. (1997) who found no correlation between pitch discrimination and intonation. The correlation is weaker than the result found by Hopkins (2015) which may have been due to the inclusion of participants from multiple grade levels instead of a single grade. The correlation between pitch discrimination threshold and intonation under masked conditions was significant and weak (*r* = .21) in comparison to the correlation between pitch discrimination threshold and intonation under normal conditions. This indicates a stronger relationship between perception and intonation with auditory feedback than without auditory feedback, which was to be expected.

The correlations between error and precision under normal and masked conditions revealed a surprising result. Under normal conditions, the correlations between intonation error and intonation precision and between interval error and interval precision were .64 and .69 respectively. However, under masked conditions, the respective correlations were nearly perfect (*r* = .97 and .96 respectively). These relationships were not explored in previous research. It is possible that participants made fewer corrective adjustments in the absence of auditory feedback which may have resulted in more consistency between error and precision.

Research Question 2

Results from a hierarchical regression model revealed the extent to which pitch discrimination threshold, intonation error under masked conditions, and student characteristics explain intonation error under normal conditions. In the first model, pitch discrimination threshold was a significant predictor of intonation error under normal conditions and explained 12% of the variance. Addition of intonation error under masked conditions to the model resulted in a 37% increase in R^2, a significant improvement to the model. There were no significant nonlinear relationships between pitch discrimination threshold and intonation under normal conditions or between intonation error under masked conditions and intonation error under normal conditions.

I tested for an interaction effect between pitch discrimination and intonation under masked conditions. It was possible that differences in pitch discrimination levels might have unevenly influenced the relationship between intonation under masked conditions and intonation under normal conditions. However, the interaction term was not significant.

Lastly, I added a group of student characteristics to the model (years of experience, grade, handedness, use of finger placement markers, private lessons, and weekly practice time). Together, the addition of these characteristics resulted in a significant but small (7%) improvement in the model. Pitch discrimination threshold and intonation error under masked conditions remained significant predictors of intonation error under normal conditions. Among the student characteristics, only the use of finger placement markers was a significant (p = .048), although weak, predictor of intonation error under normal conditions when controlling for all other variables in the model. Conversely, neither years of experience, grade, handedness, private lessons, nor weekly practice time were significant predictors of intonation error under normal conditions when controlling for pitch discrimination threshold and intonation error under masked conditions. The lack of significance of most of the student characteristics is surprising. Previous research has found significant differences in intonation according to school grade or years of experience (Geringer, 1983; Yarbrough et al., 1995) and taking private lessons (Morrison, 2000; Yarbrough et al., 1997). Moreover, there were consistent trends within the means of each of the performance variables than indicated improvements in error and precision according to grade, right-handedness, and taking private lessons (see Tables 12-15). The lack of difference in intonation error due to weekly practice time also seems counterintuitive.

The results of this regression model are consistent with previous research that found intonation error under masked conditions was a stronger predictor of intonation error under normal conditions than pitch discrimination threshold (Pfordresher & Brown, 2007). Previous research has approached this comparison by grouping participants according to scores on the perception task and then using a series of ANOVAs to compare intonation error among the groups (Demorest 2001; Demorest & Clements, 2007; He & Zhang, 2017; Pfordresher & Brown, 2007). However, I could find no previous research that included both pitch discrimination threshold, intonation error under masked conditions, and student characteristics in a single model. The direct comparison amongst the independent variables supports and extends findings from the previous research.

Research Question 3

Research Question 3 examined whether intonation error or interval error differed according to the finger(s) used to produce the pitches or the musical direction of the scale when the pitches or intervals were performed. I used a regression model with student-fixed effects, and results for intonation error indicated that the second finger was, on average, 12.11 cents less accurate than first finger and 9 cents less accurate than third finger. First finger pitches were slightly more accurate (2 cents) than third finger pitches. During the performance of the 2-octave G-major scale, the second finger changes positions with respect to first and third fingers. I expected the second finger to be less accurate than first and third fingers and was surprised the difference in error between the fingers wasn’t greater. The results are limited in that pitches performed with fourth fingers weren’t included in the model. Previous research (Baader et al., 2005) and practical experience indicate that the fourth finger is weaker and potentially less accurate than the other three fingers.

I also examined interval error using a regression model with student fixed-effects. The model included the finger pair used to perform intervals (first and second fingers or second and third fingers), the size of the interval (1 or 2 semitones), and the direction of the interval (ascending or descending). Finger pair, size, and direction were all significant predictors of interval error. On average, participants performed whole steps 6.5 cents more accurately than half steps. Differences by finger pair and direction were significant but less than 3 cents. This analysis was limited by only two sizes of intervals as well as the absence of intervals that involved fourth fingers. The results are informative, but they provide a very limited description of interval accuracy.

Support for a Sensorimotor Explanation of Intonation

Do the results from the current study support Pfordresher and Brown’s (2007) conclusion that sensorimotor skills offer a better explanation of intonation than perception, motor skills, or memory? My answer is a qualified yes. The correlation between pitch discrimination threshold and intonation under normal conditions was moderate (*r* = .35), and the regression analysis results indicated that pitch discrimination threshold explained approximately 12% of the variance in intonation error under normal conditions. I did not test motor skills apart from the performance tasks; however, all participants appeared to have the ability to place their fingers anywhere along the fingerboard in first position. Like the vocalists in Pfordresher and Brown's (2007) study, the participants in the current study appeared to have the necessary motor skills to produce each pitch in the performance task. They were less able to place their fingers accurately or consistently. With respect to memory, all participants were able to play the G-major scale without need of musical notation. Each school engaged students in performing scales as part of their daily technique-building routines.

Consistent with research in sensorimotor integration, performance accuracy under masked conditions was the strongest predictor in the regression analysis. It explained 37% of the variance of intonation error under normal conditions, had an effect size of .55 and a coefficient of .65. Moreover, the difference between mean intonation error scores in normal and masked conditions was 3.7 cents, a difference much lower than the mean pitch discrimination threshold for the participants of this study. Collectively, these results indicate that masking auditory feedback had minimal impact upon performance accuracy. Researchers of sensorimotor integration have interpreted similar findings as strong support for a sensorimotor explanation of intonation and for the existence of forward models. The results of the current study do support a sensorimotor explanation of intonation and the presence of forward models, but they also yield many questions that cause me to qualify this assertion.

Feedback Models in Musical Performance

Music education pedagogues have emphasized the importance of accurate pitch discrimination to performing with good intonation. This emphasis reveals an assumption that performers actively engage auditory feedback models to guide their performance. Feedback models explain the relationship between motor skills and perceptual feedback as separate entities within a stimulus-response chain (Schmidt et al., 2019). The performer requires the sensory feedback from the execution of a given motor movement or motor sequence in order to plan and execute subsequent movements. According to the feedback model, the absence of sensory feedback should inhibit performance. Feedback models also allow the performer to compare the auditory feedback from the results of motor movements to an expected outcome for the purposes of error detection. The expected outcome may be either an external reference pitch such as a tuner or another musician, or an internal, auditory model of the desired outcome. In either case, feedback models assume the performer relies on auditory feedback to guide and execute subsequent actions (Brown, 2013; Maes et al., 2014; Pfordresher, 2019).

The results from this study and from sensorimotor research in general indicate that performers do not require auditory feedback to execute the motor movements involved in musical performance. Chen et al. (2008, 2013) and Beck et al. (2017) concluded that string players and vocalists may rely more on auditory feedback for the micro adjustments necessary for intonation, but differences between performance with and without auditory feedback were relatively small. Similarly, differences in performance between normal and masked auditory feedback conditions in the current study were statistically significant but less than 5 cents for all performance variables.

Forward Models in Musical Performance

To account for this phenomenon, cognitive psychologists have proposed the existence of forward models based on theories of sensorimotor integration (Maes et al., 2014; Wolpert et al., 1995). Sensorimotor associations form when the performer associates planned motor movements with desired sensory feedback (Pfordresher, 2019; Wolpert et al., 1995). Once these associations are formed, forward models describe the performer’s ability to plan and execute motor movements based solely on the prediction of the desired sensory feedback. In other words, by predicting an intended sensory outcome, the performer activates and can execute the motor commands necessary to produce that outcome even if the expected sensory feedback is not received. Forward models account for the ability to execute accurate motor commands in the absence of auditory feedback and in the presence of auditory feedback when use of a feedback loop would be too slow to guide performance (Maes et al., 2014; Pfordresher, 2019).

Results of the current study support the existence of forward models as evidenced by relatively small differences between performance under normal and masked auditory feedback conditions, a moderate correlation between pitch discrimination threshold and intonation error under normal conditions, and regression results that indicate intonation error under masked conditions was a stronger prediction of intonation error under normal conditions than pitch discrimination threshold.

The current study focused on auditory-motor integration. However, performers engage multiple forms of sensory feedback during musical performance. Some participants looked at their left-hand fingers while performing which yielded visual feedback regarding the placement of their fingers. All participants received some form of haptic feedback as they felt the instrument and the contact of their left-hand fingers with the strings. Similarly, all participants were received some form of proprioceptive feedback regarding the awareness of their body in space. Thus, participants could have engaged forms of sensorimotor integration other than auditory-motor integration to execute the performance tasks. However, Chen et al. (2013) noted that despite the presence of multiple forms of sensory feedback, auditory-motor integration appeared to have the strongest influence on performance accuracy.

Forward models developed through auditory-motor integration assume the performer can predict the desired auditory outcome accurately and chooses to do so during performance. This reflects Gordon’s (2007) concept of audiation in which an individual can mentally “hear” sound in the absence of physical sound. For students to form accurate predictions of expected auditory outcomes, they must be able to audiate the desired musical outcome accurately.

Secondly, assuming students can audiate the desired outcome accurately, an auditory forward model explanation assumes that the performer engages in audiation of the desired outcome while performing. I did not ask participants if they were audiating, or hearing the scale in their heads while performing, nor did I direct participants to do so. Consequently, the results of the current study do not reflect this distinction. Morrison and Fyk (2000) suggested that students in the early years of instruction may be too overwhelmed by motor skill demands of instrumental performance to focus on intonation. While this is highly likely when learning new performance techniques, the participants of the current study play scales daily in their orchestra classes. They did not appear to struggle with the performance task to an extent that would suggest an inability to focus on their intonation.

If participants were able to audiate the scale accurately, and they were actively doing so while performing, then auditory-motor integration would be the best explanation for intonation error. Intonation error would likely be due to sensorimotor mismapping, or inaccurate associations between the desired outcome and the motor skills necessary to achieve that outcome (He & Zhang, 2017; Pfordresher & Brown, 2007). Consequently, the formation of accurate auditory-motor mappings yields important implications for pedagogy.

Implications for Pedagogy

In his book, *Sound and Action in Music Performance,* Pfordresher (2019) explained that development of expertise involves the continual refinement of sensorimotor skills. Sensorimotor skills form during learning as the individual associates planned motor movements with intended aural outcomes (Maes et al., 2014; Pfordresher, 2019). If students are to develop accurate associations, they must know the intended aural outcomes. This supports the use of aural-based pedagogies such as the Suzuki Method, Music Learning Theory, Orff and Kodály all of which focus on guiding students to develop strong aural skills. Music Learning Theory's emphasis on audiation, the ability to hear music when sound is not physically present, is particularly important. Ideally, when learning to play a string instrument, the student compares the auditory feedback resulting from the performance to an ideal version of sound they are trying to create. The comparison requires either that the student perform with an accurate model (e.g. with a teacher or a recording) or that the student audiates an accurate model while performing. Teachers can support students' audiation skills by incorporating modeling, listening, and singing activities throughout each rehearsal. Consistently providing aural models for students may help students develop a strong concept of the goals for their own performance.

For auditory-motor associations to develop, teachers should address motor skills as a means of realizing the aural goals of performance. The complexity of motor skills required to play a string instrument can easily lead teachers to approach the execution of correct motor skill movements as a goal in and of itself. For example, it is often simpler in the short-term to correct string players' intonation by reminding them of the proper finger pattern or directing them to adjust their fingers towards or away from the bridge. In contrast, modeling or asking students to sing or audiate the troublesome pitches prior to offering specific motor-skill instruction reinforces the aural goal of the performance. Instrument position and correct movements are essential to string instrument performance but only because they allow the performer to create a desired musical outcome. Ultimately, if students are to develop accurate auditory-motor associations, the motor skills they learn must be focused toward realizing aural goals.

Sensorimotor scholars have proposed forward models as an explanation of how musicians can perform accurately when auditory feedback is not present. Forward models explain a process by which the performer anticipates the aural outcome of the performance. This anticipation activates the motor skill programs necessary to create the desired outcome. Teachers can help students engage forward models by asking students to audiate or sing each note in their heads before performing it. This may help students maintain their focus on the sound of the performance and lead to fewer performance errors.

A sensorimotor perspective of string instrument learning lends itself well towards inquiry or problem-based learning approaches in the performance classroom. Teachers help students select, develop, and refine their aural goals and then guide the development of motor skills to help students achieve their goals. Such an approach may also support the development of musical independence as students' abilities to set goals and self-correct their performances increase.

Limitations

Results of the current study should be interpreted considering the following limitations. The performance task included the 2-octave G-major scale and the 1-octave D-major scale in melodic thirds; however, I was unable to include the results from D-major melodic thirds in the analysis. The D-major melodic thirds exercise included two additional interval sizes as well as intervals performed between non-adjacent fingers. Consequently, inclusion of the data from the D-major melodic thirds exercises would have provided more nuanced results.

The pitches and intervals analyzed in the current study did not include those performed with a fourth (pinky) finger (D4, A4, and E5). As is common among young string players, the participants in the current study used a combination of fourth fingers and open strings. The fourth finger is the weakest, and likely least accurate finger. In contrast, the open strings were carefully tuned. A mixture of open and fourth-fingered pitches likely would have resulted in lower error values than if all pitches were performed with the fourth finger. I chose to omit the pitches that could be performed with the fourth finger or an open string from the analysis. Use or nonuse of the fourth finger might have affected the placement accuracy of the other fingers; however, results from Research Question 3 indicated the spacing between first and third fingers remained consistent despite changes in the placement of the second finger (see Figure 2). This provides some indication that the placement accuracy of one finger may not substantively affect the accuracy of the adjacent fingers. Future research with more experienced students and a stronger emphasis on the use of fourth fingers during performance may allow for an examination of fourth-finger accuracy.

As previously discussed, the use or nonuse of FPMs presented a threat to validity in the current study because FPMs provide visual and tactile guidance for finger placement. I provided instruments without FPMs for the participants to play and allowed each participant a practice trial of the performance excerpts. It is possible that the 42% of participants who used FPMs on their personal instruments found the experience more challenging than the 58% of participants accustomed to performing without FPMs. Overall, participants who used FPMs demonstrated lower accuracy and lower precision than participants who did not use FPMs. Future research should further examine the relationship between FPM use and intonation from an auditory-motor perspective. Specifically, do FPMs inhibit the development of auditory-motor integration with respect to intonation?

I asked participants to perform each exercise in the performance task once. In many studies of sensorimotor integration, participants performed the study exercises multiple times (Beck et al., 2017; Chen et al., 2008; Pfordresher, 2005). As indicated by the results for precision in the current study, the participants demonstrated high levels of variability in their performances. Recording multiple performances of each exercise under both feedback conditions may have yielded more accurate measures of the performance variables. The data collection process took an average of 15 minutes per participant. Due to time constraints, I was unable to obtain multiple recordings for each participant.

Conclusion and Suggestions for Future Research

Intonation is a demanding skill for string players who must discriminate minute differences in pitch and coordinate precise left-hand finger placement while producing a good tone with the bow. Unsurprisingly, intonation occupies a prominent place in pedagogical texts (Flesch, 1924; Galamian; 1962; Green, 1966; Hopkins, 2019; Rolland & Mutschler, 2007) and curricula (Benham et al., 2011). Efforts to understand intonation and that which influences accuracy in performance have led to a developing body of research in music education (Demorest, 2001; Demorest & Clements, 2007; Geringer 1978, 1983; Geringer et al., 2012; Geringer et al., 2014; Hopkins, 2014, 2015; Morrison, 2000; Yarbrough et al., 1995; Yarbrough et al., 1997).

The current study contributes to and extends this body of research in music education by using sensorimotor integration as a theoretical framework to examine intonation in the performance of young string players. While sensorimotor integration has been examined considerably by cognitive psychologists (Beck et al., 2017; Brown, 2013; Chen et al., 2008, 2013; Finney, 1997; He & Zhang, 2017; Pfordresher, 2003, 2005, 2019; Pfordresher & Brown, 2007), I know of no previous research that has employed this perspective in music education.

Consideration of intonation as a sensorimotor skill opens many additional possibilities for future research. Methodological approaches used to examine sensorimotor integration compare differences in performance under different feedback conditions. The current study examined only differences between conditions of normal and masked auditory feedback. Other research has examined conditions of altered feedback (Finney, 1997; Pfordresher, 2005) as well as performance with an accurate auditory model (He & Zhang, 2017; Morrison, 2000; Pfordresher & Brown, 2007). More research that involves comparison of intonation accuracy under multiple auditory feedback conditions would provide a more nuanced perspective of sensorimotor integration in musical performance.

Results from the current study support the existence of forward models for students with as little as one year of experience. However, many questions remain regarding if, and to what extent, students use feedback or forward models in performance. Do students have an accurate aural image of the goal of their performance? If so, are they thinking about it or audiating during their performance? In the current study, I purposefully did not direct participants to hear the scale in their heads while they performed. Research in motor skills (Duke et al., 2011; Magill & Anderson, 2016; Schmidt et al., 2019; Wulf, 2013) has consistently shown that motor skill accuracy improves when the performer is attending to the goal of the motion rather than motion itself. Future research should examine the effect of asking students to audiate, or hear the next pitch in their heads, before performing the pitch. Would intonation improve, and would it improve equally under normal and masked auditory feedback conditions?

Future research should also examine sensorimotor integration in participants with a wider range of experiences. The current study addressed the performance of middle school violinists. Studies with violinists of higher levels of expertise may help to explain the development of sensorimotor skills over time and the relationship between sensorimotor integration and the acquisition of expertise. This would require careful selection of performance tasks including familiar exercises (e.g. scales, arpeggios), musical excerpts, sight-reading, and imitation of musical patterns (playing by ear) under a variety of feedback conditions.

In addition to studies with participants of a wider range of experience, future research should also engage violists, cellists, and bassists. Hopkins (2014) found that participants’ pitch discrimination thresholds were lower (more accurate) for the frequencies of the violin and viola open strings than those of the cello and bass strings. Furthermore, during performance, the physical distance between the musician’s ears and the cello or bass is much greater than the physical distance between the musician’s ears and the violin and viola. This may make it more challenging for performers to distinguish their sounds while performing in an ensemble setting; yet school string instruction occurs primarily in ensemble settings. Future research should address the relationships among pitch discrimination and intonation under different auditory feedback conditions for each string instrument and then across string instruments to yield a more nuanced understanding of sensorimotor integration in string performance.

Intonation is challenging to learn and extremely challenging to teach. Results from the current study suggest the need to examine how teaching strategies support the formation of accurate sensorimotor associations. How can teachers encourage students to use and attend to auditory feedback in their performance in ways that may lead to more accurate associations between perception and action? Similarly, how can teachers address motor skill development while simultaneously encouraging students to anticipate the sound they are trying to create by using those skills? Examining and teaching intonation as a sensorimotor skill may provide teachers with effective approaches to support the intonation development of their students.

APPENDICIES

APPENDIX A

Student Musical Background Questionnaire

Student Number: __________

Grade: 6 7 8

Current Age: _________

Gender: __________

Race/Ethnicity:

White Black or African American Asian

Native Hawaiian or Pacific Islander American Indian or Alaska Native

Hispanic or Latino Other ______________________

Are you right-handed or left-handed? Right Left

Circle the grade you were in when you started playing the violin.

Pre-K K 1 2 3 4 5 6 7 8

Do you (or have you in the past) take private lessons on the violin? Yes No

If yes, circle the grades you were in when you took lessons?

Pre-K K 1 2 3 4 5 6 7 8

About how much time do you practice your violin ***outside of school*** in a typical week?

_______ hours _______ minutes

Does your own violin have finger dots or tapes? Yes No

APPENDIX B

Performance Task Material

Figure 4

G-Major Scale, 2 Octaves

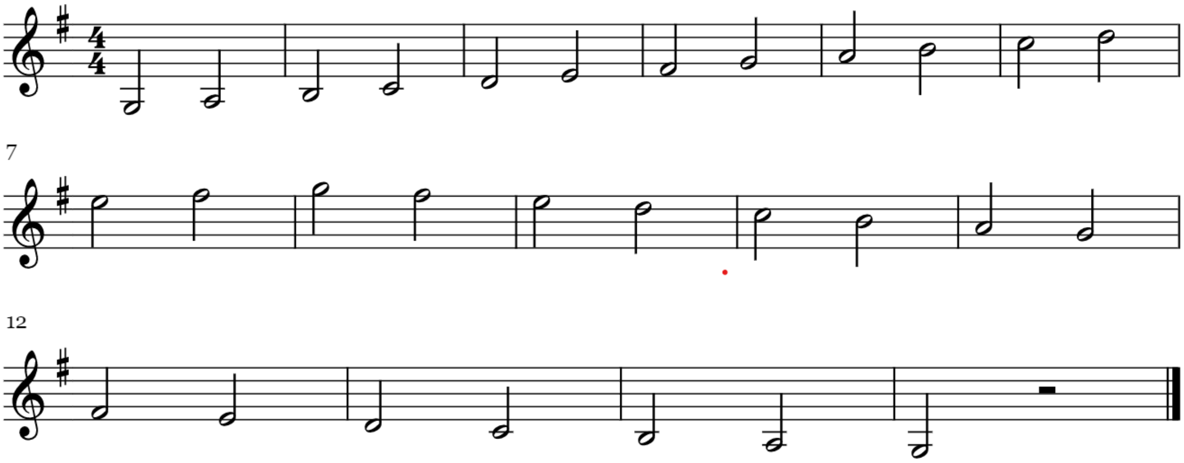

Figure 5

D-Major Melodic Thirds, 1 Octave
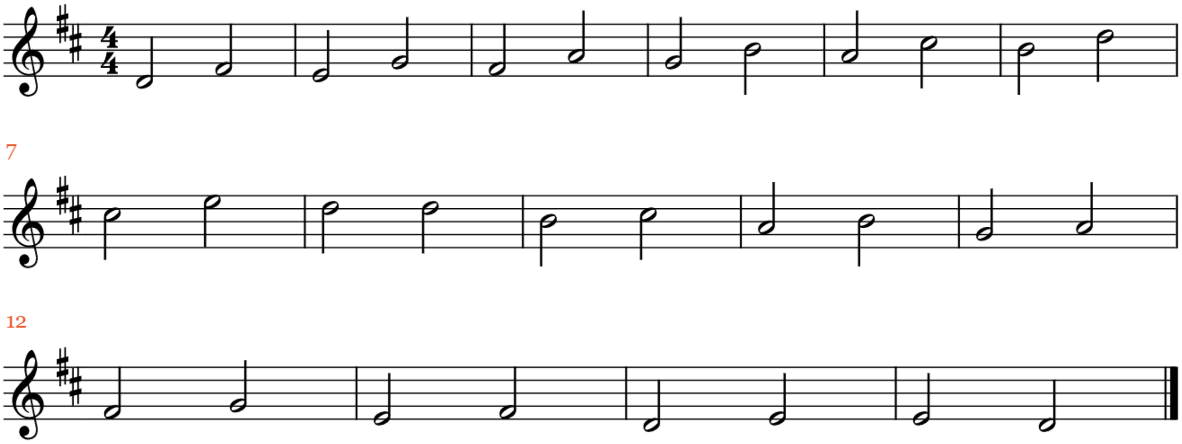
APPENDIX C

Equal Temperament Frequency Values

Table 20 shows the equal temperament reference frequencies for each pitch analyzed in this study. These values are based on a standard of A = 440 Hz.

Table 20

Equal Temperament Frequency Values

Pitch	Frequency
G3	196
A3	220
B3	246.94
C4	261.63
D4	293.70
E4	329.63
F#4	369.99
G4	392
A4	440
B4	493.88
C5	523.25
D5	587.33
E5	659.30
F#5	739.98
G5	783.99

REFERENCES

Acock, A. C. (2016). *A gentle introduction to Stata* (5th ed.). Stata Press.

Allen, M., Gillespie, R., Tellejohn Hayes, P. (2002). *Essential elements for strings: Book 1.* Hal Leonard.

Ancillao, A., Savastano, B., Galli, M., Albertini, G. (2017). Three dimensional motion applied to violin playing: A study on feasibility and characterization of the motor strategy. *Computer Methods and Programs in Biomedicine, 149,* 19-27. https://doi.org/10.1016/j.cmpb.2017.07.005

American Orff-Schulwerk Association. (2020). *What is Orff-Schulwerk?* https://aosa.org/about/what-is-orff-schulwerk/

Baader, A.P., Kazennikov, O., & Wiesendanger, M. (2005). Coordination of bowing and fingering in violin playing. *Cognitive Brain Research, 23*(2-3), 436-443. https://doi.org/10.1016/j.cogbrainres.2004.11.008

Baumann, S., Koeneke, S., Meyer, M., Lutz, K. & Jancke, L. (2005). A network for sensory-motor integration: What happens in the auditory cortex during piano playing without acoustic feedback? *Annals of the New York Academy of Sciences, 1060*(1), 186-188. https://doi.org/10.1196/annals.1360.038

Beck, S. L., Rieser, J. J., & Erdemir, A. (2017). Singing without hearing: A comparative study of children and adults singing a familiar tune. *Psychomusicology: Music, Mind, and Brain, 27*(2), 122-131. https://doi.org/10.1037/pmu0000176

Benham, S. J., Wagner, M. L., Aten, J. L., Evan, J. P., Odegaard, D., & Lieberman, J. L. (2011). *ASTA string curriculum*. American String Teachers Association.

Bergonzi, L. (1997). Effects of finger markers and harmonic context on performance of beginning string students. *Journal of Research in Music Education, 45*(2), 197-211. https://doi.org/10.2307/3345580

Boersma, P., & Weenink, D. (2019). *Praat: Doing phonetics by computer* (Version 6.1.04) [Computer software]. http://www.praat.org/

Brannen, M. E. (2015). Using kinesthetic strategies to achieve better intonation with upper strings. *Music Educators Journal, 102*(2), 19-21. https://doi.org/10.1177/0027432115616578

Brown, R. M. (2013). *Auditory-motor integration in music performance, learning, and memory.* [Doctoral dissertation, McGill University]. eScholarship@McGill. https://escholarship.mcgill.ca/concern/theses/9019s585z

Buss, E., Flahery, M. M., & Leibold, L. L. (2017). Development of frequency discrimination at 250 Hz is similar for tone and /ba/ stimuli**.** *The Journal of the Acoustical Society of America 142*(1), 150-154. https://doi.org/10.1121/1.4994687

Chen, J., Woollacott, M. H., Pologie, S., & Moore, G. P. (2008). Pitch and space maps of skilled cellists: accuracy, variability, and error correction. *Experimental Brain Research, 188*, 493-503. https://doi.org/10.1007/s00221-008-1380-2

Chen, J., Woollacott, M. H., Pologie, S., & Moore, G. P. (2013). Stochastic aspects of motor behavior and their dependence on auditory feedback in experienced cellists. *Frontiers in Human Neuroscience, 7*, 1-8. https://doi.org/10.3389/fnhum.2013.00419

Cotik, T. (2019). Concepts of the Alexander Technique and practical ideas for musicians. *American String Teacher*, *69*(2), 33-36. https://doi.org/10.1177/0003131319835543

Dawes, P. & Bishop, D. V. M. (2008). Maturation of visual and auditory temporal processing in school-aged children. *Journal of Speech, Language, and Hearing Research, 51*(4), 1002-1015. https://doi.org/10.1044/1092-4388(2008/073)

Dell, C. D. (2003). *Singing and tonal pattern effects on beginning string students' intonation skills.* (Publication No. 3084778) [Doctoral dissertation, University of South Carolina]. ProQuest Dissertations and Theses Global.

Demorest, S. M. (2001). Pitch-matching performance of junior high boys: A comparison of perception and production. *Bulletin of the Council for Research in Music Education*, *151*(Winter), 63–70. www.jstor.org/stable/40319118

Demorest, S. M., & Clements, A. (2007). Factors influencing the pitch-matching of junior high boys. *Journal of Research in Music Education*, *55*(3), 190–203. http://doi.org/10.1177/002242940705500302

Donders, F. C. (1969). On the speed of mental processes. *Acta Psychologica, 30,* 412-431. https://doi.org/10.1016/0001-6918(69)90065-1

Duke, R. A., Cash, C. D., & Allen, S. E. (2011). Focus of attention affects performance of motor skills in music. *Journal of Research in Music Education 59*(1), 44-55. https://doi.org/10.1177/0022429410396093

Elpus, K., & Abril, C. R. (2011). High school music ensemble students in the United States: A demographic profile. *Journal of Research in Music Education, 59*(2), 128-145. https://doi.org/10.1177/0022429411405207

Engel, A., Bangert, M., Horbank, D., Hijmans, B. S., Wilkens, K., Keller, P. E., Keysers, C. (2012). Learning piano melodies in visuo-motor or audio-motor training conditions and the neural correlates of their cross-modal transfer. *NeuroImage, 63*(2), 966-978. https://doi.org/10.1016/j.neuroimage.2012.03.038

Faul, F., Erdfelder, E., Buchner, A., & Lang, A. G. (2009). Statistical power analyses using G*Power 3.1: Tests for correlation and regression analyses. *Behavior Research Methods, 41*, 1149-1160. https://doi.org/10.3758/BRM.41.4.1149

Fancourt, A., Dick, F., & Steward, L. (2013). Pitch-change detection and pitch-direction discrimination in children. *Psychomusicology: Music, Mind, and Brain*, *23*, 73–81. https://doi.org/10.1037/a0033301

Finney, S. A. (1997). Auditory feedback and musical keyboard performance. *Music Perception, 15*(2), 153-174. https://doi.org/10.2307/40285747

Finney, S. A., & Palmer, C. (2003). Auditory feedback and memory for music performance: Sound evidence for an encoding effect. *Memory and Cognition, 31*, 51-64. https://doi.org/10.3758/BF03196082

Fitts, P. M. (1954). The information capacity of the human motor system in controlling amplitude of movement. *Journal of Experimental Psychology, 47*(3), 381-391. https://doi.org/10.1037//0096-3445.121.3.262

Fitts, P. M., & Posner, M. I. (1967). *Human performance.* Brooks/Cole.

Flesch, C. (1924). *The art of violin playing*. Carl Fischer.

Furuya, S., Nakamura, A., & Nagata, N. (2014). Acquisition of individuated finger movements through musical practice. *Neuroscience, 275*, 444-454. https://doi.org/10.1016/j.neuroscience.2014.06.031

Galamian, I. (1962). *Principles of Violin Playing and Teaching*. Prentice-Hall.

Geringer, J. M. (1978). Intonational performance and perception of ascending scales. *Journal of Research in Music Education*, *26*(1), 32–40. https://doi.org/10.2307/3344787

Geringer, J. M. (1983). The relationship of pitch-matching and pitch-discrimination abilities of preschool and fourth-grade students. *Journal of Research in Music Education*, *31*(2), 93–99. https://doi.org/10.2307/3345213

Geringer, J. M., MacLeod, R. B., & Ellis, J. C. (2014). Two studies of pitch in string instrument vibrato: Perception and pitch matching responses of university and high school string players. *International Journal of Music Education*, *32*(1), 19–30. https://doi.org/10.1177/0255761411433728

Geringer, J. M., MacLeod, R. B. & Sasanfar, J. K. (2012). High school string players' perception of violin, trumpet, and voice intonation. *String Research Journal*, *3*(1), 81-96. https://doi.org/10.1177/194849921200300106

Geringer, J. M., & Worthy, M. D. (1999). Effects of tone-quality changes on intonation and tone-quality ratings of high school and college instrumentalists. *Journal of Research in Music Education*, *47*(2), 135–149. https://doi.org/10.2307/3345719

Goebl, W., & Palmer, C. (2009). Synchronization of timing and motion among performing musicians. *Music Perception*, *26*(5), 427-438. https://doi.org/10.1525/mp.2009.26.5.427

Gordon, E. E. (2007). *Learning sequences in music: A contemporary music learning theory, 2007 edition.* GIA publications, Inc.

Green, E. A. H. (1966). *Teaching stringed instruments in classes.* Prentice-Hall.

Hamann, D. L., & Gillespie, R. (2018). *Strategies for teaching strings: Building a successful string and orchestra program.* Oxford University Press.

Haueisen, J., & Knösche, T. R. (2001). Involuntary motor activity in pianists evoked by music perception. *Journal of Cognitive Neuroscience, 13*(6), 786-792. https://doi.org/10.1162/08989290152541449

He, H., & Zhang, W. (2017). Sensorimotor mismapping in poor-pitch singing. *Journal of Voice, 31*(5), 645.e23–645.e32. https://doi.org/10.1016/j.jvoice.2017.02.018

Helmut (2018, October 30). *Why noise canceling headphones don't block voices and what you can do about it*. https://noisyworld.org/noise-cancelling-headphones-voices/#comments

Hommel, B., Müsseler, J., Aschersleben, G., & Prinz, W. (2001). The theory of event coding (TEC): A framework for perception and action planning. *Behavioral and Brain Sciences, 24*(5), 849–878. https://doi.org/10.1017/S0140525X01000103

Hopkins, M. T. (2012). Strategies for improving the intonation of your orchestra. *American String Teacher, 62*(4), 24-28. https://doi.org/10.1177/000313131206200404

Hopkins, M. T. (2014). Pilot-testing of new software for measuring string players' instrument tuning skills. *Journal of Music, Technology & Education, 7*(1), 5–21. https://doi.org/10.1386/jmte.7.1.5_1

Hopkins, M. T. (2015). Eighth-grade violinists' instrument tuning ability: A comparison of pitch perception and tuning accuracy. *Journal of Research in Music Education, 63*(3), 349-368. https://doi.org/10.1177/0022429415597884

Hopkins, M. T. (2019). *The art of string teaching*. GIA publications, Inc.

Howell, J. R., & Howell, F. C. (1989/2003). *Bornoff: Breakthrough for string education*. Newton Highlands, MA: Foundation for the Advancement of String Education.

Kajihara, T., Verdonschot, R. G., Sparks, J., & Stewart, L. (2013). Action-perception coupling in violinists. *Frontiers in Human Neuroscience, 7*(349), 1-6. https://doi.org/10.3389/fnhum.2013.00349

Kantorski, V. J. (1986). String instrument intonation in upper and lower registers: The effects of accompaniment. *Journal of Research in Music Education*, *34*(3), 200–210. https://doi.org/10.2307/3344749

Keller, T. A., & Cowan, N. (1994). Developmental increase in the duration of memory for tone pitch. *Developmental Psychology, 30*(6), 855-863. https://doi.org/10.1037/0012-1649.30.6.855

Kincaid, A. E., Duncan, S., & Scott, S. A. (2002). Assessment of fine motor skill in musicians and nonmusicians: Differences in timing versus sequence accuracy in a bimanual fingering task. *Perceptual and Motor Skills, 95*(1), 245-257. https://doi.org/10.2466/pms.2002.95.1.245

Kinoshita, H., & Obata, S. (2009). Left hand finger force in violin playing: Tempo, loudness, and finger differences. *The Journal of the Acoustical Society of America*, *126*(1), 388-395. https://doi.org/10.1121/1.3139908

Klein, S. (2013). Practicing in tune: Four puzzlers for four concepts. *American String Teacher, 63* (4), 30-35. https://doi.org/10.1177/000313131306300407

Konczak, J., vander Velden, H., & Jaeger, L. (2009). Learning to play the violin: Motor control by freezing, not freeing degrees of freedom. *Journal of Motor Behavior*, *41*(3), 243-252. https://doi.org/10.3200/JMBR.41.3.243-252

Kopiez, R., Jabusch, H., Galley, N., Homann, J., Lehmann, A. C., & Altenmuller, E. (2011). No disadvantage for left-handed musicians: The relationship between handedness, perceived constraints and performance-related skills in string players and pianists. *Psychology of Music, 40*(3), 357-384. https://doi.org/10.1177/0305735610394708

.Maes, P., Leman, M., Palmer, C., & Wanderley, M. M. (2014). Action-based effects on music perception. *Frontiers in Psychology*, *4*, 1-14. https://doi.org/10.3389/psyg.2013.01008

Magill, R. A., & Anderson, D. (2016). *Motor learning and control: Concepts and applications (11th ed.)*. McGraw-Hill.

Mongeon, J. (2004). *The effects of left-hand exercises on beginning upper string performers' intonation and facility*. (Publication No. 3125347) [Doctoral dissertation, University of Miami]. ProQuest Dissertations and Theses Global.

Morrison, S. J. (2000). Effect of melodic context on tuning behaviors, and experience on the intonation accuracy of wind players. *Journal of Research in Music Education, 48*(1), 39-51. https://doi.org/10.2307/3345455

Morrison, S. J., & Fyk. J. (2002). Intonation. In G. McPherson, & R. Parncutt (Eds.), *The science and psychology of music performance: Creative strategies for teaching and learning* (pp. 183–198). Oxford University Press.

Mürbe, D., Pabst, R., Hofmann, G., & Sundberg, J. (2002). Significance of auditory and kinesthetic feedback to singers' pitch control. *Journal of Voice, 16*(1), 44-51. https://doi.org/10.1016/S0892-1997(02)00071-1

National Council for Education Statistics (2020). *Core of common data: Search for public schools*. https://nces.ed.gov/ccd/schoolsearch

Organization of American Kodály Educators. (2020). *The Kodály concept.* https://www.oake.org/about-us/the-kodaly-concept/

Oxenham, A. J. (2015). The perception of musical tones. In D. Deutsch (Ed.), *The psychology of music development* (pp. 1-33). Academic Press.

Pfordresher, P. Q. (2003). Auditory feedback in music performance: Evidence for a dissociation of sequencing and timing. *Journal of Experimental Psychology: Human Perception and Performance, 29*(5), 949-964. https://doi.org/10.1037/0096-1523.29.5.949

Pfordresher, P. Q. (2005). Auditory feedback in music performance: The role of melodic structure and musical skill. *Journal of Experimental Psychology: Human Perception and Performance, 31*(6), 1331-1345. https://doi.org/10.1037/0096-1523.31.6.1331

Pfordresher, P. Q. (2019). *Sound and action in music performance.* Academic Press.

Pfordresher, P. Q., & Brown, S. (2007). Poor-pitch singing in the absence of "tone deafness." *Music Perception, 25*(2), 95-115. https://doi.org/10.1525/MP.2007.25.2.95

Phillips, B., Boonshaft, P., & Sheldon, R. (2010). *Sound innovations for string orchestra: A revolutionary method for beginning musicians.* Alfred.

Rolland, P., & Mutschler, M. (2007). *The teaching of action in string playing: Developmental and remedial techniques.* American String Teachers Association.

Salzberg, R. S. (1980). The effects of visual stimulus and instruction on intonation accuracy of string instrumentalists. *Psychology of Music, 8*(2), 42–49. https://doi.org/10.1177/030573568082005

Salzberg, R. S., & Salzberg, C. L. (1981). Praise and corrective feedback in the remediation of incorrect left-hand positions of elementary string players. *Journal of Research in Music Education, 29*(2), 125–133. https://doi.org/10.2307/3345021

Schlegel, A. L., & Springer, D. G. (2018). Effects of accurate and inaccurate visual feedback on the tuning accuracy of high school and college trombonists. *International Journal of Music Education, 36*(3), 394-406. https://doi.org/10.1177/0255761418763914

Scheerer, N. E., & Jones, J. A. (2012). The relationship between vocal accuracy and variability to the level of compensation to altered auditory feedback. *Neuroscience Letters, 529*(2), 128-132. https://doi.org/10.1016/j.neulet.2012.09.012

Schmidt, R. A., Lee, T. D., Winstein, C. J., Wulf, G. W., & Zelaznik, H. N. (2019). *Motor control and learning: A behavioral emphasis* (6th ed.). Human Kinetics.

Smith, B. P., Mick, J. P., & Alexander, M. L. (2018). The status of strings and orchestra programs in U.S. schools. *String Research Journal, 8*(1), 15-31. https://doi.org/10.1177/1948499218769607

Smith, C. M. (1995). Development of performance pitch accuracy of string students. *Bulletin of the Council for Research in Music Education, 124*(Spring), 13–23. https://www.jstor.org/stable/40318702

Sogin, D. W. (1989). An analysis of string instrumentalists performed intonational adjustments within an ascending and descending pitch set. *Journal of Research in Music Education, 37*(2), 104–111. https://doi.org/10.2307/3344702

Sogin, D. W. (1997). An exploratory study on contingent verbal feedback for accuracy of intonation in musical performance. *Perceptual and Motor Skills, 84*(1), 217–218. https://doi.org/10.2466/pms.1997.84.1.217

Sternberg, S. (1969). The discovery of processing stages: Extensions of Donders' method. *Acta Psychologica, 30*, 276-315. https://doi.org/10.1016/0001-6918(69)90055-9

Suzuki, S., & Suzuki, W. (1983). *Nurtured by love: The classic approach to talent education.* Alfred.

Taylor, C. N., Buss, E., & Leibold, L. L. (2013). Factors affecting frequency discrimination in school-aged children and adults. *Proceedings of Meetings on Acoustics, 16*(1), 1-6. https://doi.org/10.1121/1.4798810

United States Department of Labor, Occupational Safety and Health Administration (2008). *Occupational safety and health standards no. 1910.95: Occupational noise exposure.* https://www.osha.gov/laws-regs/regulations/standardnumber/1910/1910.95

Watson, A. H. D. (2006). What can studying musicians tell us about motor control of the hand? *Journal of Anatomy, 208*(4), 527-542. https://doi.org/10.1111/j.1469-7580.2006.00545.x

Wollman, I., Penhune, V., Segado, M., Carpentier, T., & Zatorre, R. J. (2018). Neural network retuning and neural predictors of learning success associated with cello training. *Proceedings of the National Academy of Sciences of the United States of America, 115*(26), E6056 - E6064. https://doi.org/10.1073/pnas.1721414115

Wolpert, D. M., Ghahramani, Z., & Jordan, M. I. (1995). An internal model for sensorimotor integration. *Science, 269*(5232), 1880-1882. https://doi.org/10.1126/science.7569931

Wulf, G. (2013). Attentional focus and motor learning: a review of 15 years. *International Review of Sport and Exercise Psychology*, *6*(1), 77-104. https://doi.org/10.1080/1750984X.2012.723728

Yarbrough, C., Karrick, B., & Morrison, S. J. (1995). Effect of knowledge of directional mistunings on the tuning accuracy of beginning and intermediate wind players. *Journal of Research in Music Education, 43*(3), 232–241. https://doi.org/10.2307/3345638

Yarbrough, C., Morrison, S. J., & Karrick, B. (1997). The effect of experience, private instruction, and knowledge of directional mistunings on the tuning performance and perception of high school wind players. *Bulletin of the Council for Research in Music Education*, *134*(Fall), 31–42. www.jstor.org/stable/40318878

Zatorre, R. J., Chen, J. L., & Penhune, V. B. (2007). When the brain plays music: Auditory–motor interactions in music perception and production. *Nature Reviews Neuroscience, 8*(7), 547–558. https://doi.org/10.1038/nrn2152