ENGINEERING RESEARCH INSTITUTE
THE UNIVERSITY OF MICHIGAN
ANN ARBOR

Final Report

SHOCK ON ELECTRICAL COMPONENTS IN TRACK-LAYING AND WHEELED VEHICLES

H. S. Bull
J. Ormondroyd
H. Olson

Project 2145

DEPARTMENT OF THE ARMY, DETROIT ARSENAL
CONTRACT NO. DA-20-089-ORD-36543
CENTER LINE, MICHIGAN

October 1957

ensn

UMR0914

FOREWORD

The work described in this terminal report was done in the Department of Electrical Engineering of The University of Michigan under the supervision of Professor H. S. Bull.

Much of the material reported here represents the endeavor of H. Olson, who has devoted his full time to this program. The project has benefited from the expert counsel of Professor J. Ormondroyd of the Department of Engineering Mechanics, and that of Professor D. Ragone of the Department of Chemical and Metallurgical Engineering; and in addition the SAE Ordnance Lamp Subcommittee, and the companies represented by its members, have generously cooperated.

TABLE OF CONTENTS

LIST OF ILLUSTRATIONS.

LIST OF ILLUSTRATIONS (Concluded)

ABSTRACT

This is the terminal report for this project. The accomplishments may be summarized as follows:

1. A survey was made of previous work pertinent to the scope of this project. It was noted that the problem of maintaining lamps on service vehicles had been studied spasmodically over a considerable period of time.

2. The Arsenal impact tester was studied and a number of design modifications recommended. These changes made each of the six modified machines consistent, but only three produced uniform results.

3. A new and simple device to impact-test miniature incandescent lamps was designed, developed, and evaluated. This unit produced consistent results in numerous tests; and additional units, built for Ordnance suppliers, proved to be uniform on the basis of limited tests.

4. The properties of tungsten and their relationship to the lamp filament were investigated. These relationships were used in an effort to strengthen the type 2416 lamp. Effort was also applied to the strengthening of the type 1251 lamp, which was especially vulnerable to shock and vibration. A lamp of this type, with a filament that can stand the severest laboratory test, is now ready for regular use.

5. The basic design for an impact tester of automotive type PAR lamps was shown to be feasible. A pilot model gave good results in laboratory tests.

6. The feasibility of an impact-test unit for lighting equipment was evaluated.

7. The procedure for impact-testing miniature incandescent lamps on the rotary-drum tester was developed.

OBJECTIVE

The objectives of this research project were:

1. To study the Arsenal type impact tester and to determine practicable means of improving the tester and correlating the test results obtained from the testers now in service;

2. to design, develop, and evaluate a new impact tester for miniature lamps;

3. to study presently accepted methods of impact-testing vehicular lamps and to determine specifications governing such tests;

4. to determine practicable ways to increase the operating life of incandescent lamps used on military vehicles, particularly with reference to their resistance to shock and vibration; and

5. to determine the feasibility of testers for PAR type automotive lamps and lighting equipment.

I. HISTORICAL BACKGROUND AND WORK PRECEDING THE PROJECT

A. GROWTH OF ELECTRICAL POWER REQUIREMENTS OF VEHICLES

For nearly fifteen years the Army Ordnance Corps and the lamp manufacturers have been disturbed by the short life of many of the lamp types used on military vehicles. During this period the amount of electrical equipment needed on these vehicles has increased progressively, necessitating similar increases in battery and generator capacity. The practical limits of successful operation at 6 volts were soon exceeded, and it became necessary to redesign the electrical components for 12-volt operation. More recently the voltage has been raised to 28 volts. The redesign of the lamp filament structure for these higher voltages necessitated the use of smaller diameter wire. It thus became increasingly difficult to make the filament structure capable of withstanding the vibration and road shock accompanying the operation of the vehicle.

B. SAE COMMITTEE FORMATION

In recognition of the seriousness of this situation, the Society of Automotive Engineers (SAE) Lighting Committee, in collaboration with Army Ordnance, lamp manufacturers, and other interested parties, established a subcommittee to study the problem and to initiate research covering its various phases. The principal work reported either directly or indirectly to this subcommittee will be reviewed in the following sections.

C. ACTIVITIES OF COMMERCIAL AND GOVERNMENTAL AGENCIES

Various agencies have studied different phases of the problem of sho t lamp life. Their efforts can be summarized conveniently under the following categories: studies of lamp shock mounting, studies of critical frequencies, studies of lamp performance, and structural changes of filament mounts.

1. Study of Shock Mounting.—Experimentation with shock mounts to cushion lamp housings from the effects of damaging vibration has been carried on in several laboratories. Chrysler recommended an isolation pad on their ordnance-truck tail lamps in 1944 to protect them from failure.[1] Later they introduced another mounting that could be adapted to all ordnance vehicles.[2] The isolation theory of protecting lamp filaments has also been studied by the Ordnance Corps, the Guide Lamp Division, and the Cleveland Tank plant of Cadillac Motors. Each reports some instances where life was increased. Most lamps mounted on Ordnance vehicles now have one or more isolation devices to protect the lamp filament from critical frequencies.

2. Studies of Critical Frequencies.—In an effort to meet the problems of the short life of military lamps, a number of tests were conducted for the purpose of establishing the vibratory frequencies and peak accelerations present at various lamp locations on Ordnance vehicles.

The General Motors Truck and Coach Division reported the results of an investigation conducted to determine the frequencies of vibration present at the lamp housings on a Reo Army Truck, M-48.[3] Three types of vibratory excitation were used on the vehicle: engine excitation with the vehicle stopped, the vehicle coasting on smooth road with the engine stopped, and the vehicle coasting on Belgian Block road with engine stopped. Accelerometers were mounted on the left front marker light, blackout drive lamp, service drive lamp, tail lamp, and instrument panel.

The frequencies and peak accelerations noted in this investigation were generally low. Fifty cps was the most common frequency observed, although the range was from a low of 10 to a high of 600 cps. The accelerations in terms of g's were generally fractional, but two readings of about 4 g's were recorded.

General Motors conducted a similar test on a GMC Army Truck, M-135. This work was motivated by unusually frequent early failures of 28-volt lamps. The methods of excitation were essentially the same as in the previous investigations except that vehicle acceleration on a smooth road and slamming the hood were added to the tests. The predominant frequencies (in cps) observed at the various lamp assemblies were as follows:[4]

Service drive light	55 to 57
Instrument panel light	40 to 54
Left front marker light	46
Blackout drive light	110 to 550
Tail light	18

All vibrations of 1-g acceleration or more, observed at any of the lamp assemblies, were in a frequency range of from 8-120 cps. One exception to this was a blackout drive light where a 550-cps vibration was present at an acceleration amplitude of 2.0 g. The largest acceleration was at the tail light, where 5.6 g was recorded.

General Motors continued their tests of deriving the vibrations present in the service drive lamp on a GMC Army Truck, M-135.[5] These tests represented a more intensive study of the service drive-lamp vibrations and the cause of filament failure.

It was concluded in this report that the probable cause of filament failure is the coincidence or near-coincidence of the filament resonant fre-

quencies with the frequencies of vibration of the lamp assemblies in the range of from 240 to 320 cps. The frequencies of vibration of the lamp in this range are due primarily to a resonant mode of the mounting panel and resonant modes within the lamp assembly itself.

The Cleveland Tank Plant of the Cadillac Motor Car Division issued a report on tests conducted to isolate the tail lamp from destructive vibrations.[6] They found that the No. 1251 bulb filaments would resonate at various frequencies between 250 and 400 cps. By designing a new bracket which isolated the bulb from these critical frequencies, near-normal lamp life was experienced.

The Development and Proof Services at the Aberdeen Proving Grounds were authorized to determine the amplitudes and frequencies of vibrations encountered in wheeled and track-laying vehicles during different modes of operation. The second report of the project gave the maximum accelerations and corresponding frequencies found at selected stations on the vehicles.

The conclusions of this report were the following:[7]

1. The accelerations measured in the wheeled vehicles both in stationary (engine running) and road tests normally did not exceed 0.5 g's but occurred at frequencies of from 41 to 480 cps.

2. In the wheeled vehicles tested, a maximum acceleration of 2.9 g's (83 cps) occurred in the vertical plane of the tail light at 30 mph on a 2-1/2 ton, M-211 truck.

3. In the track-laying vehicles tested, a maximum acceleration of 5.2 g's (98 cps) occurred in the vertical plane of the battery at 30 mph on Tank, 76-mm Gun, M41E1.

4. The tank, 76-mm Gun, M41E1 and tank, 90-mm Gun, M47 had the greatest magnitude and variance of accelerations, while the tank, 120-mm Gun, T43 accelerations did not exceed 0.6 g's.

The discussion would not be complete without mention of studies of critical frequencies of lamp filaments. Numerous studies are cited in the first progress report for this project.[8] Most of these studies used magnetic vibrators to determine critical frequencies of filaments and entire lamp assemblies.

3. Studies of Lamp Performance Under Service Conditions.—The Ordnance Corps has undertaken several programs to determine the life expectancy of lamps and how failures occur in service.[9] These tests have been instigated for varying purposes, such as comparison of experimental sealed-beam

units, determination of lamp failures in vehicles undergoing durability operations, endurance tests of all-glass units, and winter tests on shock-mounted tail lamps. Collectively, 73 vehicles participated in these tests. The tests included most of the common wheeled and track-laying vehicles.

The data presented in the Ordnance Corps reports are quite general and do not give a clear story of all the lamp failures. From the given data the following observations can be made:

1. Failure frequency does not seem to have much correlation from test to test.

2. Climatic conditions probably have no effect on the life of lamps.

3. Lamps used in wheeled vehicles have a longer life than similar lamps in track-laying vehicles.

4. The all-glass sealed-beam service drive lamp appears to have a longer life expectancy than a composite unit.

5. The failure in service drive lamps occurs in both major and minor filaments almost equally.

All the reports established the fact that early failures do occur in Ordnance type lamps. The purposes and conditions of the test varied widely which made correlation of data impractical. It is suggested that the reports of future service tests give more details of the test conditions and better descriptions of the results.

4. Studies of Lamp Design Changes.—The possibility of improving lamp life by altering the filament structure has been given considerable attention. Most of the changes that have been attempted were initiated by personal communication with the manufacturer and therefore are undocumented. Of several filament changes that were recommended and documented, little improvement was noted.[10]

D. SUMMARY

The development of larger military vehicles with increased demands on the electrical systems has created a serious problem of maintaining lamps on these vehicles. Corrective measures have been taken by lamp makers and other interested groups. Usually these problems have only been studied when the situation became acute and solutions here imperative. Consequently, there is little evidence of a coordinated program to strengthen and/or lengthen the life of lamp types used on military vehicles.

II. ORDNANCE INCANDESCENT LAMP IMPACT TESTER

A. HISTORICAL BACKGROUND

It can be assumed that lamp filaments will fail on vehicles when excited into bending resonance of the two-noded mode by high harmonics of the engine torque or by random impacts of the vehicle moving over bumps. Lamp filaments will fail in laboratory tests that excite the filament at the two-noded mode resonant frequency by a steady-state vibration or by impact loading. Since service conditions and laboratory tests both excite the two-noded mode of motion, it may be assumed that a lamp that shows superior life in controlled laboratory tests will show superior life under road conditions.

The impact method of setting up vibration has been used for many years in determining the durability of vehicular lamps. As long ago as 1940, the SAE approved a design for a "vibration machine" which was essentially a form of impact machine adapted to test vehicular lamps and lamp assemblies.[11] To meet specialized needs, various concerns improvised their own test devices to simulate environmental conditions. A number of these devices are still in regular use.

On May 1, 1943, the Ordnance Corps requested the Chrysler Engineering Division to build a machine to be used in determining the durability of vehicular lamps by the impact method. This machine, now known as the Ordnance Incandescent Lamp Impact Tester and shown in Fig. 1, has been used more or less continuously ever since, both for routine acceptance testing and for special research problems.

Early use of the impact tester indicated its probable value as a means of acceptance testing of lamps purchased for military vehicles. Copies of the drawings and specifications were therefore sent to the major lamp companies, to several component manufacturers, and to the Bureau of Standards, and each of these concerns proceeded to build impact testers for their own use. It soon became apparent, however, in comparing data taken on different but presumably identical machines, that considerable differences existed in the performance of these machines.

B. STUDIES OF THE ORDNANCE IMPACT TESTER

The initial studies of the Ordnance impact tester were conducted by the project primarily on machines from the Detroit Arsenal, Chrysler Corporation, The Electric Auto-Lite Company, and General Electric. These machines will be henceforth referred to as the Arsenal, Chrysler, Auto-Lite, and GE testers, respectively.

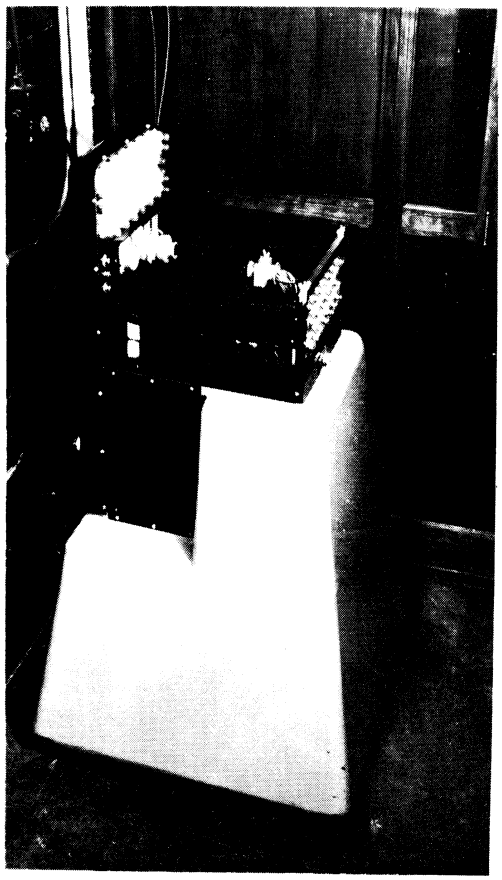

Fig. 1. Ordnance Incandescent Lamp Impact Tester.

In review, for those unfamiliar with the operation of this device, the lamps to be tested are mounted in a frame which is attached to the end of a pivoted truss-like arm. The arm is lifted up on a rotating cam and permitted to drop onto an anvil. The downward motion of the frame is suddenly stopped by the anvil, its motion reversed by elastic bouncing; and the filaments are set in free vibration in a two-noded mode. When this happens often enough, the filament fails in fatigue.

Initial study of the Arsenal machine was accomplished by the use of high-speed motion pictures taken of the tester in operation.[12] Seven runs were taken at selected cam speeds of from 300 to 900 rpm. The studies of these films revealed the following behavior pattern:

1. At the higher cam speeds, the two anvils never seemed to come in contact. All contacts occurred between the cam and cam follower.

2. At the higher speeds, some oscillation of the arm about an axis through the cam follower was observed.

3. Noticeable bouncing of the cam follower on the cam occurred.

4. At 600 rpm and below, the cam follower began to respond more faithfully to the cam, less oscillation was produced, and the pattern of anvil motion became more repetitive.

It was concluded from these high-speed films that:

1. The original specification of 900 rpm for the cam speed was much too high.

2. Theoretical studies of the mechanics of the arm and hinge combination were needed.

3. More quantitative data on the performance of the tester were needed, utilizing accelerometers, displacement measurement devices, and indicator lamps in various combination.

The mechanical constants of the movable arm were secured by a series of tests and observations of the Arsenal tester.[13] The assembling of these data led to a more thorough understanding of the machine and later to an important modification of the hinging of the arm, which is shown in Fig. 2.

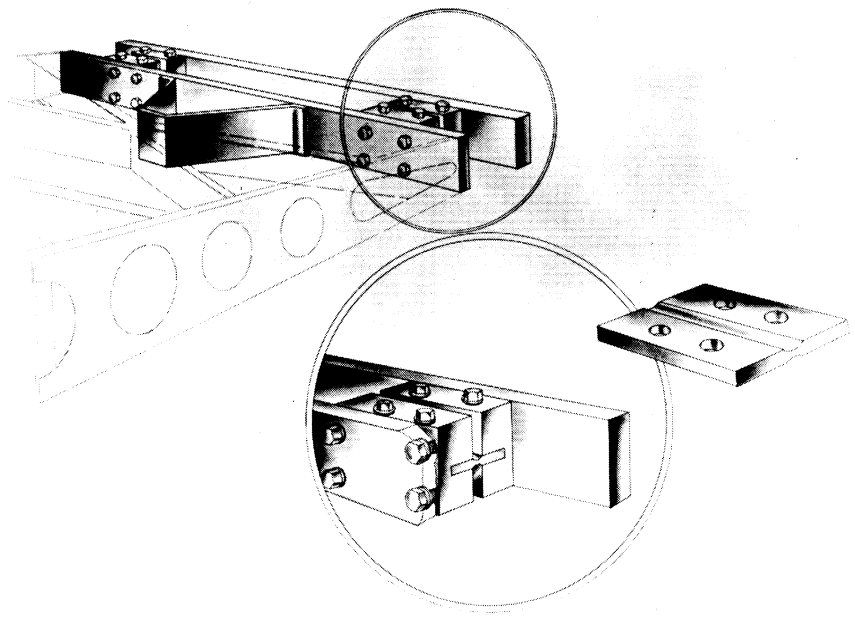

Fig. 2. The modified hinge of the arm for the Ordnance Impact Tester.

These mechanical constants were used in a theoretical analysis of the movable arm.[14] This investigation indicated that the upper and lower anvils did not act as short beams in pure compression. It seemed likely that the upper anvil was bent in the vertical plane so that its effective flexibility was due to bending rather than compression. It was calculated that the ef-

fective spring constant for the anvil impact was of the order of 210 x 10^6 lb/in. The main purpose of the frame motion is to give the initial velocity to the filament and is independent of the acceleration on the anvil. This suggested that the entire machine was using a great amount of energy to produce a moderate result.

To ascertain definitely the difference between two similar impact machines, the tester from Chrysler was secured for a short time.[15] With the use of various sensing devices and associated recording instruments, numerous data were collected. Examination of these data yielded the following conclusions:

1. With operating techniques as nearly identical as possible, the two machines developed quite different peak accelerations.

2. Each machine showed changes in peak acceleration with speed changes. In general, the higher speeds developed the greater acceleration values.

3. The average peak acceleration for the Arsenal machine ranged from 47 g to 28.9 g. On the Chrysler machine the range was from 37.1 g to 35.95 g.

4. Repetitive runs on the same machine with the same operating conditions usually gave different acceleration values.

Subsequent tests established criteria for the following structural modifications or changes in operation of the Arsenal tester:

1. arm hinge arrangement (shown in Fig. 2),
2. establishment of the optimum cam speed,
3. modified method of lamp plate attachment,
4. maximum drop of the upper anvil, and
5. maximum downward force of the upper arm.

When the Arsenal machine was modified to conform to the previously enumerated changes, limited mortality tests and various test instruments indicated the machine to be a fairly consistent test device.

C. MODIFICATIONS OF ADDITIONAL TESTERS

The Electric Auto-Lite Company, through its representative on the SAE Lighting Subcommittee, volunteered to make its impact tester available to the project so that it might be modified to conform to the changes just completed on the Arsenal tester. This seemed to be a logical step since

it would permit a series of parallel tests to be carried on simultaneously on both machines for the purpose of indicating the amount of correlation to be expected in their performance. Accordingly, the Auto-Lite tester was removed from its base and shipped to the University.

After careful examination of the machine, it was modified like the Arsenal tester. Upon completion of these modifications, comparative tests were made with the two machines. Considerable trouble was experienced with the Auto-Lite machine, which did not give consistent mortality results; yet the experience that was gained helped prevent similar problems in future modifications. After a series of slight adjustments, the Auto-Lite machine was considered to be performing within the tolerances that seemed reasonable for this type of tester.[16]

The lamp-testing section of GE decided to modify their impact tester to conform to the already modified Arsenal and Auto-Lite machines, and after a few minor difficulties were overcome, their machine appeared to give consistent test results.

In the initial effort to obtain evidence as to the comparative performance of the three modified testers, a small quantity of type 1251 lamps, selected from the same manufacturer and the same production lot, was allocated to each tester for a mortality-curve determination. Minor deviations in lamp-voltage regulation and testing procedure undoubtedly existed. Nevertheless the results are close in their agreement, as will be noted in the curves of Fig. 3.

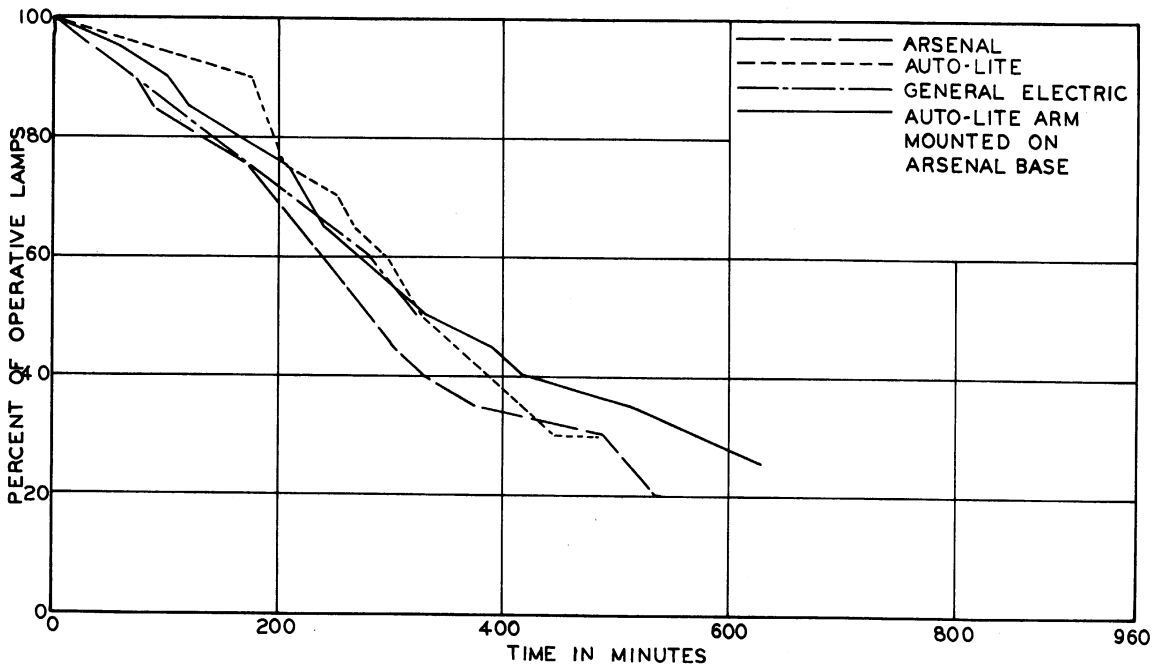

Fig. 3. Comparative mortality curves of the Arsenal, Auto-Lite, and General Electric modified testers.

At the request of the Impact-Tester Panel of the SAE Ordnance Lamp Subcommittee, prints and specifications covering the recommended modifications to the Arsenal tester were prepared and distributed to panel members and other interested groups.[17] Chrysler, Tung-Sol, and Westinghouse then modified their testers to conform to these recommendations, while the Bureau of Standards and Guide Lamp did not alter their machines. Information was later received that indicated improved performance of these modified machines.

D. COOPERATIVE CORRELATION STUDY OF MODIFIED TESTERS

The SAE Impact-Tester Panel, in a meeting at The University of Michigan on November 17, 1955, agreed that correlation tests of all the modified impact testers were desirable. Plans were formulated to supply each of the interested laboratories with a group of 100 type 1251 single-filament lamps, and a companion group of 100 double-filament lamps, type 1034. Each type was to be part of a homogeneous lot thoroughly mixed before packaging. The following test conditions were agreed upon:

1. The single-filament lamp was to be cycled 25 minutes on and 5 minutes off for a total of 16 cycles (8 hours), or until 75% have failed, whichever occurred first.

2. For the two-filament lamps, the operation was to be 20 minutes with the minor filament on, 5 minutes with both filaments on, and 5 minutes with both filaments off for a total of 16 cycles (8 hours).

3. The test voltages were to be 28 volts for the type 1251 and 14 volts for the type 1034.

4. Inspection for possible failure was to be at least once per cycle; said inspection was to be during the cold portion of the cycle.

5. Testing was to be in lots of 20 at a time.

The type 1251 and 1034 lamps were distributed to the six laboratories in the test program and the results were collected for study.

An analysis of variance was made separately of the data received from the type 1251 single filament and the type 1034 double filament tests.[18] The hypotheses tested by this analysis were:

1. The machines are consistent; i.e., repeated tests on the same machines give similar results.

2. The machines are uniform; i.e., similar tests on different machines give similar results.

3. The time periods are uniform; i.e., no time period favors the failure of lamps more than another.

A study of this analysis of variance for the Arsenal, Auto-Lite, Chrysler, General Electric, and Tung-Sol machines reveals the truth of the hypothesis that each machine was consistent. That is, each tester repeatedly gave similar results in testing the 1251 lamps. The hypothesis that the failure rate is uniform for each time period is also true.

For the data from the tests of the 1251 lamp, our analysis rejected the hypothesis that the machines are uniform, for the variance which arose because of the variation between machines was significantly greater than the variance of all the data. The ratio of these estimates for the variance was 5.7 (with 4 and 240 degrees of freedom), which is significant at the 1% level. An inspection of the data led us to believe that Machine 2 (Auto-Lite) was different from the others. The summary of the analysis of variance performed on the data from the other four machines confirmed this suspicion.

Auto-Lite was requested to repeat their 1251 tests upon completion of this analysis. These tests were operated the same as previously prescribed, except that each was terminated at the end of 360 minutes.

These test results were then used for a second analysis of variance for all machines except the Westinghouse. The summary of this analysis still indicated that the machines were not uniform (at the 5% level).

It was pointed out that the Westinghouse data were not included in this analysis because they were not available at the time of computation. It was quite evident from an inspection of the data when available that the results of the analysis would not have been influenced by their inclusion. That is, the significance of the analysis would not have been altered.

The hypothesis that the machines were consistent still held true for the 1034 tests. The tests show, however, that the time intervals were not uniform, for reasons that were not clear. The most probable cause was inaccurate reporting of data.

The hypothesis that the six machines were uniform was rejected. Here again the variance which arose because of variation between machines was significantly greater than the variance of all the data. The ratio of

these two estimates for the variance was 5.04 (with 5 and 300 degrees of freedom), which is significant at the 1% level. If the Westinghous machine was excluded, we could not reject the hypothesis that the machines are uniform. This indicated that the Westinghouse machine was at variance with the other machines. However, it should be noted that the variance due to between-machine differences was very high, i.e., F = 2.34 with 4 and 240 degrees of freedom (2.65 = 5% significance level).

The Chi-square (χ^2) test was used to test further the stated hypotheses.[19] This test determined whether frequencies in the sample differed significantly from frequencies predicted by a hypothesis about the parent population. These tests confirmed the results obtained in the original analysis.

The data from these mortality tests were used to determine if there was bias at the individual lamp socket. From the tests for socket bias, we were unable to conclude that there was a bias, yet due to a lack of sufficient data we cannot conclude that the failures were random. It was definitely established that bias existed when the failures were classed according to the row in which they occurred.

It would be convenient in making impact tests to observe only the number of failures at the end of a predetermined time interval instead of making regular observations during the test. A hypothesis to this effect was tested with the available 1251 and 1034 data.

A lamp was called defective if it failed in 12 or fewer cycles (i.e., 6 hours), and the data were then classified according to defective and non-defective lamps. An analysis of variance was made of the data for the 1251 lamp and for the 1034 lamp. The results of the analysis were substantially in agreement with other analyses just described. This would indicate that only one observation for failures at the test completion would be necessary for some types of impact tests.

From this study the following conclusions were drawn:

It was found that each machine tests lamps consistently. This indicated each machine could be used to test lamps against a "standard lamp" that has been tested on that machine. Fairly frequent checks would be needed to determine if this consistency still held. These tests could be made either on the basis of comparison with a mortality curve or by observing the number of "defective" lamps in the sample. (The decision must be made on the basis of what qualities are desired in the lamp.)

There was disagreement between the 1251 and 1034 tests as to the uniformity of failures for time periods. No definite reason could be determined

for this nonuniformity. Further mortality tests, if of a favorable nature, could eliminate this nonuniformity.

The machines as a group were not uniform, i.e., similar tests on alternate machines did not give similar results. This was demonstrated by the fact that a different machine was at odds with the group in both 1251 and 1034 tests. It was shown that the Arsenal, General Electric, and Tung-Sol testers are uniform and can be used interchangeably with one another. It was also shown that the Auto-Lite, Chrysler, and Westinghouse testers cannot be used interchangeably. It is possible that after further tests the Chrysler and Westinghouse machines could be used interchangeably with the others if some handicap of weighting were given to their results. The Auto-Lite machine, on the basis of a second 1251 test, is still significantly different from the group of five machines.

E. PRESENT STATUS OF THE ARSENAL-TYPE TESTER

It seems appropriate to report briefly on the status of the eight Arsenal-type impact testers. Six of the eight were modified in accordance with the recommendations made by the project. Four of these six modified machines are being used in regular test programs and the other two are used only spasmodically. One of the two machines that was not modified was changed to a shaker arrangement several years ago, and the other is not operated at all.

The modified machines have been inspected from time to time. It is evident that most of the machines are not maintained in a manner that will keep the unit giving consistent results. Most of the offences pertain to oil and dirt on the anvils and alignment of the anvils. Several machines have been slightly altered by the operator and no longer can be considered as conforming to the recommended modification.

F. SUMMARY

An impact-test device for miniature incandescent lamps was designed and built for the Detroit Arsenal as an instrument for lamp development testing and lamp acceptance testing. This device, although generally accepted by the lamp makers and users, was never considered reliable. After the project recommended certain modifications for this tester, all machines that were modified did become consistent on the basis of a series of mortality tests administered by the project. These same tests indicated that only three of the group were uniform, i.e., the Arsenal, General Electric, and Tung-Sol. It is doubtful that any of the machines are uniform now since the majority have not been properly serviced or maintained.

III. ROTARY-DRUM IMPACT-TESTER DEVELOPMENT, EVALUATION, AND USE

A. BACKGROUND OF THE ROTARY-DRUM TESTER DEVELOPMENT

1. Basis for Design.—Several types of impact machines have been designed and built for lamp-testing purposes by industrial concerns and test agencies. The one developed by Chrysler for testing miniature lamps, which has been described previously, is one of the better known and widely used devices for impact testing. The erratic and inconsistent behavior initially observed in this tester has been largely eliminated by several modifications in the structure and in the operating specifications which resulted from studies carried out under this research project. With these modifications it has become a fairly reliable testing device, as shown by the results of two series of correlation tests conducted by cooperating agencies.

There are still a number of basic disadvantages; the replacement cost is high (estimated as high as $7000), it has a high noise level when operating, a large size and weight, and a need for frequent careful lubrication, cleaning, and routine maintenance. The noise is so disturbing that the majority of the installations are in sound-insulated cubicles. One further disadvantage this machine will have for some time is a lack of confidence in the test results by the operators.

2. Conception of a Simplified Impact Tester.—It was pointed out in a theoretical analysis of the Arsenal tester that the necessary acceleration of the lamp filament could be attained by a simpler method; for example, dropping the bulbs themselves through a distance of 1/32 inch and letting them bounce would apply as much stress to the filament as was attained by the operation of the heavy tester.[20]

The analysis also indicated that the considerable mass of the machine's moving parts served as an elastic cushion between the anvil and the lamp filament. Consequently the strident fury of the machine led to a gentle result. The logical step in a new approach to an impact device involved the reduction of this cushioning to a minimum. It seemed likely that an arrangement could be made whereby the lamp would be dropped onto a relatively inelastic surface to excite the filament. This belief was confirmed by comparing relative vibration amplitudes for a filament excited first on an Arsenal-type Tester and then by releasing the lamp from a distance above a masonite surface equal to the drop.[21] The free drop gave consistently greater amplitude of vibration.

3. Pilot Model.—A device was constructed to embody these ideas.[22] This pilot model consisted of a cylindrical wooden drum turned by a motor

and a lamp-holding device which supported the lamp envelope in a horizontal position on the upper surface of the drum. The drum had four uniformly spaced steps or offsets cut parallel to the axis of rotation. As the drum was rotated, the lamp was raised and dropped 3/32 inch as it encountered each step. The excitation of the lamp filament produced by this model proved to be more than ample for practical testing purposes. Reduction of the offset tended to produce lamp failures consistent with expectations.

B. DESCRIPTION OF THE STANDARDIZED ROTARY-DRUM TESTER

The present form of the rotary-drum tester has evolved from the pilot model just described. The first enlarged model to embody the essential features of this design is illustrated in Fig. 4. It could accommodate 10 B-12 lamps, but was also designed to test 20 G-6 lamps and proportionate numbers of other sizes. It is interesting to note that the only features of this tester which seemed to require any change after exhaustive tests were the lamp holders.

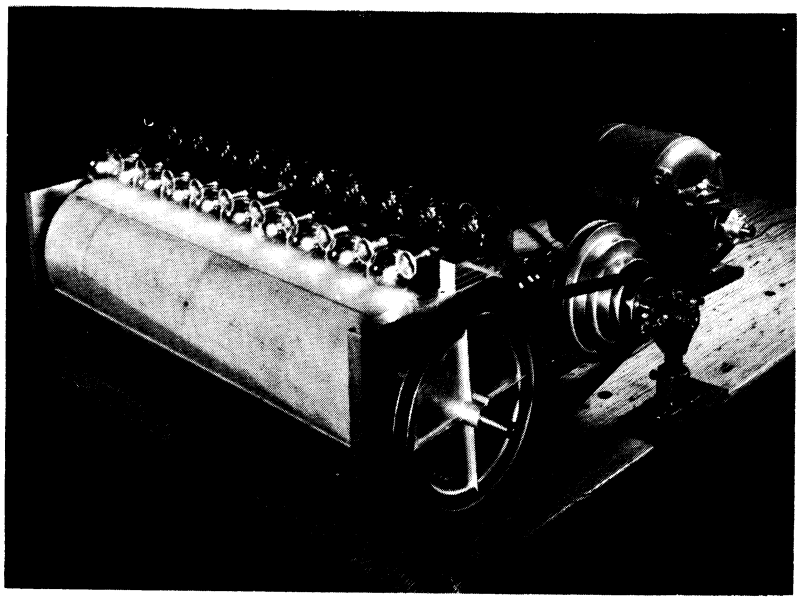

Fig. 4. Principal structural features of the first rotary-drum impact tester.

Figure 5 shows the rotary-drum tester in its present form with a rack of G-6 lamps mounted for testing. It is quite evident from this illustration that the tester components have only been changed slightly to take advantage of design improvements. The machine, which is 30 x 21 inches and weighs 80 pounds, can be easily handled and requires small bench space.

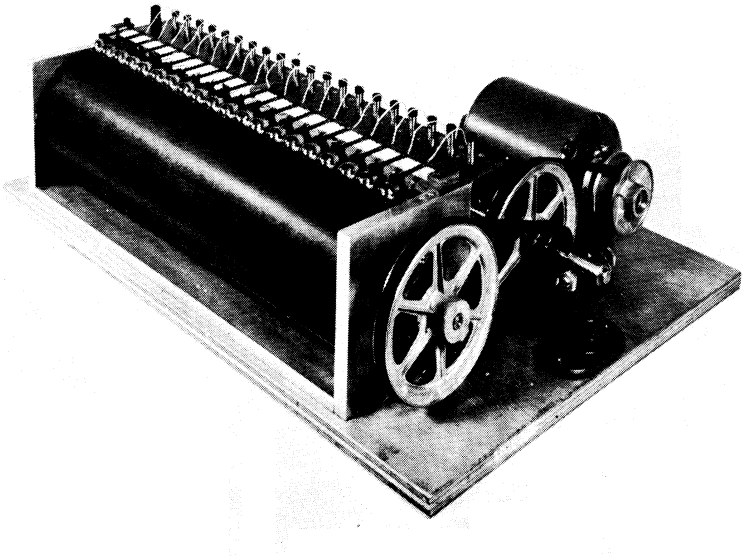

Fig. 5. The modified rotary-drum impact tester with a rack of G-6 lamps mounted for testing.

The basic machine, of which the rear quarter-view is shown in Fig. 6, is composed of three assemblies: the drive mechanism, the frame, and the cam. The purpose of the drive unit and the frame are self-explanatory, but it should be noted that each is composed of materials and parts that can be readily obtained, and can be fabricated with simple basic tools. The dimensional tolerances that are specified for most of the parts are readily obtainable.

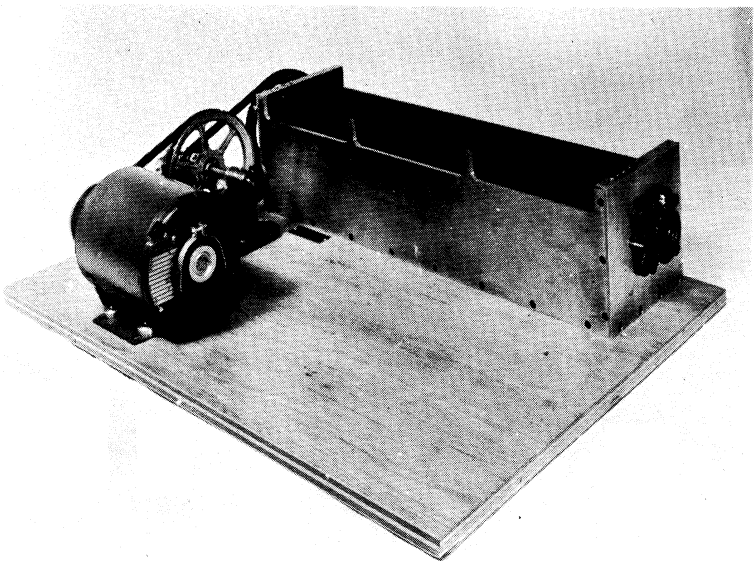

Fig. 6. The basic impact tester showing the drive mechanism, the frame, and the cam.

The cam, partially disassembled and shown in Fig. 7, has 21-13/16 inches of test length and is unique in that the offset can be adjusted up to approximately 1/8 inch by a simple procedure.[23] The length of this cam is adequate to accommodate either 20 G-6 or S-8 lamps and proportionate numbers of larger lamps. The cam material is such that is can be operated in normal environments with little or no dimensional changes due to moisture or heat.

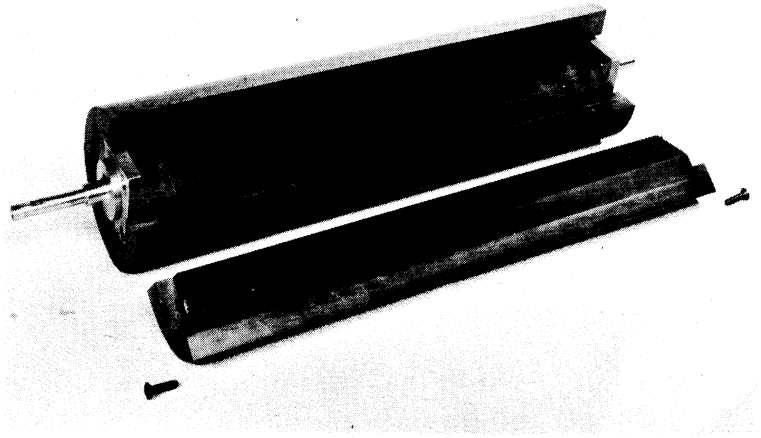

Fig. 7. The cam, partially disassembled, of the impact tester.

The operating principle of the tester can be explained quite readily. As the cam is rotated, the lamps are raised and dropped onto a relatively inelastic surface. This impact loading excites the filaments in a two-noded mode of free vibration with a large enough amplitude to cause ultimate failure. The two factors of the cam that govern the lamp's velocity of impact, which is the most important factor in producing filament deflection, are the cam's offset and speed of rotation. The theoretical relation of these two factors to the total relative velocity of impact was derived in a previous report.[24] This derivation was supported by experimental evidence, since it had been found that by increasing the cam offset and/or the cam speed the velocity of impact was increased, the mortality rate increased, and the filaments tended to fail by plastic deformation instead of by fatigue. The borderline between these two types of failure is at or near 8 inches per second.

The present type of lamp holder, shown with G-6 bulbs in Fig. 8, has evolved from the original model in which each lamp was soldered onto a pivoted brass arm. The holders have been modified to permit quicker installation of lamps with either aluminum or brass bases into a spring clip unit. A bulb-insertion tool that can be used for the G-6 or S-8 lamps, simplifies the insertion or removal of lamps from the spring clips. Electrical contact is obtained through the steel clip on the base and a spring

contact at the rear. Each lamp-holder unit can be removed from the tester frame quickly and easily, which also permits the mounting of different lamp types.

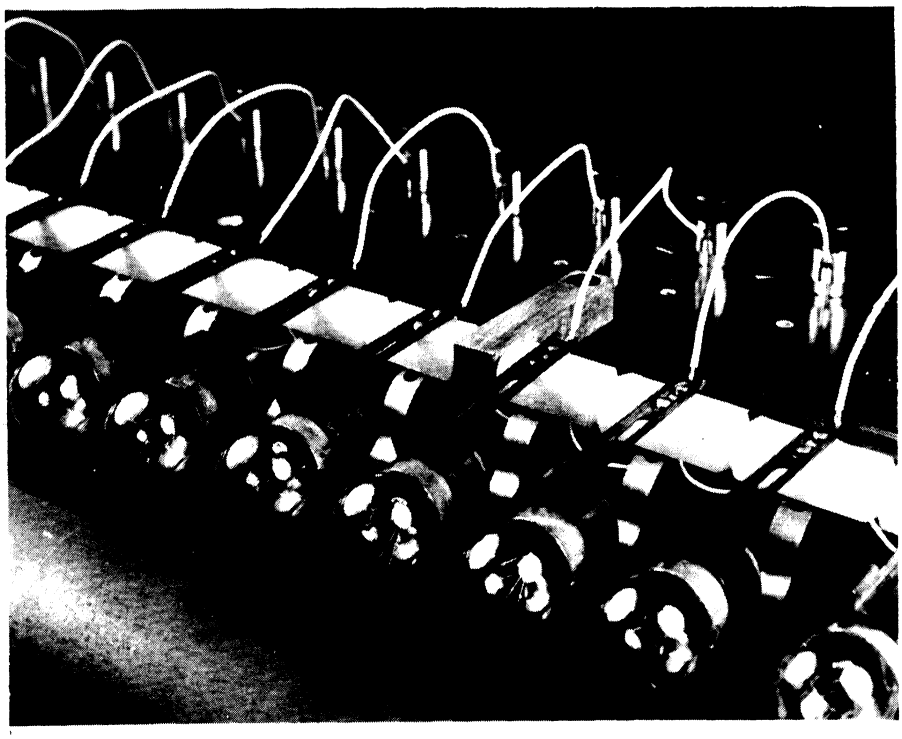

Fig. 8. Method of lamp attachment on the rotary-drum tester.

It was previously pointed out that the velocity of impact is the most important factor in producing filament deflection. The lamp holder, considered as a pendulum, which rotates around the pivot, also affects this velocity of impact. By experimental evidence and calculation it has been determined that the linear velocity is from 7.27 to 7.8 inches per second for a lamp holder of the type now used.[26] Each lamp type has a holder designed for it according to its physical size, i.e., the impact point on the envelope is always maintained at 2 inches from the pivot center.

Complete operating instructions, maintenance requirements, suggested accessories, and complete working drawings are given in Progress Report No. 45 for this project.

C. EVALUATION OF ROTARY-DRUM TESTER

As soon as the enlarged model of the rotary-drum tester was completed, a series of mortality tests was undertaken to determine the machine's characteristics and comparative mortality results with the Arsenal tester.[27] These first mortality tests were undertaken with a limited number of lamps

having either B-12, RP-11, or G-6 envelopes. The test procedures duplicated those previously performed on the Arsenal tester. For this evaluation, both testers were operated simultaneously with the lamps supplied by the same power source and controlled by the same cycling device.

The type 2416 lamp with the B-12 envelope consistently had a higher mortality rate on the rotary-drum tester than on the Arsenal unit. The number of lamps tested was quite small and consequently some differences occurred between successive mortality tests. The same tests were repeated for the type 1265 with the RP-11 bulb and the type 1253 with the G-6 bulb. Both of these tests produced results contradictory to expectations. In each of these cases, the Arsenal unit had greater percentages of failures at the test completion.

These latter tests gave evidence that improvements to the lamp holding devices were definitely needed. The method of pivoting each lamp on its base proved impractical for testing large numbers of lamps because of individual differences due to the manufacturing process and to different lamp sizes.

Effort was then expended to improve the lamp holders. After trying several different methods, the arrangement shown in Fig. 9 appeared to offer the most promise. With this system, the lamps were soldered to a pivoted arm that positioned the point of impact a definite distance from the pivot center. Proper alignment of lamps having differences in base size and bulb shape and/or size was accomplished by varying the length of the pivot leaf and raising or lowering the center of the bearing rod. A simple jig was used to hold the lamps in position while the arm was soldered to the lamp base.

To meet the need for more data on tester performance for comparison with previous runs on the rotary-drum tester and the Arsenal tester, several additional groups of lamps were subjected to mortality tests. The first of these was a homogeneous group of type 1251 lamps, supported in a manner similar to that of the lamps shown in Fig. 9, and impact-tested for 240 minutes or until 100% failure The drum speed was adjusted to give 700 impacts per minute and the cam offset was 0.063 inch. The operating cycle was set at 25 minutes on and 5 minutes off, with a neon lamp switched in series with the test lamp to give a visual indication of filament failure during the 5-minute-off period. All lamps were watched closely during each cold cycle, when the likelihood of failure was the greatest, and were given a frequent visual inspection during each hot cycle. The results of five runs, each consisting of 20 lamps, are shown in Fig. 10. It will be noted that the spread was very narrow until the 50% mortality point was passed. About 35% of the failures were due to entanglement and shorting of the filament segments; the remainder were due either to fatigue or to sawing action at the support wire.

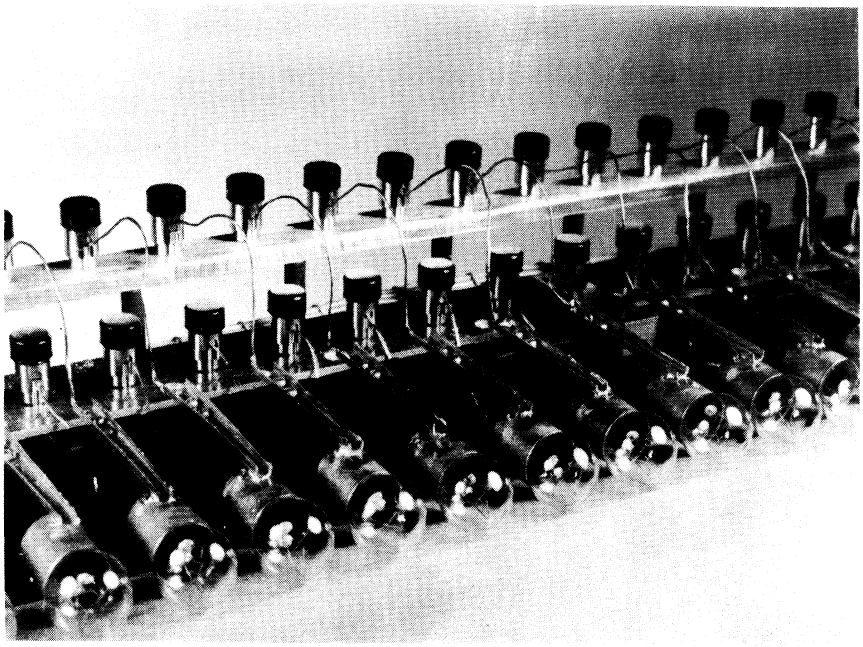

Fig 9. G-6 bulbs soldered to improved lamp holders.

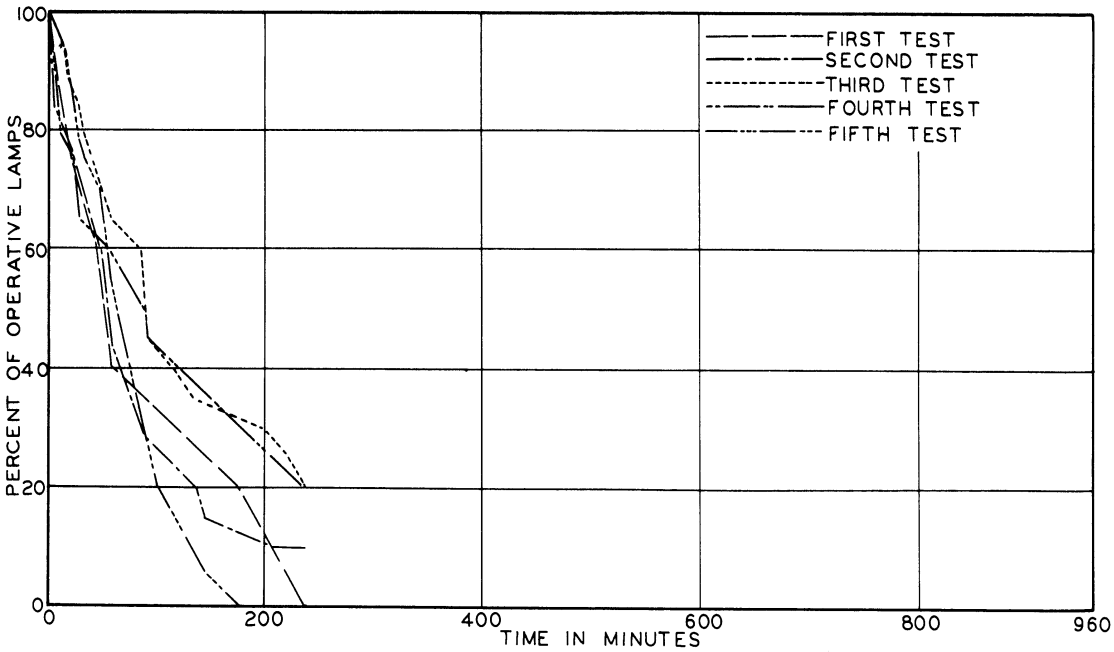

Fig. 10. Five mortality curves of type 1251 lamps tested on the rotary-drum impact tester.

Similar results were experienced with impact tests on a second group of type 1251 lamps obtained from a different manufacturer in which the same test procedure was followed. The spread of the curves was slightly greater, but no marked differences in mortality rate could be observed. In this group, about 25% failed as a result of entangled filament sections, with the rest showing fatigue failure.

For a third series of tests, a type 1683 lamp with an S-8 bulb was selected, primarily to see if a change in bulb size would affect the consistency of tester performance. Tester speed, cam offset, and operating procedure were exactly the same as in the previous tests.

Figure 11 shows the results obtained in four test runs. A modified G-6 lamp holder was used for the first three tests, while a regular S-8 holder was employed in the fourth test. The spread of the runs is about the same as observed in the previous 1251 tests, but the mortality rate is considerably lower.

It has been shown that successive mortality tests on the rotary-drum tester produce results that are very closely related for lamps of the same origin. Initial comparative tests on this and the Arsenal tester had ended quite inconclusively, but now with greater numbers of test specimens the comparisons were attempted once again.

Figure 12 shows the range of mortality tests on ten racks of type 1251 lamps distributed equally between the Arsenal and rotary-drum testers. Standard testing procedure prevailed; that is, cycling in each case was alternately 25 minutes on and 5 minutes off, with frequent observations of lamp condition during each hot cycle and almost continuous observation during each cold cycle when the neon indicator lamps were in the circuit. Normal speeds and cam settings were used. It is quite evident that the rotary-drum tester was more severe and caused greater mortality than the Arsenal tester, although the character of failure was the same for each tester.

Ten additional racks of type 1251 lamps obtained from another manufacturer were then tested in exactly the same manner, five racks on each tester. The mortality ranges obtained were very close to the previous series, with the same type of failure predominating.

Further comparative tests were completed, using several lots of type 1683 lamps. These were of interest chiefly becuase previous experience had shown that it was very difficult to produce impact failures in this lamp. Again the rotary drum tester produced more failures in a given time than the Arsenal tester.

This rotary-drum impact tester was also used for routine mortality test-

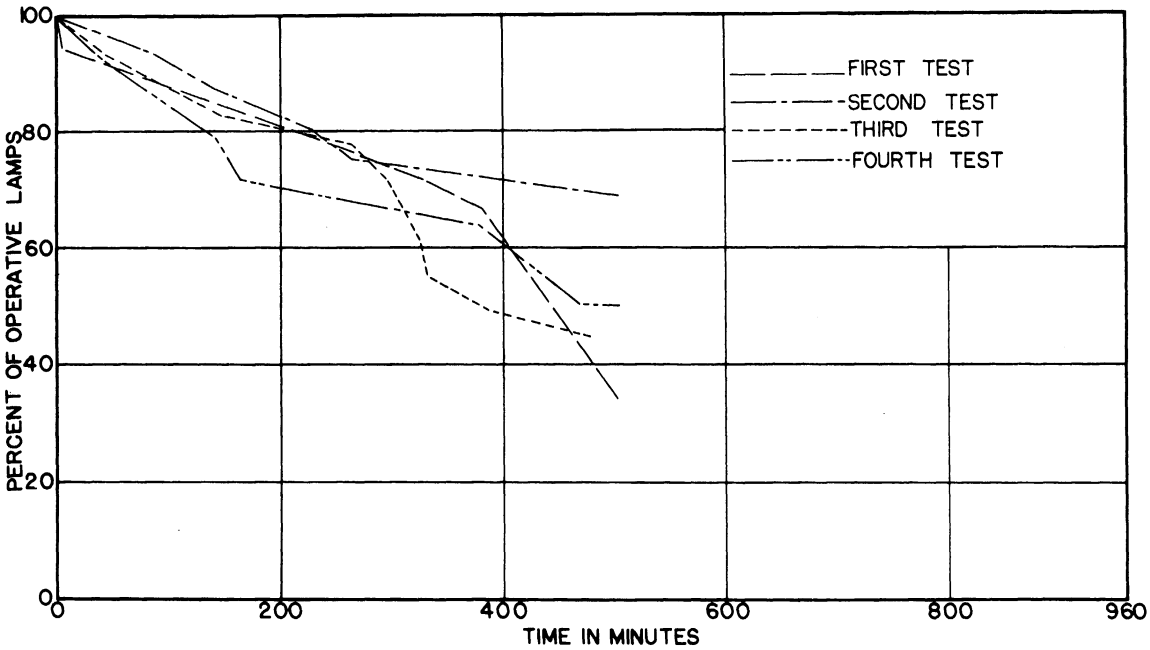

Fig. 11. Four mortality curves of type 1683 lamps of the same origin tested on the rotary-drum impact tester.

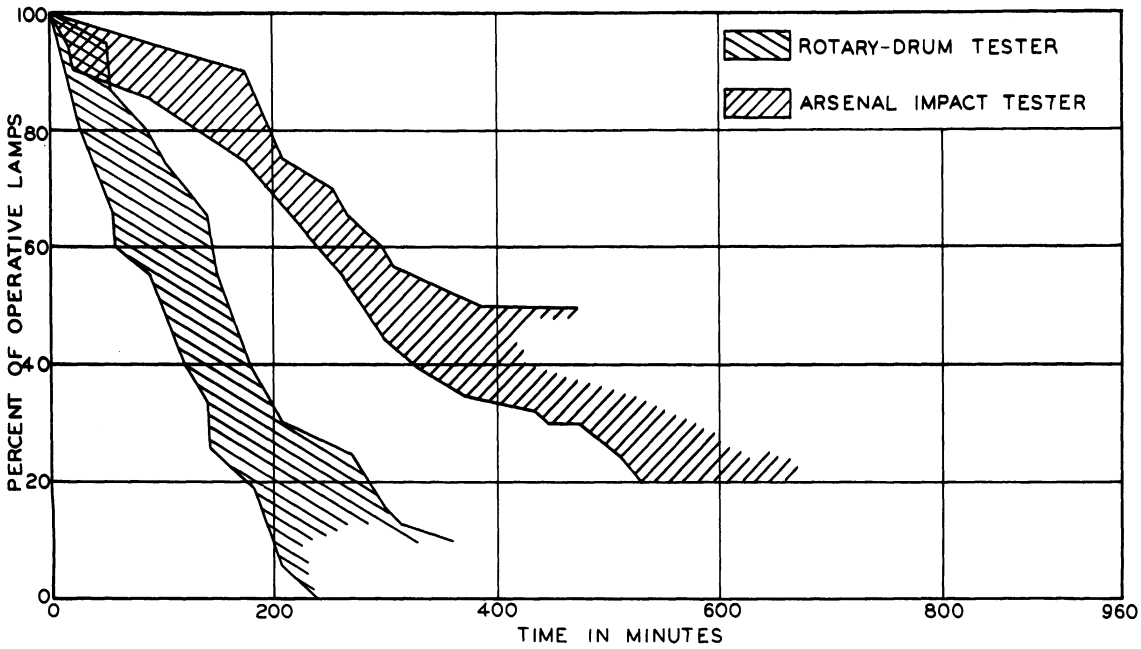

Fig. 12. Comparative ranges of mortality tests completed on the rotary-drum impact tester and the Arsenal impact tester using five racks of type 1251 lamps for each grouping.

ing of special lamps that the project evaluated. Over a period of 28 months, the machine was used for about 100 such tests totaling more than 650 hours. By reviewing past reports of the project, it can be noted that the tester produced many series of tests that were as closely related as those just described.

With the experience of one machine indicating consistent and reliable behavior, it was determined, therefore, to build a second machine for purposes of comparison. The original machine was duplicated except for minor structural changes that increased the available test capacity.[28] After this machine was assembled and inspected, preparations were made for a series of mortality tests to be conducted in accord with past tests. The results of five such tests, using type 1251 lamps, are compared in Fig. 13, with a com-

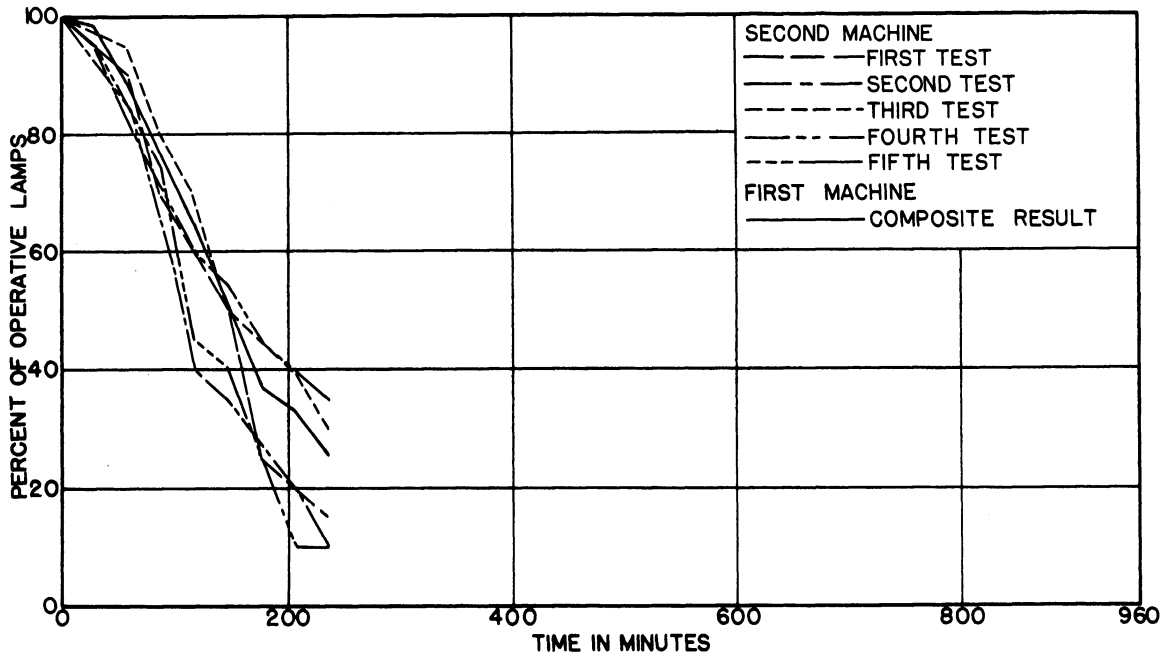

Fig. 13. Mortality results of type 1251 lamps from the second impact tester compared to the composite result of equal tests performed on the original machine.

posite curve obtained from data taken on the original machine. It is quite evident, on the basis of this limited comparison, that consistency and good correlation was secured. When the composite results from both testers were compared, the mortality rate for the new machine was consistently higher by a very slight amount. It is not unrealistic to think that if additional tests were completed, this relationship could easily equalize or reverse.

A second series of 3-cp lamps was tested in a manner similar to that

just described. The relationship of four tests and an equal number of tests from the original machine matched equally well. It was noted that the tests on this second machine appeared to have a slightly higher mortality rate. Statistical treatment of this second series indicated that there was no significance to the slight differences of the mortality rates noted.

D. PRESENT USE OF THE ROTARY-DRUM TESTER

1. Sale of Tester to Commercial Groups.—After numerous series of tests the design of the rotary-drum tester was "frozen" when it was proven practical and functional. When the chairman of the SAE Ordnance Lamp Subcommittee was informed of this, he quickly organized a program whereby interested organizations could purchase a tester. This program proposed to have all prospective buyers place a joint order to gain machine uniformity and possibly a better price.

Although details of the machine and the program were circulated early in the spring, firm orders were slow in arriving to the maker. The following did place orders: Bureau of Standards, Chrysler, General Electric, Hudson Lamp Company, Tung-Sol, and Westinghouse. The progress of the manufacturing operations was carefully observed by project representatives to obtain a check on the tolerances set and to see if any minor changes in the drawings and specifications were required. Shipment of the completed machines was accomplished by September 1, 1957.

2. Evaluation of Testers.—Well before the completion date of these testers, several organizations who had purchased machines were asked for permission to use their testers for limited comparative mortality tests. When completed, five machines were brought to the laboratory for these tests, which were hampered primarily by the small number of test lamps on hand.

Each tester was carefully examined to note workmanship and constructional details all of which were found to be satisfactory. Before each tester was operated, the cam offset was checked and recorded. Lastly, the speed was set at 200 rpm.

The only lamps available for test in sufficent quantity, was a group with 3-cp filaments mounted in a G-6 bulb. Thereupon, these lamps were inserted into the G-6 holder and prepared for the test. The conditions of the tests were as follows:

1. Twenty 3-cp lamps with G-6 bulbs constituted one test.

2. The cam offset was .070 inch $\pm$ .002 inch and the cam speed was 200 $\pm$ 1 rpm.

3. The lamps were operated at 28 volts.

4. The 30-minute cycle was used, with the lamps lighted 25 minutes and 5 minutes not lighted.

5. The tests were operated 8 cycles or 240 minutes.

Figure 14 shows the cumulative mortality results of each tester. This distribution indicates that all five machines gave very comparable results for the limited number of mortality tests (a total of 12 tests for the five machines).

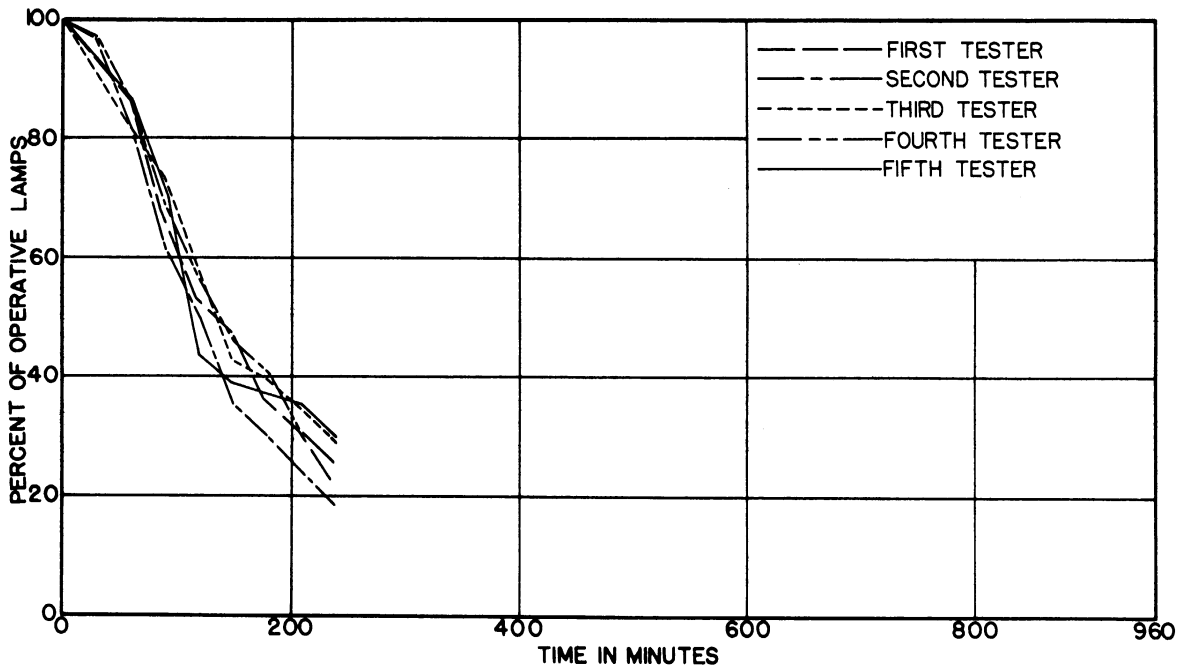

Fig. 14. Comparative mortality results of the five rotary-drum testers evaluated by the project.

E. SUMMARY

The need for a simplified impact tester for miniature lamps was ascertained when the Arsenal tester was evaluated. It was determined that the necessary force to impact-test a lamp could be secured by dropping it through a distance of 1/32 inch and letting it bounce. A device to employ this idea was constructed which consisted of a drum with four uniformly spaced offsets that were parallel to the axis of rotation. The lamp was rested on this drum so that as it turned, the lamp was raised and dropped at each step. This device was improved so that it became a simple and reliable test unit for lamps with G-6 or S-8 bulbs. Several manufacturers of ordnance lamps and equipment have purchased similar machines for use in their testing programs.

IV. LAMP DESIGN AND EVALUATION

Improving and evaluating lamps primarily used on military vehicles has been another of the principal efforts of the project. Initially the properties and structures of tungsten were investigated, followed by various attempts to strengthen selected lamps. A review of these efforts follows.

A. PROPERTIES AND STRUCTURES OF TUNGSTEN

Tungsten is used exclusively as the light source in incandescent lamps because of its high melting temperature combined with mechanical stability at high temperatures. Tungsten is not only temperature-sensitive but also structurally very sensitive. After cold-drawing, the structure is fibrous and the material exhibits high tensile strength and good ductility. The annealed structure consists of large grains which lend great brittleness to the metal, and the tensile strength is reduced significantly. The physical properties, thermal and electrical properties, and the structures and their properties will be given.

1. Physical Properties.—

Density

Presintered at about 1500°C	10.0 - 13.0 g/cc [29]
Sintered at 3000°C	16.5 - 17.5 g/cc
Swaged	18.0 - 19.0 g/cc
Drawn	18.0 - 19.3 g/cc

Modulus of Elasticity

$$E_t = E_o \left(\frac{T_s - T}{T}\right) 0.263$$

$$G_t = G_o \left(\frac{T_s - T}{T}\right) 0.263$$

where:

E_t = modulus of elasticity at a temperature T (°K)
E_o = 40,000 ± 1000 kg/mm^2 , 51.2 x 10^6 ± 1.28 x 10^6 psi
T = temperature in °K

T_s = melting temperature in °K (3653°K)
G_t = shear modulus at a temperature T (°K)
G_o = 17,100 300 kg/mm^2 , 21.9 x 10^6 $\pm$ 0.384 x 10^6 psi

Some values given by Bridgeman[30] for room temperature:

E = 39,400 kg/mm^2 (50.3 x 10^6 psi)
G = 15,350 kg/mm^2 (19.6 x 10^6 psi)

Poisson's ratio = 0.284

Isotropy of Tungsten

Elastic Constants:

	Bridgeman[30]	Wright[31]	
C_{11}	51.3	50.1	(x 10^{11} dynes/cm^2)
C_{12}	20.6	19.8	(x 10^{11} dynes/cm^2)
C_{44}	15.3	15.1	(x 10^{11} dynes/cm^2)

Using the condition for isotropy, 1/2 (C_{11}-C_{12}) = C_{44}, tungsten is fairly isotropic.

Tensile Strength[32]

Hard drawn wire 0.1 mm diam	426,000 psi
Hard drawn wire 0.05 mm diam	490,000 psi
Hard drawn wire 0.015 mm diam	670,000 psi
Annealed wire (recrystallized)	150,000 psi

Ductility[32] (measured as elongation)

Hard drawn	1 - 4%
Annealed	0%

For tensile strength and ductility as a function of temperature, see Figs. 15 and 16.

2. Thermal and Electrical Properties.—[32]

Linear Coefficient of Expansion (per °C)

30°C	4.44 x 10^{-6}
1030°C	5.19 x 10^{-6}
2030°C	7.26 x 10^{-6}

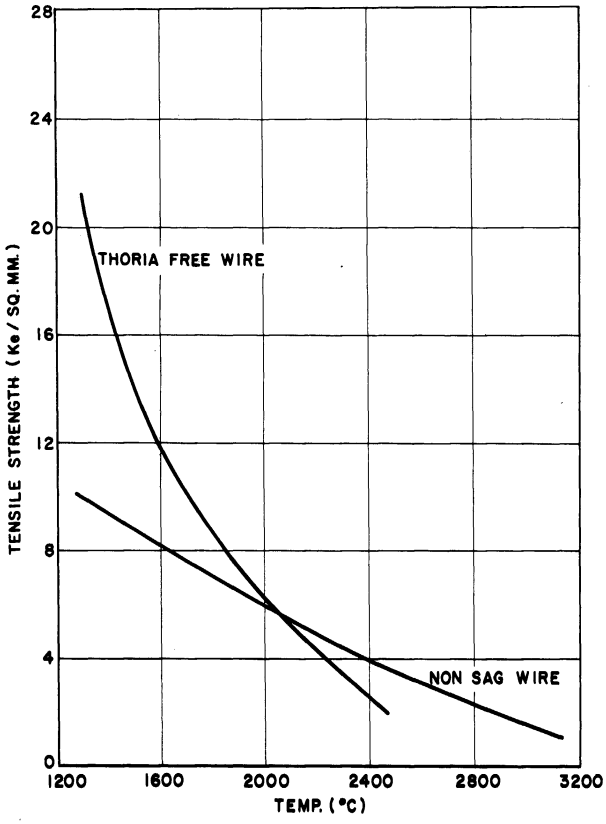

Fig. 15. The tensile strength of thoria free and nonsag tungsten wire as a function of temperature.

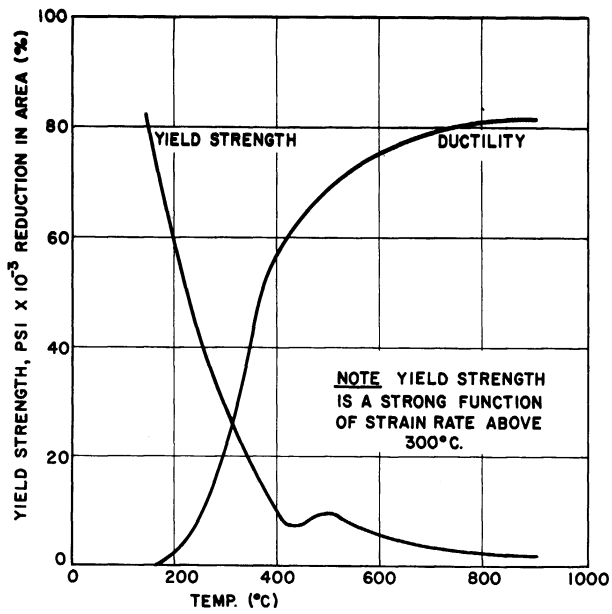

Fig. 16. The yield strength and ductility of tungsten wire as a function of temperature.

Heat Conductiviey

Ca./cm/sec/°C at 20°C	0.38

Specific Heat (cal/g/°C)

20 - 100°C	3.4×10^{-2}
1000°C	3.65×10^{-2}

Electrical Resistivity (microhm-cm)

20°C	5.5
750°C	25.5
1200°C	40
2400°C	85

3. Structures in Tungsten and Their Properties.—The properties of a tungsten wire are controlled not only by the composition and temperature of the wire, but also by the size and shape of the tungsten grains as revealed by metallographic inspection. The various structures of interest will be discussed.

Cold-working of tungsten produces a grain structure which is typical of metals that have just been cold-rolled or drawn. The grains are elongated and the structure exhibits a fibrous texture. In tungsten, this structure has a high tensile strength and is quite ductile. This condition persists until the metal is heated to the recrystallization temperature for a period of time at which point the structure becomes hard and brittle after the change in grain characteristics.

When tungsten reaches the recrystallization temperature, new, unstressed grains start to form which eventually grow and replace the cold-worked structure. The recrystallization temperature is affected by the degree of cold-work, composition (additions), and time. It can vary from 800°C for pure tungsten to over 2000°C for tungsten which contains large amounts of alumina and thoria. If a metal is either held at the recrystallization temperature for a long time or heated to higher temperature, some of the small grains will grow at the expense of others (the process of grain growth) and the structure becomes more coarse.

Unlike most metals, tungsten at room temperature is very brittle in the annealed condition. This means that the structures, which are considered desirable in most metals, become very detrimental in the case of tungsten as far as resistance to fracture is concerned. The fractures that occur are intercrystalline, that is to say, the fractures occur along grain boundaries. This means that a structure that has a grain-boundary path that runs directly

through the whole cross section of the wire will be very susceptible to fracture. A structure that is fine grained has a fairly easy path of fracture and the one in which the grains occupy the whole cross section of the wire is the most susceptible to fracture. A structure with interlocking grains would be preferable. The cold-worked structure is, of course, much better than any one of the recrystallized structures. Micro-photographs of these various grain structures may be observed in the first semiannual report for this project.

The tungsten in a lamp filament is not structurally homogeneous after it has once been burned. When a current is passed through the filament, there is a temperature distribution set up due to the cooling effect of the leads and/or the leg inserts (spuds). This temperature distribution is reflected by the structures of the various portions of the filament. Figure 17 shows the microstructures that exist near the point of filament attachment of a coiled-coil filament. In this figure the turn nearest the attachment point shows a cold-worked structure, and moving out into the incandescent portion of the filament there is a fine-grained zone followed by a coarse-grained region.

Fig. 17. Three successive turns of a filament showing cold-worked, fine-grained, and coarse-grained structures (250X).

B. INVESTIGATION OF TYPE 2416 LAMPS

The military service drive lamp, designated as number 4800 by the manufacturers, is a metal backed PAR 56 lamp with a type 2416 lamp for the light

source. This lamp (24V), which has two CC 6 filaments, is soldered into the aluminized metal back. The important aspects of the investigation and methods tried to improve the service of this lamp will be reviewed.

1. Determination of Failure Causes.—The determination of the cause for filament failure of the type 2416 lamp was investigated by three different approaches: metallurgical studies, theoretical analysis of mechanical constants, and observation of field failures.

Filament failure in the type 2416 lamp can be divided into two types; plastic deformation or fracture. Plastic deformation or sagging is a phenomenon that occurs when the structure is hot, and is caused by either an instability of structure in the filament or by exceeding the elastic limit of the hot tungsten. Usually when sagging occurs, a portion of the filament is shorted out, causing the remainder to burn for a short time at an overvoltage. Lamp failures of this nature are generally characterized by a blackened envelope, and the filament segments exhibit indication of arcing or welding together.

Fractures generally occur during the cooling period just after operation and when the filament is being excited by some physical force. These fractures appear within one or two primary turns of the leg insert in the recrystallized fine-grained structure. An example of such a fracture is shown in Fig. 18.

Fig. 18. Fracture in sample 921-2 (250X).

Observation of coiled-coil filaments when excited to resonance indicates the point of maximum flexure to be at or very near the weakest type of structure, i.e., the small grain recrystallized structure. The flexure point does not vary significantly with a change of hot or cold operation of the filament.

A number of service-drive lamp failures were shipped to the project from Fort Bragg, North Carolina. The lamps were made available to study the nature of these service failures and to compare them with those secured in the laboratory. Sixteen of these lamps had one filament failure and seven of the sixteen had lost both filaments.

The most common types of failure observed in this group was a short between two or more turns of the secondary or coiled coil. No consistent pattern could be observed as to the exact location of the short. Five filaments apparently failed from fatigue and in several cases a cold failure apparently occurred, followed by severe arcing.

The same sort of filament failures occur under controlled laboratory test conditions. In general, failure by shorting between turns occurs when the secondary coil pitch becomes nonuniform, either because of some defect in the lamp assembly at the factory or because the acceleration produced by the impact tester becomes large enough to cause distortion of the filament structure.

2. Principal Methods Used for Type 2416 Lamp Improvement.—It was pointed out previously that it was an unfortunate coincidence that in the filament the weakest type of structure occurred at the point of maximum flexure. The problem of improving the filament's vibration resistance resolved itself into one of separating the point of maximum flexure from the metallurgically weak structure. The problem was approached from the following angles:

1. construct a lamp with a totally recrystallized filament;
2. enclose the primary coil ends with an auxilliary coil to preserve the cold-worked structure at the point of flexure;
3. shock-mount the entire filament mount; and
4. operate at a lower efficiency and higher wattage.

Each of these methods of attack will be reviewed in their respective order.

a. Totally recrystallized filament.—From a metallurgical standpoint, a filament which has been fired at about 2200°C before mounting would be very desirable since firing at this temperature would produce a large-grain structure which should be stronger under repeated bending stresses. There are certain practical difficulties, however, which would have to be overcome before this process could be applied to routine lamp production.

Foremost among these are the added cost of heat treatment and the added difficulty of mounting the treated filaments since they are quite brittle.

Several type 2416 lamps having totally recrystallized filaments were assembled for testing purposes. These were similar in size and design to regular production lamps except for the omission of the minor filament. They were mounted on the Arsenal impact tester and given the normal testing cycle. These lamps failed much sooner than was expected, and on the basis of the performance of these few samples the practicability of improveing lamp life by the use of totally recrystallized filaments seems remote. It is conceivable that further experimentation with this mounting might produce the expected gains.

b. Use of auxiliary coils enclosing the ends of the primary coil.— The best metallographic structure to have at the point of maximum flexure is the cold-worked crystalline structure. It was felt that this structure could be preserved by enclosing the first few primary turns with an auxiliary coil. It was reasoned that this coil would direct enough current away from the main filament structure to keep the temperature below that necessary for recrystallization.

In response to our request, the project was provided with lamps in which slip coils had been included.[33] One group consisted of 50-watt coiled-coil filaments similar to those used in the type 2416 lamp with an RP 11 bulb and a single contact bayonet base. Four different wire sizes were used for the auxiliary coils enclosing the primary ends of the filament of this group, and some lamps without slip coils were included as controls.

The resulting tests indicated that filaments with the heavier slip coil had a longer life than those with lighter coils or with no slip coils. The results from the tests have to be qualified to some degree since the filaments were somewhat compressed and distorted, which tended to encourage hot failures rather than cold fractures. Subsequent metallographic inspection indicated that the slip coils did move the point of recrystallization further away from the point of mounting, and the auxiliary coil tended to have a grain structure equal to the filament (see Fig. 19). The heavier auxiliary coils seemed to gain their greatest advantage by their restriction of the filament when excited by violent forces. The primary ends of the filament were encased and stiffened so that the point of maximum flexure was moved inward.

A second group of type 2416 was provided, by another manufacturer, with short auxiliary coils slipped over the primary ends of the filament. Careful examination of these lamps showed that the physical structure of the filaments was apparently identical to the standard production type, except for the addition of slip-on coils. The slip-on coils were composed of

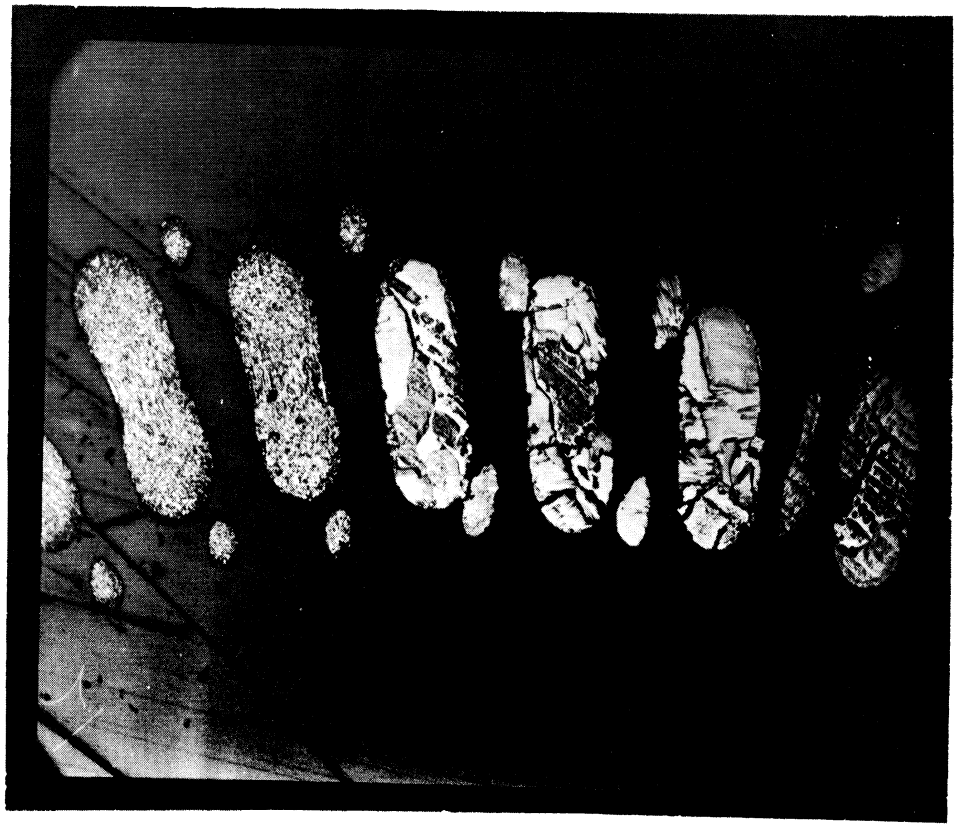

Fig. 19. Primary coil surrounded by an auxiliary coil.

tungsten wire with a diameter of about 75% of the filament-wire diameter, and extending for distances of from 3 to 7 turns beyond the weld at the point of attachment to the leads.

The results of these lamps when tested on the impact tester may be summarized as follows: Fatigue accounted for all but one failure, and the filaments showed little evidence of distortion at the end of the test. Comparison of these tests with others of standard 2416 lamps made by the same company did not show that sufficient benefit was achieved by the addition of auxiliary coils to warrant their use. The desired ruggedness in this lamp seemed to depend more on close control of the filament winding and mounting processes to secure uniformity and symmetry in the secondary coil spacing.

c. Experiments with shock mounting.—Several attempts were made to secure a form of shock mounting by attaching the filament between the ends of strips of flat tungsten ribbon. Filaments so mounted showed vibration at a resonant frequency close to the value obtained for a filament of standard construction, but with a reduced amplitude. This in itself was advantageous. There always was, however, a low-frequency vibration of the entire mount showing considerable amplitude, which of course was undesirable. Continued effort did not eliminate this detrimental low-frequency resonance.

d. Experiments with low-efficiency lamps.—A group of 50-watt lamps with coiled-coil filaments that had never been burned was flashed at various voltages ranging from 20 to 28 volts.[34] The filaments were then mounted, polished, and subjected to metallographic examination. It was noted that there was quite a consistent relationship between operating voltage and the location of the transition zone marking the boundary between cold-worked structure and coarse-grained structure. As the voltage was lowered the transition zone moved farther away from the leg insert.

A group of type 2416 lamps with filaments that had never been burned was selected for impact tests. Arrangements were made to operate one-third of the group on 28 volts and the remainder at 22 volts. They were placed on a stationary lamp-holder plate and burned at these voltages for 25 minutes. Then they were vibrated on the impact tester with the usual "on and off" operating cycle. Surprisingly, the number of failures in the set operating at subnormal voltage was appreciably greater than the failures at normal voltage. Nearly all the failures in the subnormal voltage group were due to sagging and shorting. Apparently these lamps were subjected to heavy physical forces before the crystalline structure had sufficient chance to become stabilized. If any conclusions are derived from this study, they will have to be tempered by the fact that only small numbers of lamps were involved.

e. Conclusion of type 2416 lamp experiments.—Demand for the type 2416 lamp has rapidly diminished because of the inability of the manufacturer to seal adequately this bulb into the metal-backed service drive lamp coupled with the introduction of a highly successful all-glass service drive lamp. The previously reported failures from Fort Bragg were mute evidence of the defects of this lamp. In addition to filament failure, other defects were:

1. water inside the reflector unit;
2. lens badly scratched and/or deformed;
3. reflector surface badly deteriorated; and
4. inner surface of bulb blackened considerably.

Besides these factors, the two major lamp producers discontinued their production of similar units for civilian use (6 and 12 volt ratings). Accordingly, study of this lamp was discontinued.

C. TYPE 1251 LAMP INVESTIGATION

The 1251 lamp, with a G-6 bulb, a 3-cp, 2c-2v supported filament, and butt-seal construction, has been used extensively by the project in impact tests on both the Arsenal and rotary-drum testers to evaluate tester components. As a consequence, numerous failures have been observed, and the failed lamps have been carefully inspected for the purpose of determining the probable cause of failure. A list of the most common types of failure follows:

1. Entanglement of the two filament segments with consequent shorting.
2. Fatigue breakage at one of the six attachment or support spots in the two filaments.
3. Sawing action of the support wire upon the filament.
4. Escape of the filament from the hook of the support wire, with consequent entanglement and shorting.

These observations were transmitted to interested lamp companies and it was suggested that improved resistance to impact might be attained in this type of lamp by expanding the lead tip spacing to a maximum, closing the hook of the support wire and shortening the coil length to a minimum.

One manufacturer responded by providing a group of lamps for test in which the first two of the above suggestions were carried out, and several racks of these experimental lamps were given mortality tests on the rotary-drum and Arsenal testers.[35] The usual procedure with regard to cycling, hot- and cold-cycle observations, and standard tester settings was followed. A definite reduction in mortality appeared to have been achieved by the altered mounting of the filament, although some sawing action at the central points of support could still be observed and there was still some evidence of shorting of filament segments.

The results of these tests suggested the possibility that further changes of this lamp might bring additional gains in lamp life. The suggested changes were the following:

1. use a larger envelope combined with a stem mounting to permit a greater spread of the leads;
2. redesign the mounting to eliminate the center support wire;
3. increase the filament-wire diameter to get a subsequent increase in wire strength; and
4. try different filament-wire types to determine if one has any advantage over another.

These observations were transmitted to representatives of cooperating lamp manufacturers. The problem was discussed in several conferences and ultimately several different forms emerged in an effort to strengthen the type 1251 lamps.

The first modified design received was a radical departure from the regular mount.[36] The important characteristics of this lamp were:

Base - single contact bayonet
Bulb - S-8
Filament - three-segment gapped filament clamped to four nickel lead wires in a stem press mount.

An inspection of these lamps indicated the natural frequency of each filament segment to be in the range of from 480 to 560 cps, and the leads to be 1400-2100 cps. Both of these figures were considerably above equivalent values for the regular 1251.

The lot was divided into two equal groups for impact testing on the rotary-drum tester with the filament oriented so that the two supports were beneath the current-carrying leads. The results of these two tests indicated that there was no over-all life improvement of these sample lamps as compared to the original design. The manufacturer evaluated a group of these special lamps on their own impact tester and confirmed these results.

The failure schedules from both series of tests indicated that better than 90% of the failure occurred during the cold cycle. About two-thirds of these failures occurred at or near the longer supports. Evidently the longer supports with their lower natural frequencies were a critical feature of the design. It was not unusual to find fractures midway in the coiled section. These fractures at random points indicated the possibility that slippage occurred between grains that had grown to occupy the entire cross-sectional area of the wire. The filament segments survived the tests without appreciable distortion or sagging and consequent entanglement.

It was concluded from these tests that:

1. there was no increase of lamp life when these samples were subjected to impact; and
2. some types of filament failures can be reduced by altered filament arrangements.

This modified design, though no over-all life gains were experienced, did indicate sufficient promise to warrant testing a second group. The second group was received with the following changes:

1. the current-carrying leads and supports were interchanged;
2. all supporting members were reduced to a minimum length.

Impact tests using these lamps indicated that these changes had strengthened the lamp. The failures that did occur were mostly fractures located on the segments attached to the current-carrying leads. As in the previous group, there was no evidence of plastic deformation and/or shorting of the filament segments. Work with this 3-cp lamp was discontinued because:

1. the gains in physical strength were not as great as anticipated,
2. the lamp was relatively expensive to manufacture, and
3. the physical size was not compatible with presently used equipment.

Another group of type 1251 lamps with an altered construction was received from a cooperating lamp maker.[37] A double-anchored filament was the only deviation of this sample lot from the regular lamp. It was hoped that these two anchors (i.e., two supports) would strengthen the lamp by

1. dividing the filament into three segments, thereby raising the resonant frequency of each segment,
2. preventing the entanglement of the filament segments by more positive separation methods, and
3. eliminating possible escape of the filament from the anchor by better control of the entire coil.

The lamp illustrated in Fig. 20 is typical of this lot of lamps. The characteristics of these lamps were:

Base - single contact bayonet
Bulb - G-6
Filament - 2C - 2F

It was noted from an inspection of these lamps that they appeared similar to a regular 1251, except as previously noted, and that the beads of the two mounts were quite widely separated. This separation was enough (about 1/8 inch) to isolate completely each mount from the other. It was also noted that the anchors responded to a 400-cps excitation, but in only one case was it possible to excite a coil segment at its resonant frequency.

The lot of lamps was divided into three equal groups for evaluation on a rotary-drum tester. When the mortality curves were compared to a previous range established by a series of tests on a rotary-drum tester using 1251 lamps supplied by the same manufacturer, it was quite evident that the life expectancy of these lamps had been increased by a factor of from 2 to 3.

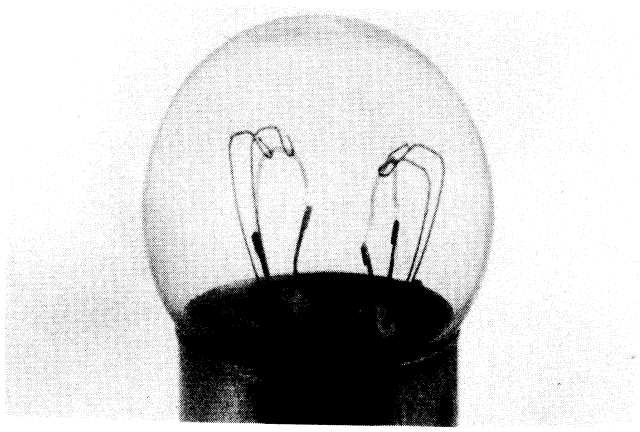

Fig. 20. Modified 1251 lamp with double-anchored filaments.

The failure schedules indicated almost a complete absence of hot failures during these tests. Undoubtedly the two anchors controlled the filaments so effectively that no shorting of the filaments could occur. Although no major entanglements occurred, in many cases the coil was stretched and distorted near the supports so that some individual turns did short. About 75% of the failures occurred at or very near the anchor which suggests a sawing action of the anchor on the filament. The remaining fractures were located centrally on one of the three segments.

This special lot of 1251 lamps exhibited marked improvement over the regular lamp produced by the same manufacturer when evaluated in terms of shock and vibration. Since this lamp was physically interchangeable with the presently used type 1251 lamp and could be manufactured readily, a second group was requested from the manufacturer for additional testing. Mortality results of the second lot were very comparable to the original group.[38]

A conference with representatives of a second cooperating lamp company produced another series of modified 1251 lamps, which, it was hoped, would increase the resistance of the lamp to shock.[39]

Modified samples of this lamp were supplied to the project for evaluation and were as follows:

A—a lamp like the present 1251, except without support wires and with widest possible lead tip spacing (illustrated by Fig. 21).

B—a lamp like the present 1251, except with a rigid copper support clamped to a two-segment gapped filament (sample illustrated by Fig. 22).

C—a lamp with a four-wire, flange-stem construction with unsupported 1251 filaments, mounted in a B-6 bulb (sample illustrated by Fig. 23).

The group A lamps were the first to be subjected to impact tests. Almost immediately the hot filaments became distorted, but after a few moments little or no further distortion took place. When the four mortality tests were compared to a previous series of tests on the rotary-drum tester, using type 1251 lamps supplied by the same manufacturer, it was readily noted that the mortality rate of these lamps had been decreased by a marked degree. By scrutinizing the failure schedules, several interesting things became evident. The hot failures had been reduced to a very small number; of the 47 recorded failures, only one of these was the result of a filament entanglement and shorting. All the remaining failures (42) were during the cold cycle and usually at random points on the coiled section of the filament.

From these tests it seemed evident that the elimination of the support dramatically decreased the mortality rate and changed the character of filament failure to predominantly cold failures. After short, severe service, the filament did become distorted from the original shape, but this seemed to have no harmful effect on its impact resistance.

The manufacturer was requested to supply another group of similar lamps for field and laboratory tests. Impact tests of this second group proved to be consistent with the original tests.[40]

The impact evaluation of the B lamps was carried on in a similar manner. When the tests were compared to a previously established range by testing a number of regular 1251 lamps, it was quite evident that the B was stronger than the regular lamp. Only during the early portion of the test did the mortality rate approach or equal that previously established. After this initial heavy mortality, the rate of failures was reduced to a very nominal figure.

The failure schedules of these four tests revealed some rather inconsistent facts. In the first test, seven of the nine failures occurred during the hot phase of the cycle, while in the third test only one of the eight failures occurred during this period. The filaments of these hot failures had few if any of the characteristics of previous hot failures of the other tests (i.e., filament entanglement and shorts). A typical hot failure had the break at a point between the lead wire and the coil and the average cold failure had the break in the coiled section of the filament.

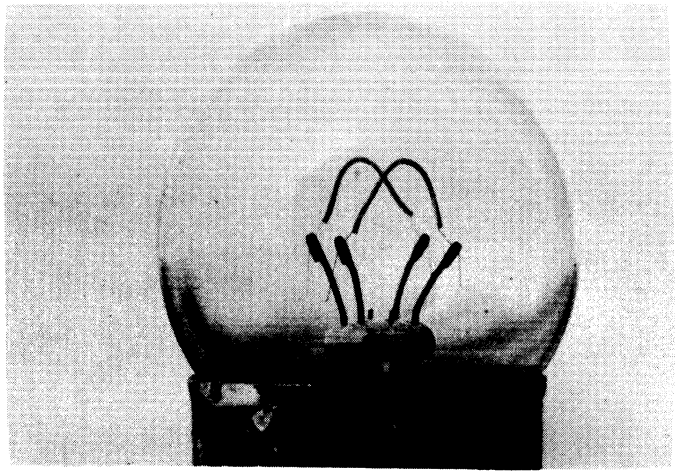

Fig. 21. Modified 1251 lamp with an unsupported filament.

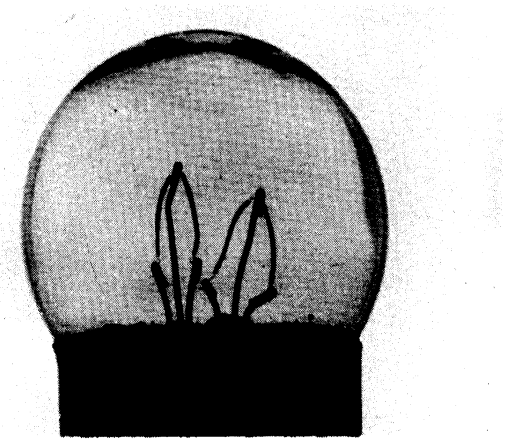

Fig. 22. Modified 1251 lamp with a rigid support clamped to a two-segment gapped filament.

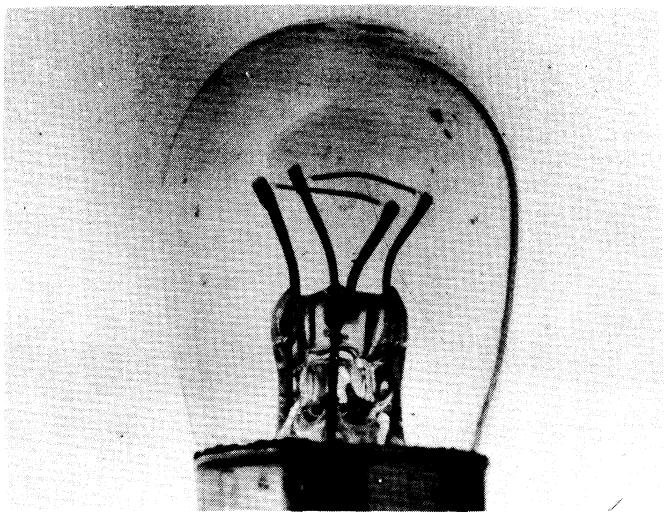

Fig. 23. A lamp with four-wire, flange-stem construction mounted in a B-6 bulb with unsupported 1251 filaments.

These tests indicated that there were a number of weak lamps in each group which failed quite early. This was shown by the fact that 50% of the failures occurred in the first quarter of the test. The most plausible reason for the numerous early failures was that the mounts were manually assembled and probably were subject to more manufacturing differences. Except for this shortcoming, the lamps seemed mechanically strong and showed a definite improvement over the regular 1251 lamp.

The test procedure for the C lamps was similar to those for the A and B tests, except that an alternate lamp holder was used to compensate for the envelope size. When these mortality results were compared with test results of regular 1251 lamps, a marked reduction in lamp mortality was noted. More than 90% of the failures occurred during the cold period, and the fractures were located at random locations in the coil. It was also notable that very little filament distortion occurred during the test.

Two lamp manufacturers supplied the project with a quantity of type 1251 lamps with filaments wound of a thoriated tungsten wire. Each of these manufacturers had used this wire successfully for other low-efficiency lamps.

The lamps from both manufacturers had a normal configuration, and the other characteristics were equal to the published specifications. Each group was impact-tested on the rotary-drum tester in the usual manner. Almost immediately it became evident that these lamps would be able to withstand the effects of this test. At the end of 480 minutes of testing, only one or two failures were experienced, and practically no distortion of the filament segments was evident.

The metallographic structure of these lamp filaments was examined. The polished sections revealed that the filament wire had recrystallized but that there was practically no evidence of grain growth in these samples that had been burned 16 hours. This was in sharp contrast to similar examination of previous lamps with higher mortality rates, that indicated grain growth was very rapid. Normally these grains filled the entire wire cross section and fractures frequently occurred in between these large grains. It seems evident that the control of this grain growth definitely strengthened the filaments. However, it should be noted that these filaments were examined after only 16 hours of burning, and the grain structure may later enlarge and become similar to the structure described in the regular filaments.

The success of the type 1251 lamp with unsupported filaments (type A) was encouraging enough to request the manufacturer to supply the project with a group of type 623 lamps (rated at 6 cp) in which the same unsupported filament structure was to be employed.[41] The lamps of this group were tested on the rotary-drum impact tester, following the standard procedure for

such tests. The spread of the five tests seemed quite large, but when the test data were studied statistically, the machine was found to be consistent in each test. The failure schedules showed that filament failure occurred chiefly during the cold portion of the cycle, with the fractures appearing at random locations. Filament entanglement was almost completely eliminated. Initial distortion occurred, but did not grow noticeably worse as the test continued.

Figure 24 compares the performance of this group with that of some type 623 lamps of standard design and with the unsupported 1251 lamp. It is quite evident that the unsupported type 623 seems stronger than the standard 623 and also stronger than the unsupported 1251.

The possibility of substituting this lamp for the regular type 1251 in extremely rough service applications has been suggested.

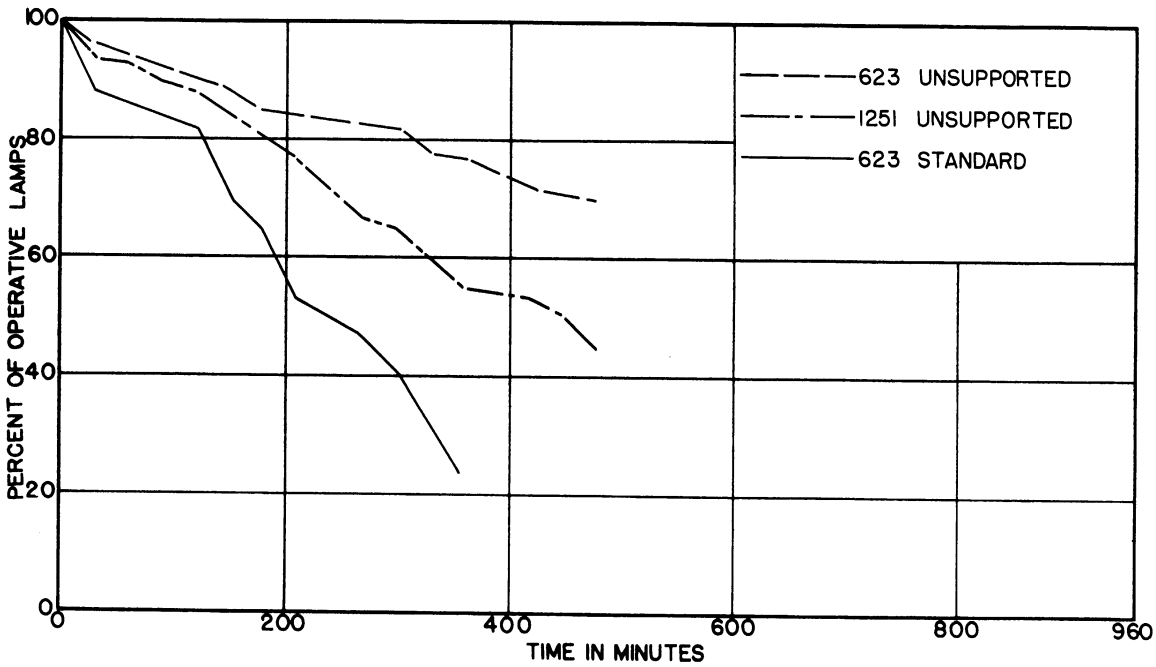

Fig. 24. Comparative mortality results of type 623 and 1251 lamps with unsupported filament and type 623 standard lamps tested equally on the rotary-drum impact tester.

D. FIELD TEST OF TYPE 1251 LAMPS

1. Lamps Available for Test.—When it was learned that arrangements had been made to mount a group of lamps on a fleet of military vehicles about to be operated at the Yuma Test Station for tire and lubrication tests, the opportunity was utilized as a means of determining the relative

durability of several types of 3-cp lamps under field-service conditions.[42] At the same time, the test data thus secured in the field under conditions subject to some control might be compared with test data obtained on the same types of lamps in the laboratory to determine if any correlation existed between the two types of tests. It was also evident that the experience gained from these field tests might be utilized for additional field tests at some future date.

Three types of 3-cp lamps were selected for the proposed tests—a standard type 1251, a lamp with a double-anchored filament (see p. 39), and a lamp with an unsupported filament (see p. 41). Through the cooperation of two lamp manufacturers, sufficient quantities of these types of lamps were secured to permit each special type to be divided into two groups. One group was subjected to routine laboratory tests on a rotary-drum tester and the other group was shipped to Yuma for installation on the vehicles. Results of the laboratory tests of the special lamps are described on pages 39 and 40. The available standard lamps were the remnants of a large homogeneous group from which considerable laboratory mortality experience had been accumulated.

2. Field Test Program.—Arrangements were made with research and development groups at the Detroit Arsenal to equip the military vehicles of a tire-test fleet and a lubrication-test fleet with 3-cp lamps taken from the three groups just discussed. The participating units in these tests included wheeled vehicles ranging from 3/4 to 5 tons and several different tracked vehicles. The tire-test fleet operated on cross-country terrain, gravel roads, and pavement, while the lubrication fleet was confined to paved roads. A definite systematic schedule was used for the mounting of all test lamps.[43] The operation of the lamps during vehicle operation was also carefully programmed for the most effective schedule.

3. Performance of the Test Lamps.—The performance of these three lamp types on the two fleets of wheeled vehicles was not as expected. The total number of lamp failures was too small to obtain significant mortality curves. It is of interest, however, that there were no failures among the cold lamps and most of these showed very little filament distortion. Of the lamps operated hot, the standard type 1251 seemed to show more severely distorted filaments than the other two types, although the number of actual failures was small. Almost 80% of the lamp failures occurred at the left tail-lamp position; the size or weight of the vehicle did not seem to influence the failure rate.

The average miles per failure of all failed lamps was 1129, ranging from 158 to 2699. For the standard type 1251, the average miles per failure was 1079; the unsupported lamp, 1363; and the double-anchored lamp, 875. No data were available as to what type of road caused the failures.

The tire fleet accumulated a total mileage of 26,291 and had 18 lamp failures, or 78% of all failures on all wheeled vehicles of both fleets. The location having the greatest number of failures was the left tail lamp, which is significant, since the probability of this distribution is less than .01. There is no obvious reason for this location to produce such a mortality.

The lubrication fleet of 16 vehicles was operated only on paved roads for a total of 160,056 miles. During this operation only five failures were observed, one standard lamp and four unsupported lamps, which were all located at hot-lamp locations. In other words, this fleet operated 32,000 miles for every failure in comparison to 685 miles for the tire fleet. The most logical explanation seems to be that a truck operated only on paved roads probably will not provide sufficient excitation to cause either failure by fatigue or ultimate failure by plastic deformation of the filament. It should be noted that four of the five failures appeared to be the result of fatigue and also that three of these were at the left tail lamp.

The two tracked vehicles used in the lubrication fleet had lamps mounted and operated similarly to those of the wheeled vehicles. The average speeds for cross country, gravel, and paved roads were 10, 20, and 25 mph, respectively.

One M48, which was described in the field report as "subject to extreme vibration," had 20 lamps installed during the course of the test, with none surviving whether operated hot or cold. Examination of the failures indicated that the lamps had been subjected to extremely violent forces. The two front marker lamps, which are the farthest from the engine, seemed to survive the longest.

The second M48 had fewer lamp failures and each lamp accrued far greater mileage before failure. Possibly some of this difference can be attributed to the fact that the rear lamps, which are located nearest the engine, were shock-mounted. Two lamps mounted in these housings and operated cold were each able to survive about 2300 miles of operation. The two front marker lamps, which were not shock-mounted, also showed a relatively long life in comparison to those mounted in a similar position on the other vehicle. The inspection of the returned lamps of this vehicle showed that the failures resembled those previously described.

Data obtained from tests on only two tracked vehicles seem insufficient to justify any attempt to classify failures by lamp types. It is obvious, however, that lamp maintenance on tracked vehicles is a real problem, probably calling for improved shock mounts at all locations.

4. Summary of Field-Test Results.—As might be expected in any field test, there were numerous variables in the test conditions in spite of conscientious efforts to control all conditions. One variable, the voltage of each vehicle, was much lower than expected and conditions did not permit correcting this situation. Voltage readings, taken at the voltage regulator after about 30 minutes of motor operation, averaged 26.7 volts. It was pointed out earlier that the operation of lamps below their rated voltage was not necessarily beneficial and probably a detriment when the filaments are subjected to shock and vibration.

During the field tests, lamps at certain locations on the vehicles were burned continuously while the vehicles were operated; at other locations the lamps were off or cold continuously. It is our belief that the absence of standard cycling tends to produce a significant increase in lamp life as affected by shock and vibration. In laboratory testing, using the standard cycle of 25 minutes "on" and 5 minutes "off," the majority of lamp failures occurred at the beginning of the cold or "off" portion of the cycle. These laboratory tests indicated the unsupported lamp to be stronger than the double-anchored or the standard lamps, respectively. In later impact tests, where the lamps were burned continuously, all had a lower mortality rate, and the double-anchored lamp was stronger than the standard or unsupported lamps, respectively. Therefore, if the laboratory and field tests had been operated under more equal conditions regarding the cycling of the lamps, the results might have been more nearly equal.

These tests, though inconclusive, point out the value of an accelerated laboratory test. Even though the lamp test was incidental to the operation of these test fleets, there was a considerable expenditure of effort to get the test results. If the test can be controlled and the trucks are to be operated on rough roads or terrain, the excitation may be sufficient to cause filament failure. The operation of a tracked vehicle does provide more than enough shock excitation to cause significant lamp failure rates.

E. ANALYSIS OF SINGLE- AND DOUBLE-COILED FILAMENTS

When a lamp filament is subjected to an impact, it vibrates about its equilibrium position mainly in its lowest mode of natural bending vibration. The amplitude, frequency, and shape of the vibration depend on the surrounding conditions. The conditions are the stiffness and spacing of the supports, the geometry of attachment to the supports, the size of wire in the filament, and the type of winding of the filament, single helix or double helix.

The filament is essentially built into the supports at both ends. A uniform beam, built in at both ends, with a transverse impact velocity V moves with a motion which can be described as the lowest mode of free lateral bending.

$$y = \frac{8}{n^3}\frac{V\ell^2}{a}\left[(\cosh n - \cos n)\left(\sinh n\frac{x}{\ell} - \sin n\frac{x}{\ell}\right) - \right.$$

$$\left.(\sinh n - \sin n)\left(\cosh n\frac{x}{\ell} - \cos n\frac{x}{\ell}\right)\right]\sin\frac{n^2 a}{\ell^2}t \quad ,$$

where

y = lateral displacement, a function of position x and time t,
V = impact velocity,
$a = \sqrt{\frac{EI}{(A\gamma/g)}} = \sqrt{\frac{\text{bending stiffness modulus}}{\text{mass per unit length}}}$,
n = the lowest root of the frequency equation of the beam = 4.73, and
ℓ = length of beam between supports.

The bending moment distribution is

$$\frac{\partial^2 y}{\partial x^2} = \frac{8}{n}\frac{V}{a}\left[(\cosh n - \cos n)\left(\sinh n\frac{x}{\ell} + \sin n\frac{x}{\ell}\right) - \right.$$

$$\left.(\sinh n - \sin n)\left(\cosh n\frac{x}{\ell} + \cos n\frac{x}{\ell}\right)\right]\sin\frac{n^2 a}{\ell^2}t$$

$$\frac{\partial^2 y}{\partial x^2} = \frac{8}{n}\frac{V}{a}X\sin\frac{n^2 a}{\ell^2}t \quad ,$$

where X represents the function of x in the brackets.

At $x = 0$ and $x = \ell$ $\quad X = -115.4$

at $x = \ell/2$ $\quad X = +33.0$

$$\frac{\left(\frac{\partial^2 y}{\partial x^2}\right)_{0,\ell}}{\left(\frac{\partial^2 y}{\partial x^2}\right)_{\ell/2}} = -3.5$$

The bending moment is

$$M = EI\frac{\partial^2 y}{\partial x^2}$$

$$M = EI \frac{8}{n} \frac{V}{a} X \sin \frac{n^2 a}{\ell^2} t \quad .$$

The maximum bending stress is

$$\sigma_{max} = \frac{MC}{I} = \frac{C}{I} EI \frac{8}{n} \frac{V}{a} X \sin \frac{n^2 a}{\ell^2} t$$

$$\sigma_{max} = \frac{d}{2} E \frac{8}{n} \frac{V}{a} X \sin \frac{n^2 a}{\ell^2} t \quad .$$

If the value of a is inserted,

$$\sigma_{max} = 16 \frac{V}{n} \sqrt{\frac{E\gamma}{g}} X \sin \frac{n^2 a}{\ell^2} t \quad .$$

The impact stress is proportional to the impact velocity and it is <u>independent</u> of the diameter of the beam (assuming it to be round).

The natural frequency of the lowest mode of vibration is

$$f = \frac{n^2 a}{2\pi \ell^2} = \frac{1}{2\pi} \frac{n^2}{\ell^2} \sqrt{\frac{EI}{(A\gamma/g)}}$$

1. <u>Application to Coiled Filaments</u>.—The lamp filaments are not beams of constant cross section. They are single helical windings or double helical windings. These windings can be treated like beams of uniform cross section by calculating suitable values for EI and $A\gamma/g$.

Primary Coils

Tension $\quad \frac{(EA)_1}{\ell_1} = \frac{4}{\pi} \frac{GJ_1}{N_1 D_1^3} \; ; \quad (EA)_1 = 4 \frac{p_1}{\pi D_1} \frac{GJ_1}{D_1^2}$ lb

Twist $\quad \frac{(GJ)_1}{\ell_1} = \frac{5}{4\pi} \frac{GJ_1}{N_1 D_1} \; ; \quad (GJ)_1 = \frac{5}{4} \frac{p_1}{\pi D_1} GJ_1$ lb in.^{2}

Bending $\quad \frac{(EI)_1}{\ell} = \frac{10}{9\pi} \frac{GJ_1}{D_1 N_1} \; ; \quad (EI)_1 = \frac{10}{9} \frac{p_1}{\pi D_1} GJ_1$ lb in.^{2}

Secondary Coils

Tension $\quad \frac{(EA)_2}{\ell_2} = \frac{5}{\pi} \frac{p_1}{\pi d_1} \frac{GJ_1}{N_2 D_2^3} \; ; \quad (EA)_2 = 5 \frac{p_1}{\pi d_1} \cdot \frac{p_2}{\pi d_2} \cdot \frac{GJ_1}{D_2^2}$ lb

Twist $\quad \dfrac{(GJ)_2}{\ell_2} = \dfrac{25}{16\pi}\,\dfrac{p_1}{\pi D_1}\,\dfrac{GJ_1}{N_2 D_2}$; $\quad (GJ)_2 = \dfrac{25}{16}\,\dfrac{p_1}{\pi D_1}\,\dfrac{p_2}{\pi D_2}\,GJ_1$ lb in.^{2}

Bending $\quad \dfrac{(EI)_2}{\ell} = \dfrac{20}{17\pi}\,\dfrac{p_1}{\pi D_1}\,\dfrac{GJ_1}{N_2 D_2}$; $\quad (EI)_2 = \dfrac{20}{17}\,\dfrac{p_1}{\pi D_1}\,\dfrac{p_2}{\pi D_2}\,GJ_1$ lb in.^{2}

Primary Coil Mass per Unit Length

$$\left(\frac{A\gamma}{g}\right)_1 = \frac{\pi D_1}{p_1}\,\frac{\pi d_1^{\,2}}{4}\,\frac{\gamma}{g} \qquad \frac{\text{lb sec}^2}{\text{in.}^2}$$

Secondary Coil Mass per Unit Length

$$\left(\frac{A\gamma}{g}\right)_2 = \frac{\pi D_1}{p_1}\,\frac{\pi D_2}{p_2}\,\frac{\pi d_1^{\,2}}{4}\,\frac{\gamma}{g}\,\frac{\text{lb sec}^2}{\text{in.}^2}$$

In these formulae

$J_1 = \dfrac{\pi d^4}{32}$

d_1 = diam of wire
D_1 = mean diam of primary coil
D_2 = mean diam of secondary coil
p_1 = pitch of primary coil
p_2 = pitch of secondary coil
G = shear modulus of wire = 21×10^6 lb/in.^{2} for tungsten
γ = specific weight of wire = 0.7 lb/in.^{3} for tungsten
g = acceleration of gravity

2. <u>Some Comparative Values</u>.—

6-volt 45-watt filament

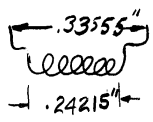

$$(EI)_1 = \frac{10}{9}\,\frac{p_1}{\pi D_1}\,\frac{\pi d_1^{\,4}}{32}\,G$$

$$\left(\frac{A\gamma}{g}\right)_1 = \frac{\pi D_1}{p_1}\,\frac{\pi d_1^{\,2}}{4}\,\frac{\gamma}{g}$$

d_1 = .009675 in.

p_1 = .0186 in.

D_1 = .036125 in.

$$\frac{(EI)_1}{(A\gamma/g)_1} = \frac{10}{9}\left(\frac{p_1}{\pi D_1}\right)^2 \frac{d_1^{\,2}}{8}\,\frac{Gg}{\gamma} = 412\ \frac{\text{in.}^4}{\text{sec}^2}$$

$$= \frac{10}{72} \times 27.25 \times 93.5 \times 11.6 = 4120\ \frac{\text{in.}^4}{\text{sec}^2}$$

$$\frac{p_1}{\pi D_1} = .165 \qquad \frac{Gg}{\gamma} = \frac{21 \times 10^6 \times 387}{.7} = 11{,}600 \times 10^6 \ \frac{\text{in.}^2}{\text{sec}^2}$$

$$\left(\frac{p_1}{\pi D_1}\right)^2 = .02725 \qquad f = \frac{1}{2\pi}\frac{n^2}{\ell^2}\sqrt{412} = \frac{1}{2\pi}\frac{(4.73)^2}{625 \times 10^{-4}}\,64.0$$

$$d^2 = 93.5 \times 10^{-6} \text{ in.}^2 \qquad f = 3630 \text{ cps}$$

$$a = 64 \ \frac{\text{in.}^2}{\text{sec}}$$

12-volt 50-watt filament

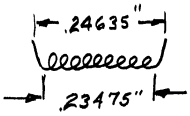

$$\frac{(EI)_1}{(A\gamma/g)_1} = \frac{10}{9}\left(\frac{p_1}{\pi D_1}\right)^2 \frac{d_1^{\,2}}{8}\frac{Gg}{\gamma}$$

$$= \frac{10}{72}\,5.72 \times 44.7 \times 11.6$$

$$= 412 \ \frac{\text{in.}^4}{\text{sec}^2}$$

$$d = .00667 \text{ in.}$$

$$p_1 = .0109 \text{ in.}$$

$$D_1 = .04633 \text{ in.}$$

$$\frac{p_1}{\pi D_1} = .0758 \qquad f = \frac{1}{2\pi}\,\frac{(4.73)^2}{550 \times 10^{-4}}\,20.3$$

$$\left(\frac{p_1}{\pi D_1}\right)^2 = .00572 \qquad f = 1310 \text{ cps}$$

$$d_1^{\,2} = 44.7 \times 10^{-6} \text{ in.}^2$$

$$a = 20.3 \ \frac{\text{in.}^2}{\text{sec}}$$

3. <u>Bending Moment at End of Filaments</u>.—

$$M = EI\,\frac{\gamma^2 y}{\gamma x^2} = EI\,\frac{8}{n}\,\frac{V}{a}\,X \sin\frac{n^2 a}{\ell^2}\,t$$

at the end X = 115.4 (where the sign is ignored).

The maximum bending moment at the end of an impacted filament is

$$\frac{8 \times 115.4}{n}\ EI\ \frac{V}{a} = M_{max}$$

$$M_{max} = \frac{923.2}{4.73} V \; EI\sqrt{\frac{(A\gamma/g)}{EI}} = 194 \; V \sqrt{EI \cdot \frac{A\gamma}{g}}$$

For a primary coil filament

$$M_{max} = 194 \; V \sqrt{(EI)_1 \left(\frac{A\gamma}{g}\right)_1} \text{ lb in.}$$

$$(EI)_1 = \frac{10}{9} \frac{p_1}{\pi D_1} \frac{\pi d_1^4}{32} G$$

$$\left(\frac{A\gamma}{g}\right)_1 = \frac{\pi D_1}{p_1} \frac{\pi d_1^2}{4} \frac{\gamma}{g}$$

$$(EI)_1 \left(\frac{A\gamma}{g}\right)_1 = \frac{10}{9} \frac{\pi^2}{128} d_1^6 \frac{G\gamma}{g} = \frac{10\pi^2}{1152} \frac{G\gamma}{g} d_1^6$$

$$\frac{G\gamma}{g} = \frac{21 \times 10^6 \times .7}{387} = \frac{14.7 \times 10^6}{387} = \frac{14.7}{3.87} 10^4 = 38{,}000 \frac{\text{lb}^2 \text{ sec}^2}{\text{in.}^6}$$

$$(EI)_1 \left(\frac{A\gamma}{g}\right)_1 = 3260 \; d_1^6 \text{ lb}^2 \text{ sec}^2$$

$$\sqrt{(EI)_1 \left(\frac{A\gamma}{g}\right)_1} = 57 \; d_1^3 \text{ lb sec}$$

$$M_{max} = 11{,}050 \; d_1^3 \; V \text{ lb in.}$$

This moment can act as a bending moment or a twisting moment on the wire at the support.

Bending stress $\sigma = \frac{Mc}{I} = \frac{32}{\pi} \frac{M}{d^3} = \frac{32}{\pi} 11{,}050 \; V = 113{,}000 \; V \text{ lb/in.}^2$

Shear stress $T = \frac{Mc}{J} = \frac{18}{\pi} \frac{M}{d^3} = \frac{18}{\pi} 11{,}050 \; V = 56{,}500 \; V \text{ lb/in.}^2$

Note that in impact loading the stress at the ends of the filament (for the first swing of vibration after the impact) is <u>independent</u> of the length of the coil and <u>independent</u> of the diameter of the wire. Also note that the stresses are very high for reasonable values of V. In our impact tester

V = 5 in./sec to 10 in./sec. These velocities lead to bending stresses in the order of 565,000 to 1,130,000 lb/in.^{2} These stresses are obviously too high. But other conditions associated with the filament mounting always make the actual stresses lower.

1) Any flexibility in the whole mounting system always reduces the stress.
2) The solution for the impacted beam used here only takes into account the first mode of motion. The addition of the effects of higher modes may reduce stress.
3) The relative stiffness of the working filaments and the terminal supports is very important in determining the actual maximum stress.

The theory does not account for the fact that short stiff filaments never break on the kind of impacts given in our tests, whereas the more flexible and heavier filaments always break. To account for actual testing experience, additional studies will have to be made on the effects of the end conditions of the filaments. This additional work is necessitated by two facts:

1) this theory gives natural frequencies that are too high;
2) this theory gives stresses that are too high.

The effects of the end conditions will lower both quantities.

F. SUMMARY

The properties of tungsten have been outlined and their relationships to the lamp filaments described. The location and the characteristics of the various metallographic structures found in tungsten are discussed.

The efforts to strengthen the type 2416 lamp against shock and vibration are explained. This program was discontinued when this lamp was replaced by an all-glass unit.

The numerous efforts to strengthen the type 1251 lamp are narrated. The project's efforts were chiefly directed at a mechanical rearrangement of the components to prevent the entanglements of the filament segments. This program was relatively successful in several cases, but the lamp makers themselves provided the largest gain when several built lamps with a thoriated tungsten wire. These lamps appear to get their impact resistance by a control of the grain growth in the filament.

Several special lamps were tested in the field in comparison with a standard lamp. The results from these tests were very limited, but they did show that similar tests would have to be performed on vehicles that were to be given the hardest service and that the cycling of the laboratory tests would have to be equal to the field conditions.

V. MISCELLANEOUS TOPICS

A. PAR LAMP TESTER

Manufacturers and users of PAR type automotive lamps have long felt a need for a device to evaluate the resistance of these lamps to shock and vibration. Most test devices used to date have been makeshift arrangements, whereby a machine designed for another purpose was modified to accommodate these lamps. The greater share of these devices have not been entirely successful, and none has been accepted for any broad testing programs. Effort has been applied by the project to determine the feasibility of an impact-test device for this type of lamp.

The basic concepts for impact-testing miniature lamps are applicable to the testing of PAR lamps; i.e., the necessary acceleration of the lamp filament can be obtained by repeatedly dropping the lamp onto a relatively inelastic surface and letting it bounce. This impact will then excite the components of the filament structure at their own natural frequency. Figure 25 shows the movement of six separate components of the filament structure of an all-glass service drive lamp that was excited by impact. It can be noted that the response for each component is different. The amplitude of deflection for each section will vary according to its natural frequency and can be expressed as approximately

$$\Delta \approx \frac{\sqrt{2gh}}{2\pi f}$$

where

h = drop

and

f = frequency of the component.

To study the behavior of a service drive lamp, complete filament mounts from type 4860 lamps were observed on an electro-magnetic shaker. These filaments responded to frequencies between 150-250 cps and the leads, between 350-500 cps. The structures of 12-volt lamps, type 5400, were examined with the same conditions. Generally, the resonant frequency of the filament was about twice that of the leads; i.e., the leads responded in a range of 375-450 cps while the filaments responded to about 800 cps. It was felt that these frequencies were all low enough so that similar structures mounted in PAR type lamps could be impact-tested in reasonable test periods.

The first attempts at impact-testing a PAR type lamp were performed by modifying the rotary-drum tester to accommodate a PAR 56 lamp. A special

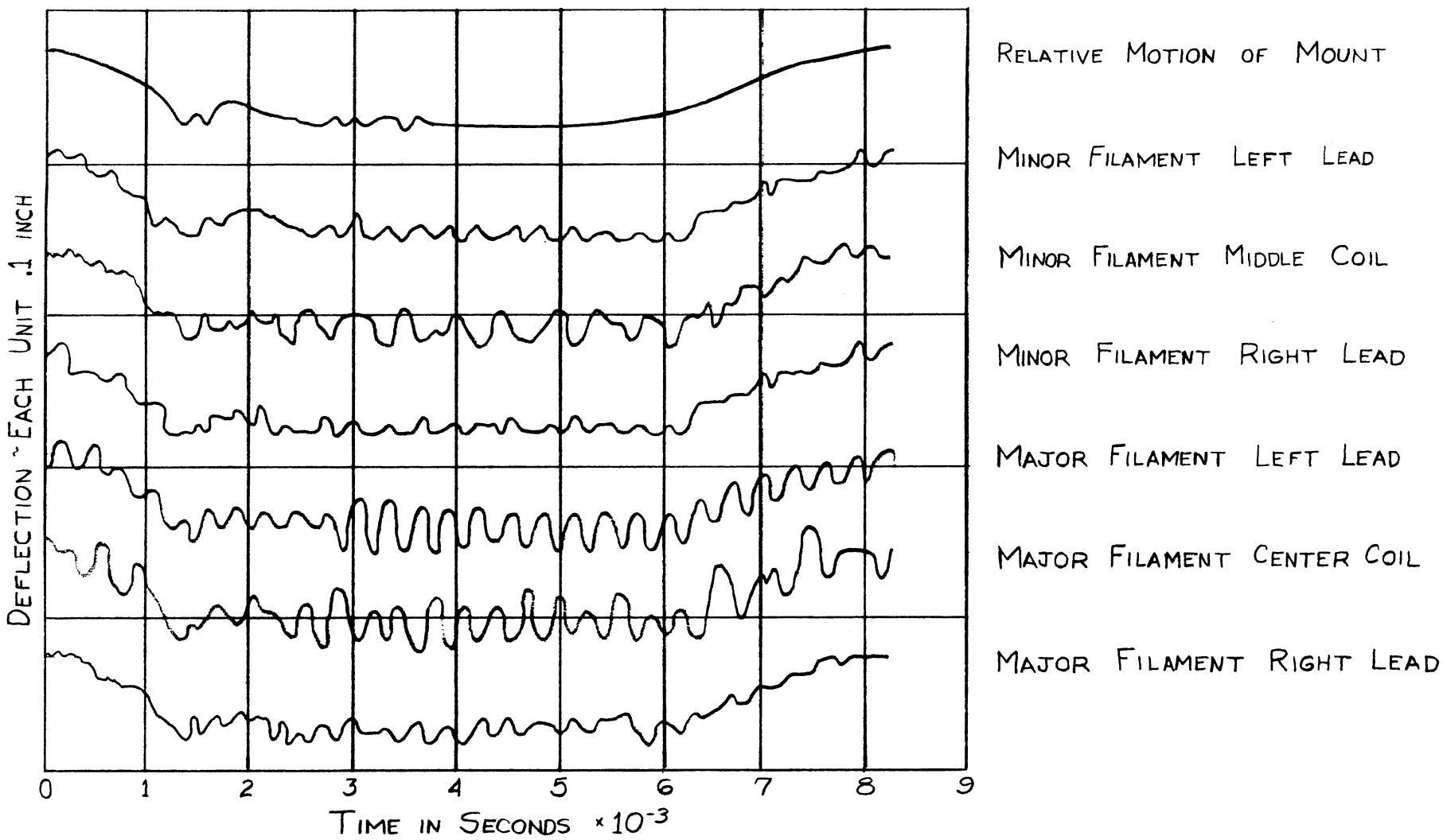

Fig. 25. The relative motion of various sections of the filament mount of an all-glass service drive lamp that was excited by impact.

steel cam, one inch long, was constructed and the lamp mounted to pivot on a nonconductive rod that was parallel to the axis of the cam rotation. When this unit was operated with the cam offset .063 inch and rotating at 175 rpm, the following was noted:

1. the lamp did not follow the cam with a regular motion;
2. the lamp dented and scored the cam surface, (see Fig. 26), and
3. the glass envelope tended to grind away at the point of contact.

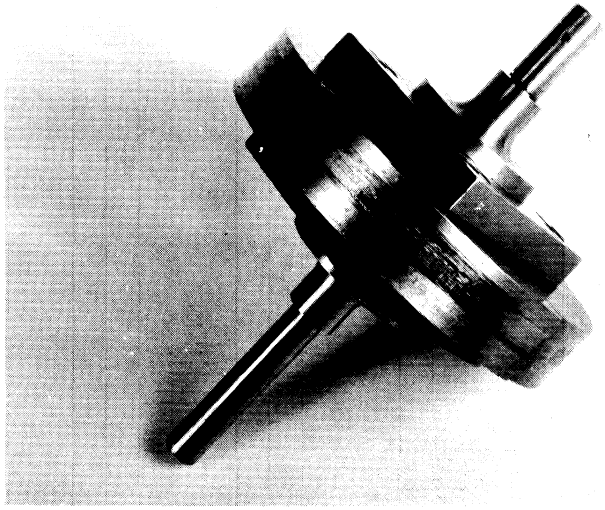

Fig. 26. The steel cam used for the PAR impact test.

Analysis of the setup indicated this action was caused in part by the fact that the center of percussion was beyond the point of contact of the lamp. This could have been altered by moving the center of gravity back with the addition of weight near the pivot. Since this seemed to be impractical, alternate means of dropping the lamp were sought.

The problem of holding the lamp in a controlled upright position was met by mounting the lamp in a clamping device that was suspended midway on four parallel taut wires. The lamp could then be raised or lowered in this arrangement with a minimum of restraint. This frame was subsequently mounted on the rotary-drum unit so that when the drum turned, the lamp was raised and dropped onto the cam surface.

This mounting was a great improvement over the pivoted arrangement originally described but the cam's rotation tended to pull at the point of

contact and the grinding action was also still present. To eliminate these objectionable points, a pivoted nylon follower was placed between the lamp and the steel cam. This arrangement allowed the lamp to be raised and dropped with none of the objections noted previously. By using an indicator bulb mounted in a PAR 4800 lamp housing, it was noted that there was little energy lost by the addition of this nylon follower. This method of testing lamps, although possible, was judged to be quite impractical because of the flimsy arrangement used to lift the lamp and its suspension. Consequently effort was devoted to a search for an improved mounting arrangement.

Figure 27 shows the side view of a tester unit that was used successfully for impact-testing a limited number of PAR lamps. It will be noted that the lamp is held by a clamp open at the bottom, and that the clamp, in turn, is supported by four parallel flat springs. The lamp is raised by a cam acting on the lever. (A push type solenoid may be used.) When the lamp is released, it drops upon a piece of steel that is supported in sand.

A total of fourteen lamps were tested on this device. The conditions of the tests were:

drop	.045 inch
frequency of impact	700 per minute
filament cycle	30 minute; 25 minutes lighted, 5 minutes not lighted

The test results of these fourteen lamps were quite closely related. About one-half the failures occurred hot while the remaining lamps failed during the cold portion of the cycle. The failure times ranged from 81 to 596 minutes with an average failure time of 232 minutes. Two lamps did not fail after 960 minutes of operation.

These results seem to indicate that a test device for PAR type lamps is feasible. The requirements to make a workable device are as follows:

1. The lamp must be suspended with the minimum amount of restraint in a position normal to its regular operation.

2. The lamp must be lifted repeatedly and allowed to fall so that the envelope strikes a relatively inelastic surface.

3. Means must be provided for adjustment of the drop height and the frequency of impact.

4. The device must be simple and compact to permit the building and operation of multiple test units.

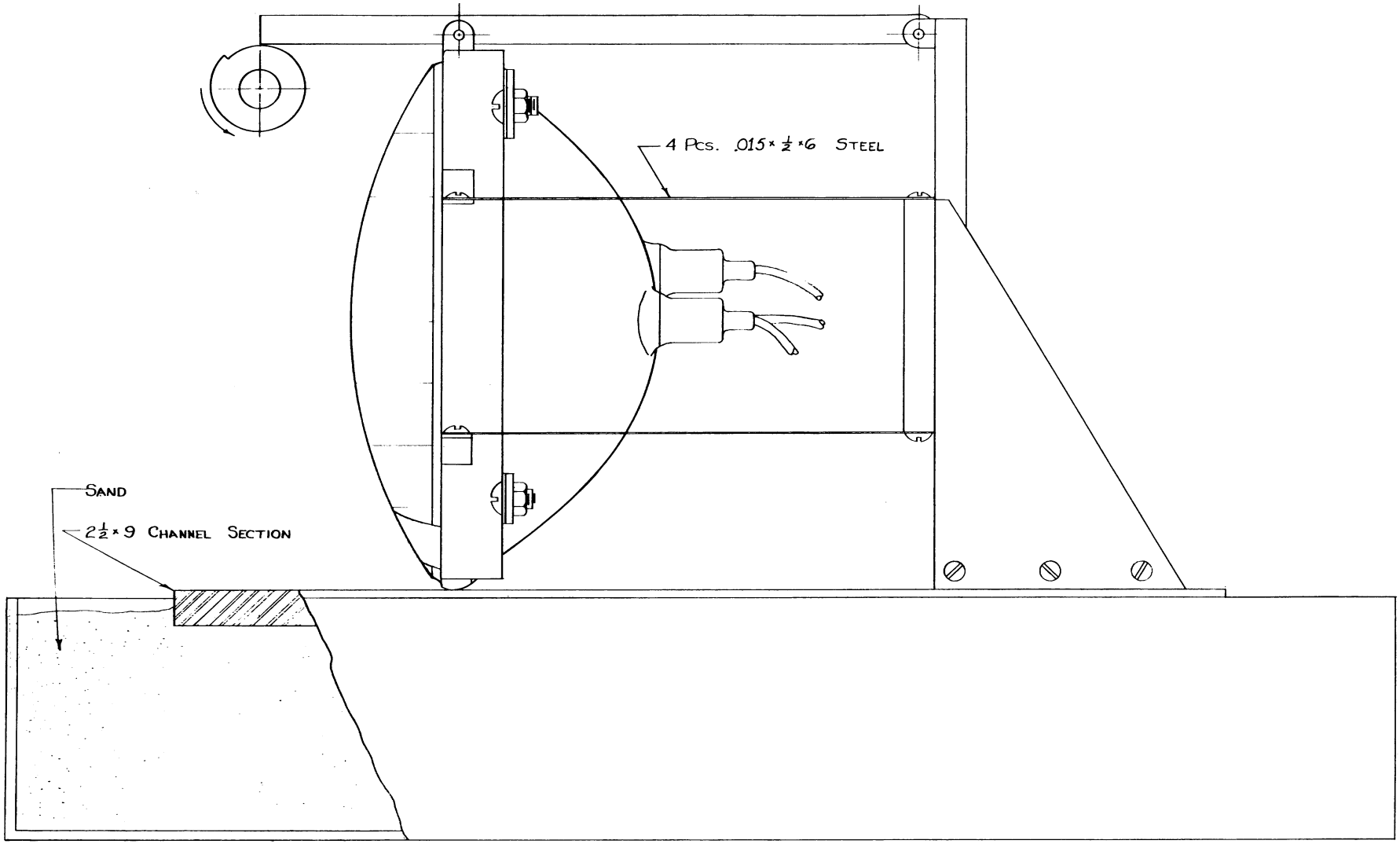

Fig. 27. General arrangement for a simplified impact tester for PAR type lamps.

B. FEASIBILITY OF AN IMPACT TESTER FOR LIGHTING EQUIPMENT

It would be desirable to be able to test lighting equipment, i.e., tail lamp assemblies, marker lamps, etc., for resistance to shock and vibration since such a test would be of value to both the user and the manufacturer. Such equipment could then be quickly evaluated to determine if there is any structural weakness, or design shortcomings, and if the bulb is sufficiently isolated to prevent damage. This would be an ideal device to help the equipment manufacturer and the bulb manufacturer to develop units that would resist shock. The criteria for design, the factors affecting the design, and a possible design of such a test unit will be discussed.

1. Criteria for Design.—The makers of lighting equipment are interested in creating a substantial unit; the bulb manufacturers are interested in placing their products in a semi-protected environment; and the ultimate consumer wants to determine if the product will meet his requirements. To satisfy these demands, a test unit would need to fill the following objectives:

1. The tester would need to be adaptable to lamp units of various physical sizes, weights, and dimensions.
2. The tester must be such that the force of impact can be changed readily for varying the test severity.
3. The tester must be simple, reliable, and easy to use.

2. Factors Affecting the Design.—If these three objectives are met, then a test device would result that would be able to accommodate such military lamps as the blackout drive lamp, right or left tail lamps, front marker lamps, etc. These lamps vary not only in their weight but also in the method of attachment and in the internal components. It is obvious that each lamp would require a different mounting to secure it to the tester. With the changes in mounts and lamps, the weight will vary, and the striking velocity will consequently change. In the analysis of the Arsenal impact tester, the equation for striking velocity was given as

$$\dot{X}_1 = - hp_1 \left[1 + \frac{N_2}{3600\ P_1^2} + 2\,\frac{\Delta}{h} \right]^{1/2} . \qquad (44)$$

For a lamp tester the striking velocity would be in the neighborhood of

$$\dot{X}_1 = \sqrt{\left(1 + 2\,\frac{\Delta}{h}\right)}\, h \sqrt{\frac{kg}{w}} .$$

This shows clearly that the velocity would decrease when the weight is decreased or vice versa. Therefore some compensation for changes in weight

would have to be provided. To vary the severity of the test, it would be a simple matter to vary the drop h, which, of course, would alter the net striking velocity.

A simple supporting structure is desirable to keep the energy loss to a minimum and to produce a machine that will yield uniform results. This fact can be illustrated by the development of the rotary-drum tester. Originally the lamps were held by a simple lever arm soldered to the lamp, but as the attachment became more complex greater amounts of energy were required for filament failure and the reliability of the tester declined slightly.

3. Possible Design of an Impact Tester for Lighting Equipment.—It is envisioned that an impact tester for lighting equipment could be developed using the criteria previously discussed. The main supporting structure would probably be a simple, fairly rigid, cantilever arm supported by an elastic steel hinge. This structure or arm might be raised by a cam rotating against a follower attached near the end of the arm. The vertical positioning of the cam should be adjustable to alter the drop of the arm.

One-half of the anvil should consist of a flat piece of hardened steel attached firmly to the machine's lower frame. The movable or upper anvil attached to the arm should consist of a similar piece of steel shaped with a spherical radius. This arrangement would allow good point contact even if the arm did have slight oscillation and/or other uncontrollable movement.

The actual lamp holders would have to be quite versatile to accommodate a maximum number of different lamp shapes and mountings. These holders would need to be securely fastened to the frame and be planned in such a way that several different lamp types could use the same holder. Enough latitude in the fastening of the holder to the arm should be provided so that the center of percussion of the total arm and load could be located directly over the point of impact.

C. IMPACT-TEST SPECIFICATIONS

An impact tester for miniature incandescent lamps has been described and the evaluation results reported. The unique features of this rotary-drum impact tester make it a consistent and reliable test instrument for miniature lamps as shown by the two machines built and used continuously by the project for periods of 15 and 28 months. During this time continual records have been kept of the performance and behavior of these machines and from these data specifications for the tester and test conditions have evolved. It is believed that this test specification can be used as a guide for the alteration of the Federal Specification W-L-111b paragraph H-2e if the

rotary-drum tester is adopted to replace the presently accepted Federal impact tester.

The rotary-drum tester, described in Progress Report No. 45 for this project, will give optimum performance when the following procedure is used for the operation of impact tests.

1. Set the cam's offset to .070 inch ± .002 inch and the cam's speed at 200 ± 1 rpm.

2. Insert 20 lamps with either G-6 or S-8 bulbs into the recommended holder. These lamps shall be selected from a homogeneous group of 100 lamps.

3. The lamps shall be operated at their nominal voltage of 7, 14, or 28 volts.

4. The test cycle during the machine's operation shall be 25 minutes with the filament lighted followed by 5 minutes with the filament not lighted. (Note: The unlighted or cold filament is most accurately observed by the use of a neon indicator lamp switched in series with the filament.) This cycle will be repeated until a total of 480 minutes (8 hours) is completed.

5. At the completion of the test, the procedure shall be repeated four additional times until the 100 lamps have all been tested.

6. The data from the five tests, using the 100 lamps, shall be assembled into one cumulative mortality curve. This curve should not fall below the curve shown in Fig. 28.

These suggested impact specifications should be adequate for any of the single-contact lamps mounted in either a G-6 or S-8 bulb that is now in service. However, as more impact-test experience is gained, these specifications should be reviewed to determine what revisions are necessary. As additional holding devices for other lamps sizes and requirements are developed, the specification will also need to be revised to include the tests of these units.

D. SUMMARY

An impact tester for PAR type lamps has long been desired, but no machine has been widely accepted for this test. The basic theory for such a device is given in the analysis for impact-testing miniature lamps. With this in mind, several methods for raising the PAR envelope,

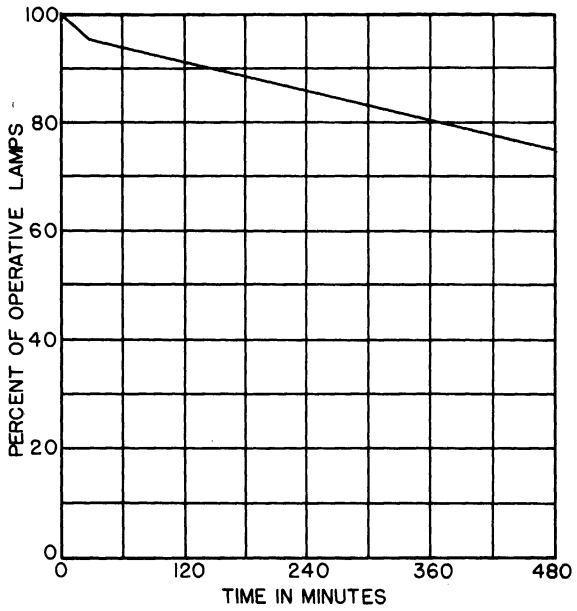

Fig. 28. Minimum mortality curve for lamps operated on the rotary-drum impact tester.

dropping it onto an inelastic surface, and letting it bounce to achieve the necessary force for impact-testing a lamp were demonstrated. A relatively successful method is described which has had limited use in the laboratory.

The criteria for the design, the factors affecting the design, and the possible design for an impact tester for lighting equipment are discussed. It is felt that such a unit is needed for the development and the acceptance testing of lighting equipment.

The basic procedure for impact tests on the rotary-drum tester is outlined.

VI. CONCLUSION AND RECOMMENDATIONS

1. The studies of the Arsenal type impact tester resulted in a number of structural modifications of the machine. Five additional machines were modified on the strength of evidence that indicated this alteration did improve the consistency of its performance. Subsequent tests did show each machine to be consistent, but only three of the six machines gave uniform results. It is recommended that this machine no longer be considered adequate for use in Federal acceptance impact tests.

2. The rotary-drum impact tester, a simple device for impact-testing miniature incandescent lamps that was designed, developed, and evaluated by the project, has produced consistent test results. Limited tests of additional units purchased by Ordnance supplies have proved to give uniform test results. Therefore, it is recommended that action be taken to incorporate the use of this machine into the Federal specifications for impact-testing of miniature incandescent lamps. Development of additional lamp holders for lamp sizes other than G-6 or S-8 bulbs should be undertaken to permit the use of this machine for the greatest variety of lamp sizes.

3. The characteristics of tungsten and their relationship to lamp filaments have been recorded. Numerous attempts to strengthen selected lamps have been evaluated by the project. It was noted that gains could be made by a mechanical rearrangement of filament sections, but the largest gain in lamp strength appears to come from the manufacturers' care in production and the type of tungsten wire that was used for the filament. Therefore, it is recommended that an impact-test program be established to select only the strongest lamps for use on tactical military vehicles.

4. A procedure for the impact-testing of miniature incandescent lamps on the rotary-drum impact tester has been developed as the result of numerous test programs conducted by the project. It is recommended that this program be adopted for use with the rotary-drum tester and its inclusion in the Federal acceptance specification W-L-111b be considered. It is also recommended that a periodic inspection be made of these specifications to determine if further revisions need to be instituted.

5. The basic design for an impact-test unit for automotive PAR type lamps was shown to be feasible. It is recommended that development of this device be continued so that a unit suitable for acceptance or development testing may be completed and standards for testing can be determined.

6. The feasibility of an impact-test unit for lighting equipment was determined. It is recommended that a device to meet the criteria of this tester be developed, evaluated, and standards for its use be determined.

REFERENCES

1. J. B. Dickson, "Tail Lamps, Chrysler Design Shock Absorbers," Chrysler Corp. Engineering Tech. Report No. 8103.22, Detroit, May, 1944.

2. J. B. Dickson, "Tail Lamps, Rubber Cushion Cemented to Lamp Housing," Chrysler Corp. Engineering Tech. Report No. 8103.24, Detroit, May, 1944.

3. D. R. Hubbard, Vibrations of Lamp Assemblies - Reo Army Truck, M 48, General Motors Proving Grounds, Milford, Mich., 1952, p.2.

4. D. R. Hubbard, Vibrations of Lamp Assemblies GMC Army Truck, M-135, General Motors Proving Grounds, Milford, Mich., 1952.

5. D. R. Hubbard, Vibration of Service Drive Lamp on GMC Army Truck, M-135, General Motors Proving Grounds, Milford, Mich., 1952.

6. Dudley Mahon, Tail Lamp Vibration, Cleveland Tank Plant, Cadillac Motor Car Division, Cleveland, Ohio, 1952.

7. "Second Report of Project TT1-720E - Electrical Equipment Vibration Test," United States Army, Aberdeen Proving Ground, April 11, 1955.

8. Shock on Electrical Components in Track-Laying and Wheeled Vehicles, The University of Michigan Engineering Research Institute Semiannual Progress Report (July, 1954), p.5.

9. "First Memorandum Report on Project TT1-720E - Electrical Equipment Vibration Test," United States Army, Aberdeen Proving Ground, 1952.

   "Fourth and Final Memorandum Report, Desent Tests 1953, All-Glass Sealed-Beam Headlamps," United States Army, Aberdeen Proving Ground, Sept. 26, 1953.

   "Winter Tests 1953-54, Tail Lamps," United States Army, Aberdeen Proving Ground, March 17, 1954.

   "Desert Tests 1952 Experimental Headlamp Seal Beam Units," United States Army, Aberdeen Proving Ground.

10. J. B. Dickson, "Tail Lamp Losses," Chrysler Corp. Engineering Tech. Report No. 8103.20, Jan., 1944.

11. SAE Handbook, Society of Automotive Engineers, Inc., New York, 1955, p.849.

12. Semiannual Progress Report (July, 1954), pp. 14-17.

13. Ibid., pp. 17-20.

14. Ibid., pp. 20-25.

15. Ibid., pp. 25-27.

16. Semiannual Progress Report No. 3 (Jan. 1, 1955 to June 30, 1955), pp. 9-11.

17. Ibid., pp. 4-9.

18. Semiannual Progress Report No. 5 (Dec. 2, 1955 to May 31, 1956), pp. 1-16.

19. Ibid., p. 17.

20. Semiannual Progress Report No. 1 (July, 1954), p. 25.

21. Ibid., pp. 37-38.

22. Ibid., pp. 37-39.

23. Progress Report No. 45 (May, 1957), pp. 5-6.

24. Semiannual Progress Report No. 5 (Dec. 2, 1955, to May 31, 1956), p. 33.

25. Semiannual Progress Report No. 4 (July 1, 1955, to Dec. 1, 1955), pp. 10-14.

26. Ibid., p. 16

27. Semiannual Progress Report No. 3 (Jan. 1, 1955, to June 30, 1955), pp. 22-25.

28. Semiannual Progress Report No. 6 (June 1, 1956, to Nov. 30, 1956), p. 1.

29. Kieffer, R., and Hotop, W., "Sintered Metals," Metal Industry, 66, pp. 342-344, 354-356, 378-380 (1945).

30. Bridgeman, Proc. Am. Acad. Sci., 60, p. 305 (1925).

31. Wright, Proc. Royal Soc., A 126, p. 613 (1930).

32. Goetzel, C., Treatise on Powder Metallurgy, Interscience Publishers, Inc. New York, 1950.

33. Semiannual Progress Report No. 2 (July 1, 1954, to Jan., 1955), p. 10-12.

34. Ibid., pp. 13-14.

35. Semiannual Progress Report No. 3 (January 1, 1955, to June 30, 1955), pp. 23-24.

36. Semiannual Progress Report No. 5 (December 2, 1955, to May 31, 1956), pp. 34-38.

37. Ibid., pp. 38-40.

38. Semiannual Progress Report No. 6 (June 1, 1956, to November 30, 1956), p. 9.

39. Semiannual Progress Report No. 5 (December 2, 1955, to May 31, 1956), pp. 40-47.

40. Semiannual Progress Report No. 6 (June 1, 1956, to November 30, 1956), pp. 7-8.

41. Semiannual Progress Report No. 5 (December 2, 1955, to May 31, 1956), pp. 20-24.

42. Semiannual Progress Report No. 6 (June 1, 1956, to November 30, 1956), pp. 7-12.

43. Ibid., pp. 10-11.

44. Semiannual Progress Report (July 1, 1954), p. 22.

APPENDIX

A. Two drawings for the rotary-drum impact tester have been revised. The revised drawings (RD 5-18 and RD 6-18) are shown on the following pages.

B. The rotary-drum lamp holder for single-contact S-8 lamps (RD 6-10) has been modified so that the minor filament of a double-contact lamp of the same size may be tested. The necessary prints, RD 6-70, RD 6-71, RD 6-72, and RD 6-73, are included in the following pages.

DTA 17722

DWG. NO. A

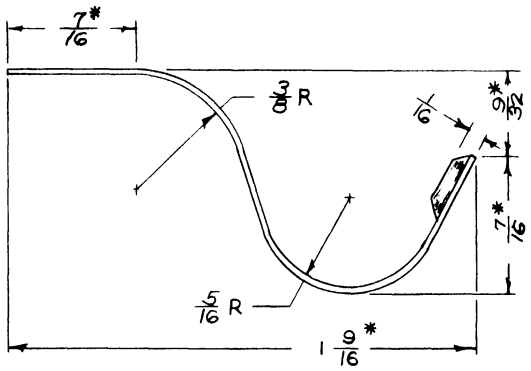

*APPROXIMATE

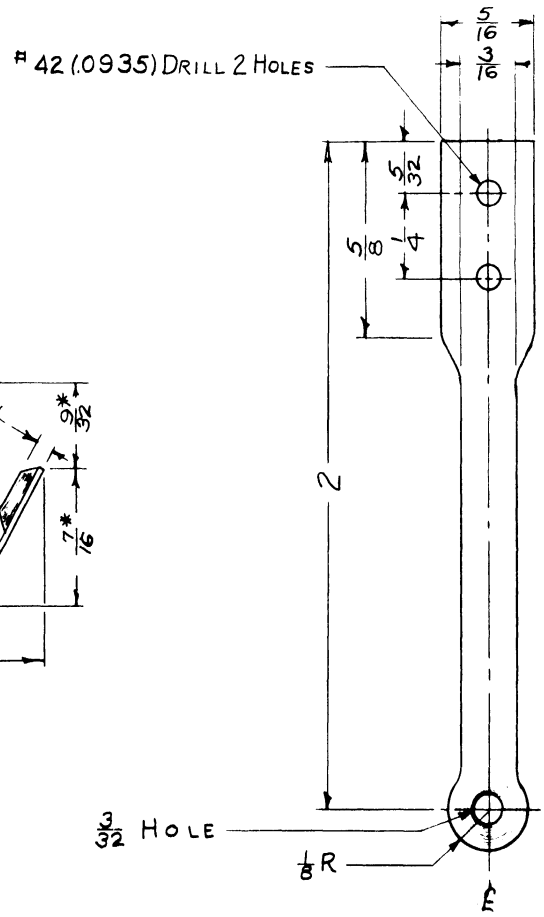

SYM.	DESCRIPTION	DATE	CHK.
C	WAS 2 1/8	8-26-57	
B	SUGGESTED SOURCE REMOVED	7-19-57	
A	REDRAWN AND REVISED	7-19-57	

REVISIONS

PART NO.	NAME	REQ'D.	MAT'L.	SIZE
RD5-18	SPRING CONTACT	20	BERYLLUM COPPER SPRING TEMP.	.010 × 5/16 × 2 1/4

DIMENSIONAL TOLERANCE ~ FRACTIONAL ± 1/64 DECIMAL ± .005

ISSUE	DATE

ENGINEERING RESEARCH INSTITUTE
UNIVERSITY OF MICHIGAN
ANN ARBOR MICHIGAN

PROJECT 2145

CLASSIFICATION

DESIGNED BY H. Olson
DRAWN BY
CHECKED BY
APPROVED BY
SCALE 2:1
DATE 3-6-57

TITLE SPRING CONTACT

DWG. NO. A- DTA 17722

1000 6-55 DETROIT BLUE PRINT & SUPPLY CO.

DTA 17746

DWG. NO. A

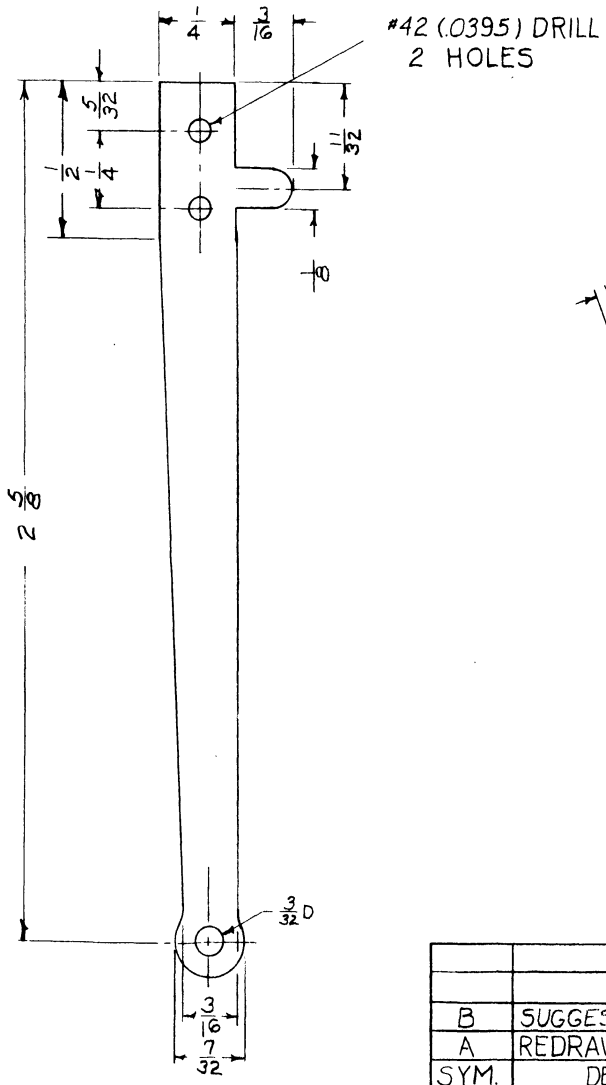

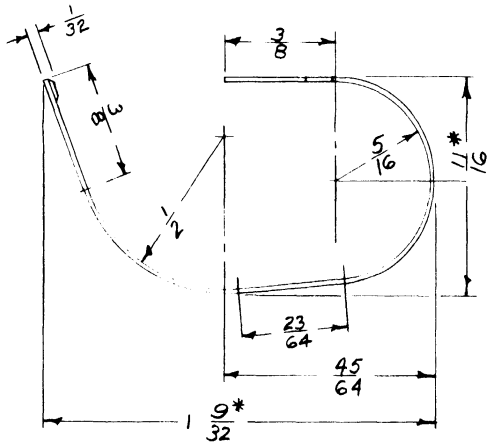

* APPROIMATE

SYM.	DESCRIPTION	DATE	CHK.
B	SUGGESTED SOURCE REMOVED	7-19-57	H.O.
A	REDRAWN AND REVISED	7-19-57	H.O.

REVISIONS

PART NO.	NAME	REQ'D.	MAT'L.	SIZE
RD6-18	SPRING, CONTACT	20	BERYLLIUM COPPER SPRING TEMP.	.010 × 7/16 × 2 3/4

DIMENSIONAL TOLERANCE ~ FRACTIONAL ± 1/64 DECIMAL ±.005

ENGINEERING RESEARCH INSTITUTE UNIVERSITY OF MICHIGAN ANN ARBOR MICHIGAN	DESIGNED BY H. Olsen DRAWN BY PJM CHECKED BY APPROVED BY SCALE 2:1 DATE 3-25-57
PROJECT 2145	TITLE SPRING, CONTACT
CLASSIFICATION	DWG. NO. A- DTA 17746

ISSUE | DATE

1000 6-58 DETROIT BLUE PRINT & SUPPLY CO.

DWG. NO. C

PART NO.	NAME	REQ'D.	MAT'L.	SIZE
RDG-17	CLIP PIVOT ARM	20	SEE PRINT	
RDG-18	SPRING CONTACT	20	SEE PRINT	
RDG-19	CABLE, CONNECTING	40	USE RDS-19 PRINT	
RDG-71	BEARING, PIVOT	18	NYLON FM 10001	5/16 × 5/16 × 1 5/16
RDG-72	BEARING, PIVOT LEFT CENTER	1	NYLON FM 10001	5/16 × 5/16 × 3/16
RDG-73	BEARING, PIVOT RIGHT CENTER	1	NYLON FM 10001	5/16 × 5/16 × 3/16

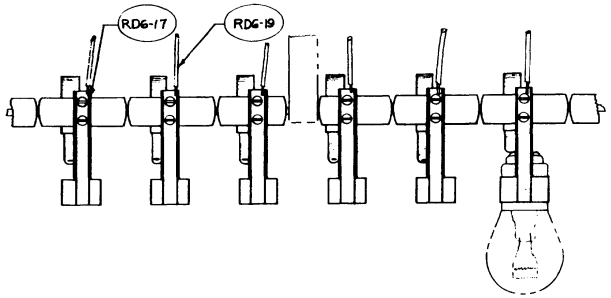

~TOP VIEW~

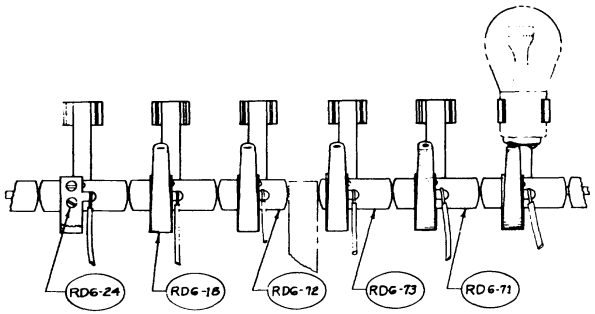

~BOTTOM VIEW~

DTA-17749

ISSUE	DATE			
		ENGINEERING RESEARCH INSTITUTE UNIVERSITY OF MICHIGAN ANN ARBOR MICHIGAN	DESIGNED BY H. O. L.	APPROVED BY
			DRAWN BY	SCALE 1:1
			CHECKED BY	DATE 6-12-67
		PROJECT 2145	TITLE RDG-70 MODIFICATION OF S-8(S.C.) LAMP HOLDER ASSY (RDG-10) FOR D.C. LAMPS	
		CLASSIFICATION	DWG. NO. C-DTA-17749	

DTA-17750

DWG. NO. A

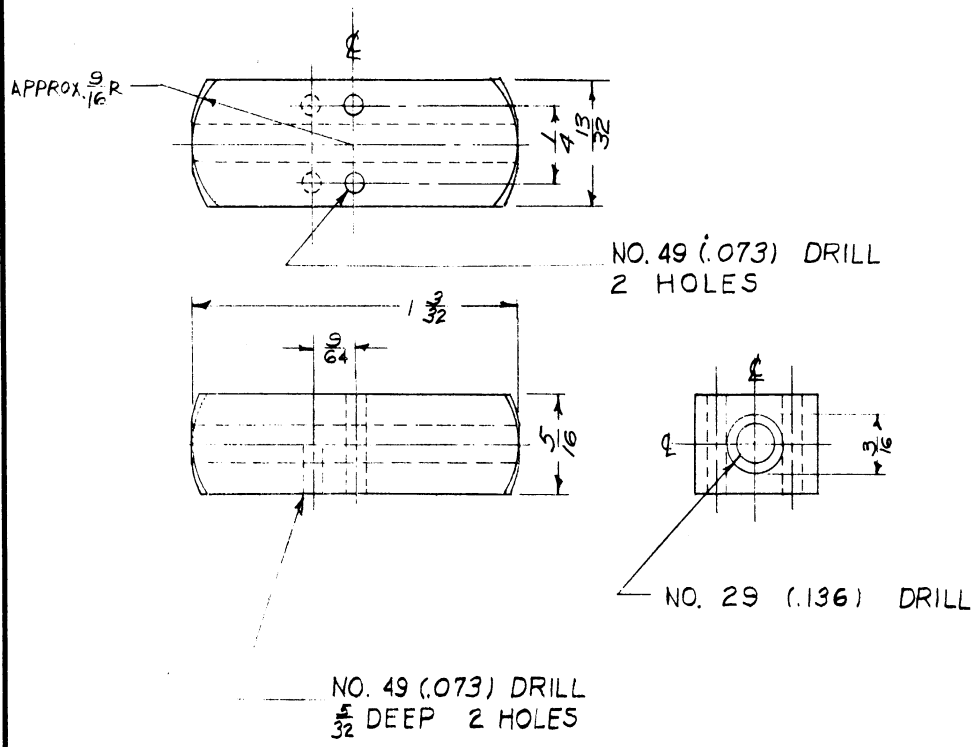

RD6 - 71	PIVOT BRG	18	NYLON FM-10001	13/32 × 5/16 × 1 3/32
PART NO.	NAME	REQ'D.	MAT'L	SIZE

ENGINEERING RESEARCH INSTITUTE UNIVERSITY OF MICHIGAN ANN ARBOR MICHIGAN	DESIGNED BY H.O.	APPROVED BY	
	DRAWN BY	SCALE 2:1	
	CHECKED BY	DATE 6-11-57	
PROJECT 2145	TITLE PIVOT BRG. D.C. S-8 LAMP		
CLASSIFICATION	DWG. NO. A-DTA 17750		
ISSUE / DATE			

1000 6-53 DETROIT BLUE PRINT & SUPPLY CO.

DTA-17751

DWG. NO. A

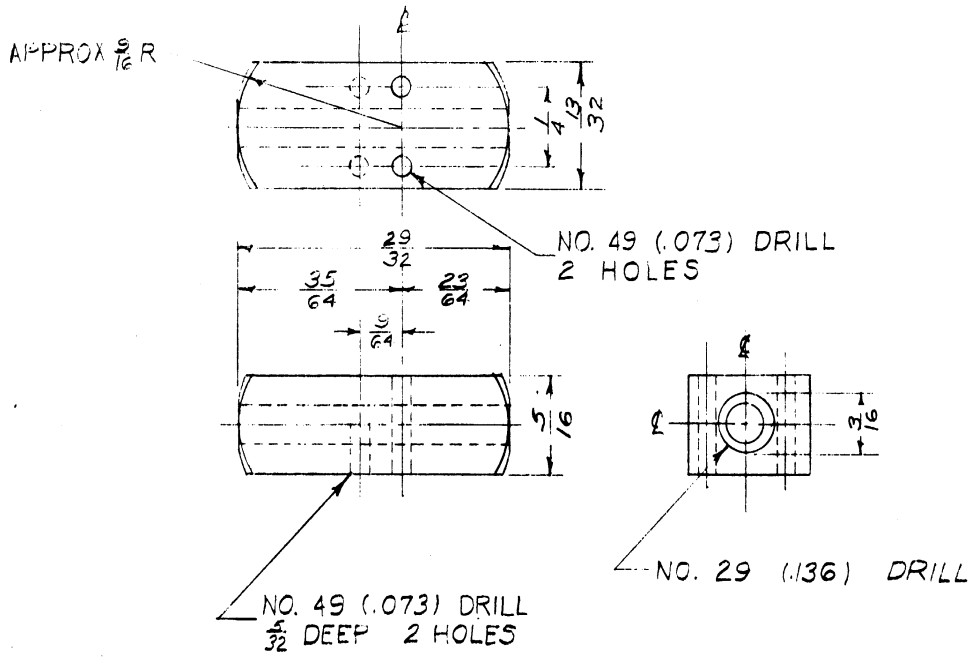

PART NO.	NAME	REQ'D	MAT'L	SIZE
RDG-72	PIVOT BRG, LEFT CTR.	1	NYLON-FM 10001	13/32 x 5/16 x 29/32

ENGINEERING RESEARCH INSTITUTE UNIVERSITY OF MICHIGAN ANN ARBOR MICHIGAN	DESIGNED BY H OLSAN	APPROVED BY	
	DRAWN BY	SCALE 2:1	
	CHECKED BY	DATE 6-11-57	
PROJECT 2145	TITLE PIVOT BRG. LEFT CENTER D.C. S-8 LAMP		
CLASSIFICATION	DWG. NO. A-DTA 17751		
ISSUE / DATE			

1000 6-55 DETROIT BLUE PRINT & SUPPLY CO.

DTA-17752

DWG. NO. A

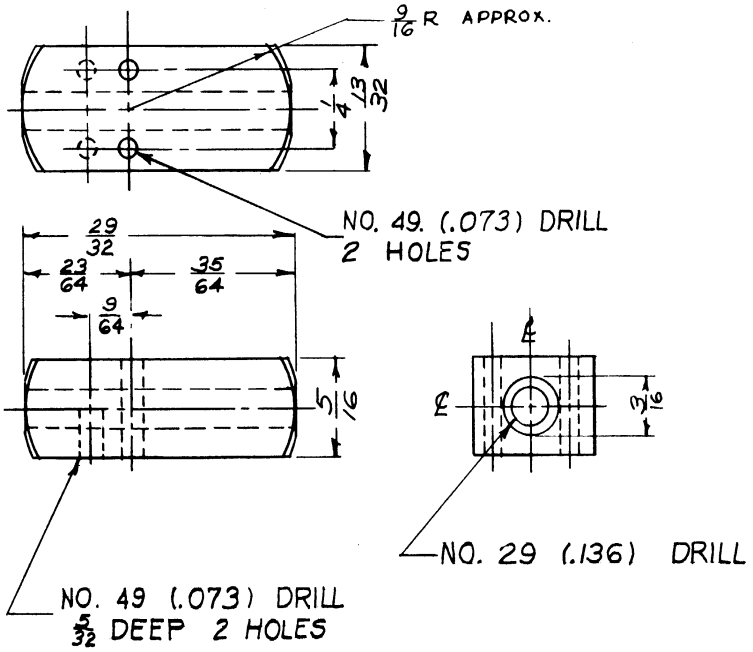

PART NO.	NAME	REQ'D.	MAT'L	SIZE
RD6-73	PIVOT BRG, RT. CTR	1	NYLON FM-10001	13/32 x 5/16 x 29/32

ENGINEERING RESEARCH INSTITUTE UNIVERSITY OF MICHIGAN ANN ARBOR MICHIGAN	DESIGNED BY H. Olsen	APPROVED BY	
	DRAWN BY	SCALE 2:1	
	CHECKED BY	DATE 6-11-57	
PROJECT 2145	TITLE PIVOT BRG. RT. CENTER D.C. S-8 LAMP		
CLASSIFICATION	DWG. NO. A- DTA-17752		
ISSUE / DATE			

1000 6-55 DETROIT BLUE PRINT & SUPPLY CO.