DESIGN AND OPERATION OF A SURFACE FIELD MEASUREMENT FACILITY

by

E. F. Knott

December 1965

Contract AF 04(694)-683

Prepared for

BALLISTIC SYSTEMS DIVISION
AIR FORCE SYSTEMS COMMAND
UNITED STATES AIR FORCE
NORTON AIR FORCE BASE, CALIFORNIA

ABSTRACT

The capability to measure surface fields induced upon scattering obstacles by an incident plane wave can be a very powerful diagnostic tool. A surface field measurement facility is comprized of four basic components: an anechoic chamber to provide a free space environment, a traversing mechanism to provide accurate probe positioning, the probe itself to sense the induced fields, and the necessary microwave instrumentation to permit the acquisition of data. All the components are required if meaningful measurements are to be made. The design and operation of a surface field measurement facility is described and some of the attendant problems are outlined. The investigation is part of the SURF program.

TABLE OF CONTENTS

I

INTRODUCTION

Measurements of the surface fields induced upon obstacles by RF energy have become common place and the techniques for making such measurements have been well established for several years. The process of determining surface fields has been traditionally popular with antenna designers, since it quickly reveals the current distributions over antenna surfaces or the field distributions across apertures. The nature of such distributions can often show the engineer how his design should be modified and occasionally such measurements warrant as much attention as do the far-field radiation patterns.

In the same fashion, the radar cross section expert has become increasingly interested in the surface fields induced by incident RF energy upon distant objects, since these are precisely the fields which determine the scattering properties of the obstacle. As with antennas, if the surface fields are completely known over the entire object, the far-field radiation - called scattering in this case - can be determined, at least in principle. In neither antenna nor scattering studies does one attempt to use experimentally determined surface field data directly to calculate the scattered field, which is a formidable task at best. Instead, the data is used as a guide in the selection of mathematical descriptions, which may then be used with wider application. Hence the acquisition and interpretation of experimental surface field data can be used to check the approximations which inescapably appear in electromagnetic scattering theory.

One of the classical techniques used in antenna current distribution measurements is that of providing a slot along which a sampling probe moves. The slot not only guides the probe, but if the antenna is made hollow, the probe leads may be hidden within the antenna itself. The slot technique is especially useful for measurements upon thin linear antennas, such as dipoles, which support essentially one-dimensional RF currents and measurements have even been made on slotted helices [1].

The slot is made parallel to the direction of current flow, and since such a slot does not radiate, it does not disturb the current distribution on the antenna. For situations which have symmetry, a ground plane can be used advantageously to completely hide the probe leads from the radiation field of the antenna. In this arrangement only half the antenna is used since the other half is mirrored in the ground plane. While it is true the use of the ground plane substantially improves the measurement environment, the symmetry restriction it imposes markedly reduces the number of cases which may be studied by the use of this technique.

The surface fields usually encountered in antenna work are much more intense than those found when one studies scattering by obstacles. In the former case the antenna is excited by energy sources which are connected directly to the antenna and the power levels are typically of the order of milliwatts*. In order to study scattering, the obstacle under test should be illuminated by a plane wave, requiring that the source of the wave be relatively remote from the surfaces being examined. Consequently the power levels can be of the order of microwatts or less. Although the intensities of the fields induced upon the object are small, they can be measured in much the same way as they are on antennas.

As is the case with antennas, a ground plane can be of value in the study of the fields induced upon a target a few wavelengths away. It should be noted that the plane must be large, for it must extend from the source of illumination all the way to the object under test and must even continue appreciably beyond the object. As might be expected, the illuminating antenna is half an antenna since its image appears below the ground plane and the target is likewise half a target. The latter,

---

* When the antenna is finally incorporated into the equipment for which it was designed, power levels from hundreds to millions of watts may be used, but for the purposes of development and testing, milliwatt power levels are common.

interestingly enough, is usually obtained by sawing in half a complete object. The desired probe trajectories are slotted into the test object, preferably along the direction of current flow, and the probe is inserted in the slot from below the ground plane. The probe leads are well shielded since they are not in the radiation field shining upon the target and sometimes even personnel and equipment can be housed beneath the system.

Although the use of the technique solves many problems faced by the experimenter, it creates a host of others. There can be reflections from the edge of the ground plane beyond the target and these will perturb the incident field. The ground plane itself must be flat and ripple-free, since these may be another source of perturbations. A serious restriction is that only vertical polarization may be used since the metallic sheet will support only electric fields which are perpendicular to the surface. The most severe problem of all is one of symmetry: all the targets used in the system must contain a natural plane of symmetry by virtue of the imaging process. When this restriction is coupled with that of fixed polarization, the classes of targets and illumination conditions that may be studied are comparatively few.

A free space environment, on the other hand, does not require the use of the ground plane and is the only one in which an arbitrary target may be measured. This system suffers the disadvantage that the probe and its leads must remain within the radiation field but slots in the object are not needed. The object need not be mutilated in any way and is therefore available for other tests as desired, including backscatter measurements.

The principle of the system is quite simple and is shown in Figure 1. The antenna at the left radiates electromagnetic energy which falls upon the obstacle to be examined. The obstacle is placed far enough from the antenna that the relative phase and amplitude distributions over the volume it occupies are negligibly different from those which would occur had the antenna been infinitely far away. The

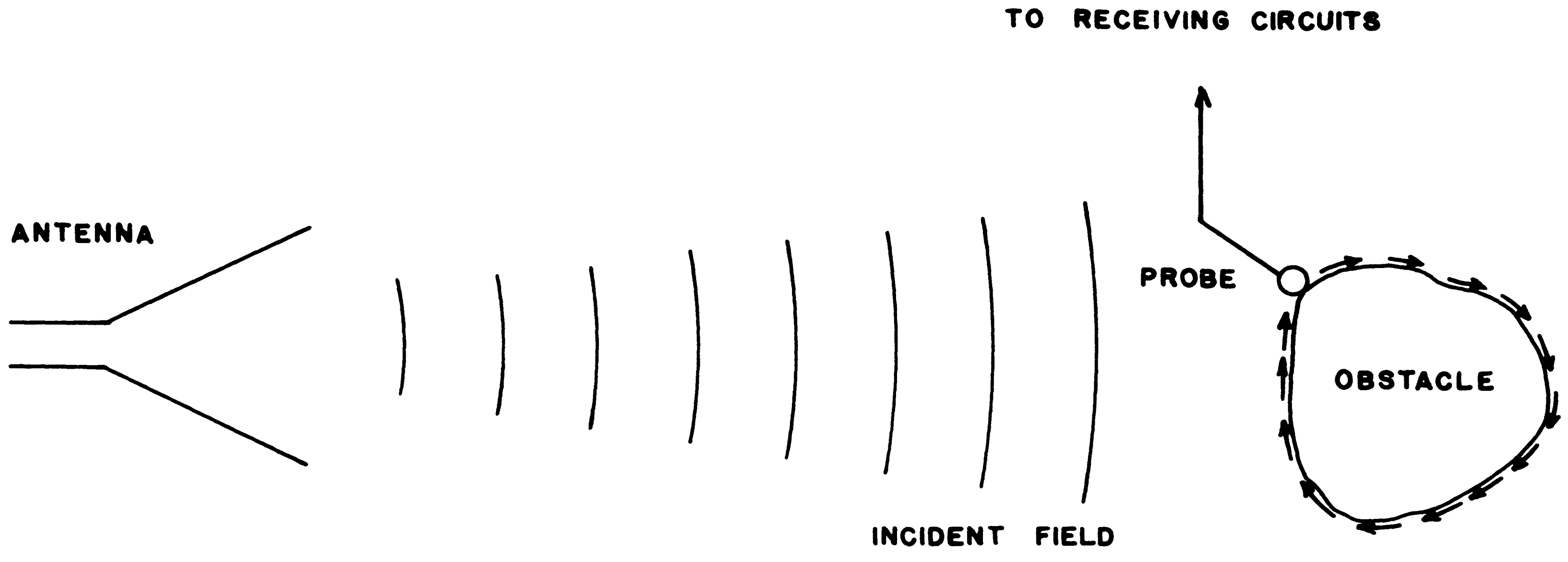

FIG. 1: BASIC SURFACE FIELD MEASUREMENT TECHNIQUE

incident radiation induces currents over the entire surface of the obstacle which then radiate in all directions. The surface is probed with a sensing device whose output is fed to a detection system. The device happens to measure magnetic or electric fields at the surface instead of the currents or charges, but the measured quantities can be directly related to the desired quantities by well-known boundary conditions.

To the staff of the Radiation Laboratory the advantages provided by the free space environment outweighed its disadvantages and it was decided that a facility should be constructed and operated. Mr. V. Liepa of the Laboratory began assembling the components of the free space system in the summer of 1962 and soon had made some preliminary measurements. A photo of the facility is presented in Figure 2. The light and dark panels seen in the background are odd pieces of absorber that were left over from the improvement of another anechoic facility. A cone-sphere is shown supported upon a serrated Styrofoam column and is illuminated by a horn antenna housed in the wooden box at left center. The RF components are clustered on the bench at left while the probe positioning fixture and the detection system are concealed behind the absorber barrier at the far right.

Several probes were made and tested in the facility ranging from simple electric dipoles and diode loops to unbalanced shielded loops, which will be discussed in Section IV. Relatively insensitive detection schemes had to be used but meaningful measurements were made possible by the use of strong signal sources. The surface fields on thin cylinders and strips were measured and in 1964 the techniques were sufficiently developed to verify experimentally a theoretical impedance-loading prediction [2] . It was in this study that the utility of a surface field measurement facility was demonstrated.

The construction and operation of the crude facility, as it is now regarded, showed that it had many shortcomings, but these very problems also indicated how an improved facility <u>should</u> be constructed. The crude environment suffered from a

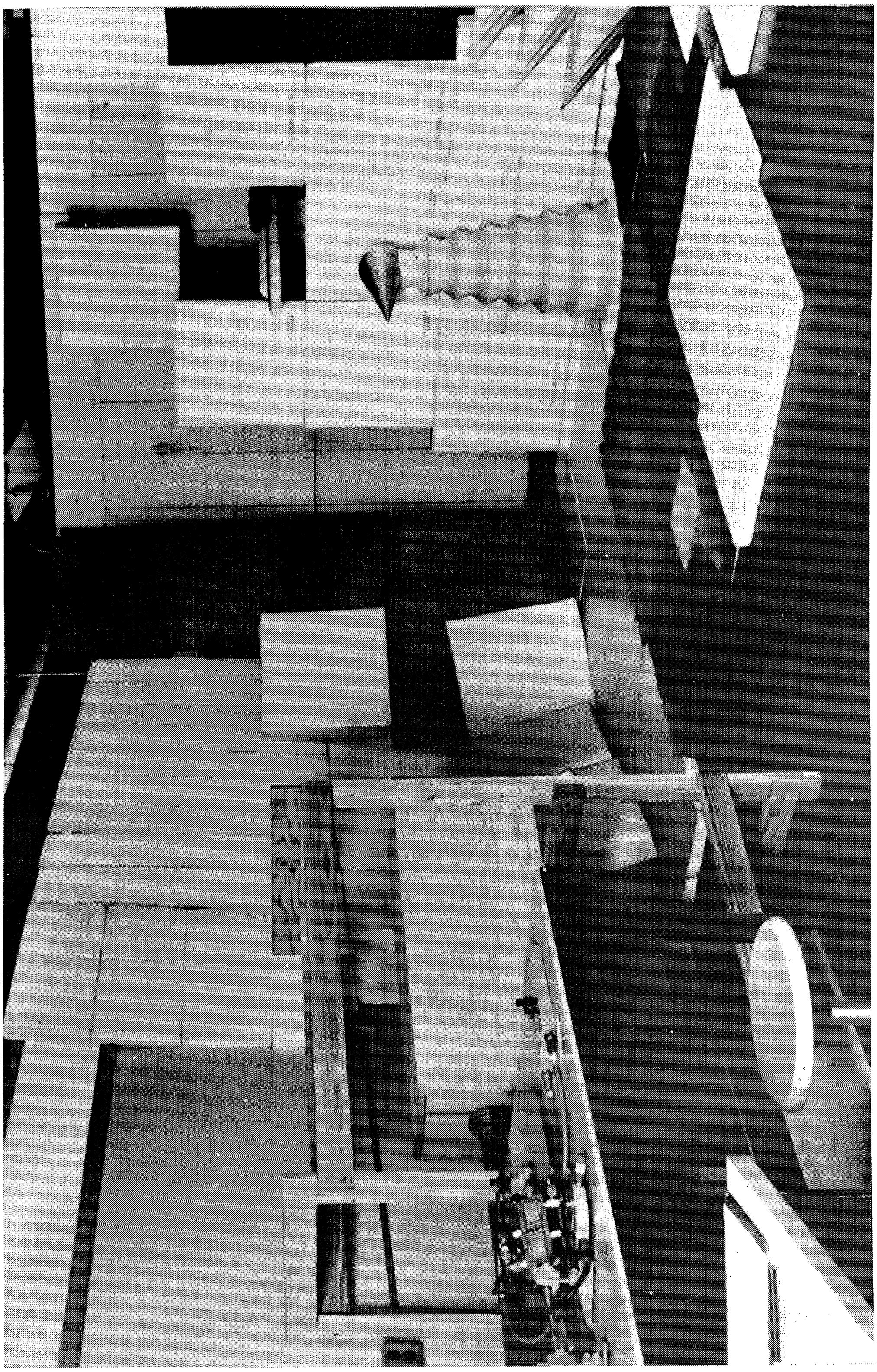

FIG. 2: PHOTOGRAPH OF LIEPA'S ORIGINAL SURFACE FIELD MEASUREMENT FACILITY

lack of good absorbing materials as evidenced from a measurement that was once made: some cyclic surface field variations turned out to be nothing more than reflections from nearby absorbing material. The probe positioning equipment had to be near the target and therefore permitted little spacing between the target and the absorber shielding the equipment. In addition, the early probes were large, of the order of 5 to 10 millimeters, and disturbed the true field configurations. Another problem was the poor sensitivity of the simple detection system. The shortcomings and ofttimes disheartening discoveries indicated precisely what things should or should not be done in a more sophisticated facility and served as a useful guide for future work.

Even while the measurements were being performed in the crude facility, a greatly improved one was being planned. The major components were carefully considered and delineated into four distinct categories: an anechoic chamber, a probe traversing system, the probes themselves, and the instrumentation. The chamber design was quickly agreed upon and probes already existed which could be used for preliminary measurements. Construction of the probe traversing equipment was somewhat slower and more complicated since a different approach was used from that employed in the crude facility. Finally, as funds were made available, the various microwave components were acquired.

It is the purpose of this report to describe in detail the design and operation of the facility devoted exclusively to the measurement of surface fields. Each of the four major components will be discussed and attention will be given to the philosophy which influenced the various decisions that were made regarding the design. The construction and evaluation of probes will be included and a typical measurement sequence upon a target will be presented. While the facility was intended primarily for studies related to scattering, it may be used for measurements on antennas of restricted size or for limited far-field measurements.

II
DESIGN OF THE CHAMBER

It had been suggested by others that, in the design of microwave anechoic chambers, wall reflections could be reduced if the transmitting end of the chamber was tapered [3]. An experimental study was undertaken at the Radiation Laboratory in mid-1964 in which models of tapered and then conventional chambers were compared and the results indicated that a substantial improvement could be obtained in chamber performance [4]. An unexpected result of the study suggested that if two materially different kinds of absorber were used to line the chamber, one kind in the tapered portion and another in the rectangular portion, the discontinuity formed by their junction gave rise to interference. In order to reduce the reflection the two kinds of absorber must somehow be matched together. At about the same time the B. F. Goodrich Company arrived at the same conclusion, for their chamber designs and advertising brochures clearly showed how the matching was accomplished. Based upon the results of the tapered model chamber study and upon B. F. Goodrich's successful matching process, a tapered anechoic chamber was designed to house the surface field facility.

The design of the anechoic chamber in which the measurements were to be made was influenced by three main considerations: the available space, the nature of the probe positioning device, and the desire to incorporate the tapered design. The volume which was at the time available was about 13 feet wide, 17 feet high, and 50 feet long and was being used as a storage area in the Radiation Laboratory's experimental facility in Hangar II at Willow Run Airport. The volume represents the maximum outside dimensions that the chamber could possibly have without uncomfortably crowding other activities. It was, of course, planned that the chamber be tapered, having a rectangular test section in which the target would be measured. The maximum available width was used, and due to the finite thickness of the chamber walls, the inside width of the rectangular test section was chosen to be 12 feet.

The probe positioning equipment was to be installed on the deck above the test section so that the probe itself would be suspended vertically into the chamber. This was felt to be the best way of supporting the probe: if it were to enter the chamber from the side, for example, a relatively thick probe support structure would be required and the positioning equipment would be more complex than that needed for the suspension technique. Since the positioning equipment would be mounted above the chamber and would require occasional attention of personnel, there would have to be room enough on the deck for a man to move about. Consequently a vertical inside dimension of 10 feet was selected, which allows about 6 feet of clearance between the deck and natural ceiling of the building, enough for a short man to stand erect. The length of the rectangular portion was arbitrarily chosen to be 11 feet: the total dimensions of this part of the chamber are thus 10 feet high, 12 feet wide and 11 feet long.

The length of the tapered portion of the chamber was determined by a standard other than that of available space. It was decided that the decay in incident power, which is inversely proportional to the square of the range from antenna to target, must not exceed 0.5 db over a longitudinal span 2 feet long at the center of the test region. This distance worked out to be 34.7 feet. The length of the taper, from the apex to rectangular test region, was accordingly made 33 feet long, hence to the center of the test region, the distance is about 38.5 feet. The initial few inches of the apex end of the taper have been removed to leave an aperture large enough to pass a section of L-band waveguide and one side of the chamber near the apex is removable so that the antenna may be installed or adjusted at will. A series of pyramidal transmitting horns is available, varying in size as required by frequency, which may be positioned near the apex. They are installed as near the end as possible, but by the very nature of the taper, the mouths of the larger horns lie further along the room axis than do the mouths of the smaller horns, The differences in size from largest to smallest horn is such that the range from the aperture of an antenna fitted tightly in the taper to the target can vary from a minimum of 32 feet to a maximum of 36 feet.

Directly behind the chamber is a control room which contains most of the instrumentation for the facility and is where the measurements are conducted. Access from the control room to the chamber itself is provided by an entrance baffle, while the deck above the chamber is reached by a ladder from the control room. The baffle arrangement was chosen since it would obviate swinging or drawing open an absorber-laden door, but as will be discussed below, it gave rise to an apparent degradation in chamber performance. The ladder was chosen instead of stairs mainly because of the rather limited space available in the control room. When not in use the ladder is stored behind the entrance baffle. A square hole, 2 feet on a side, was provided in the deck for passage and motion of the probe.

The chamber walls were framed and constructed to the inside dimensions described above and a sketch is shown in Figure 3 as the chamber might appear without its internal lining of absorber. The walls are plywood and, contrary to the usual practice, there is no metallic shielding over them. For economy, the shielding was omitted and the absorber was mounted directly on the plywood: there have been no noticeable effects traceable to the lack of shielding. Four incandescent 100-watt lamps illuminate the rectangular portion of the chamber, two of which are in the ceiling near the probe aperture while the other two are mounted high on the side walls and are directed toward the test volume. They are flush-mounted fixtures and are well hidden when the absorber is installed.

All the absorber used in the chamber was purchased from the B. F. Goodrich Company of Shelton, Connecticut. Figures 4 and 5 are photographs taken from the rear entrance baffle and from the apex, respectively, which show the different kinds of absorber used and how they were placed. In addition, Figure 6 is a sketch of the

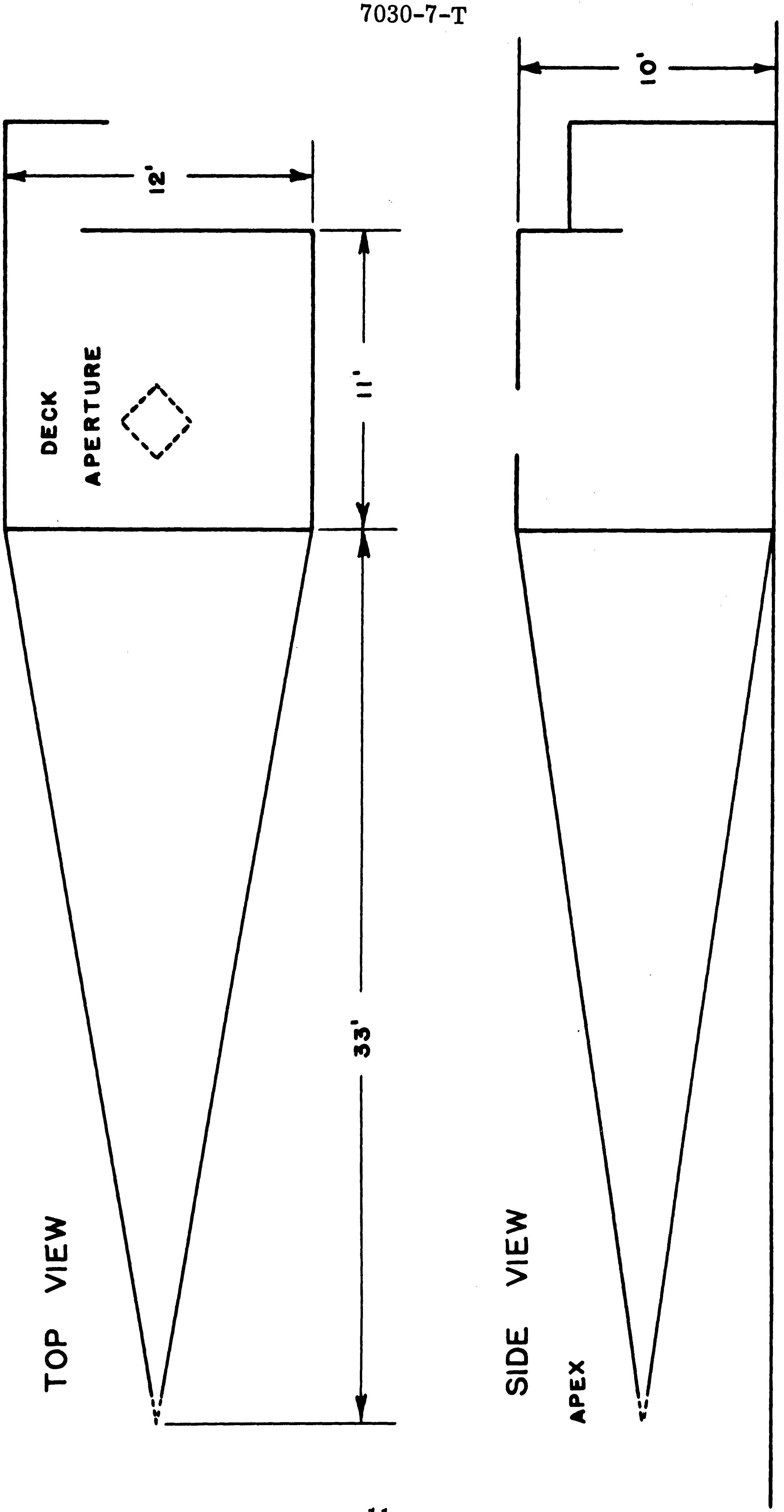

FIG. 3: SKETCH OF CHAMBER (INSIDE DIMENSIONS ARE GIVEN)

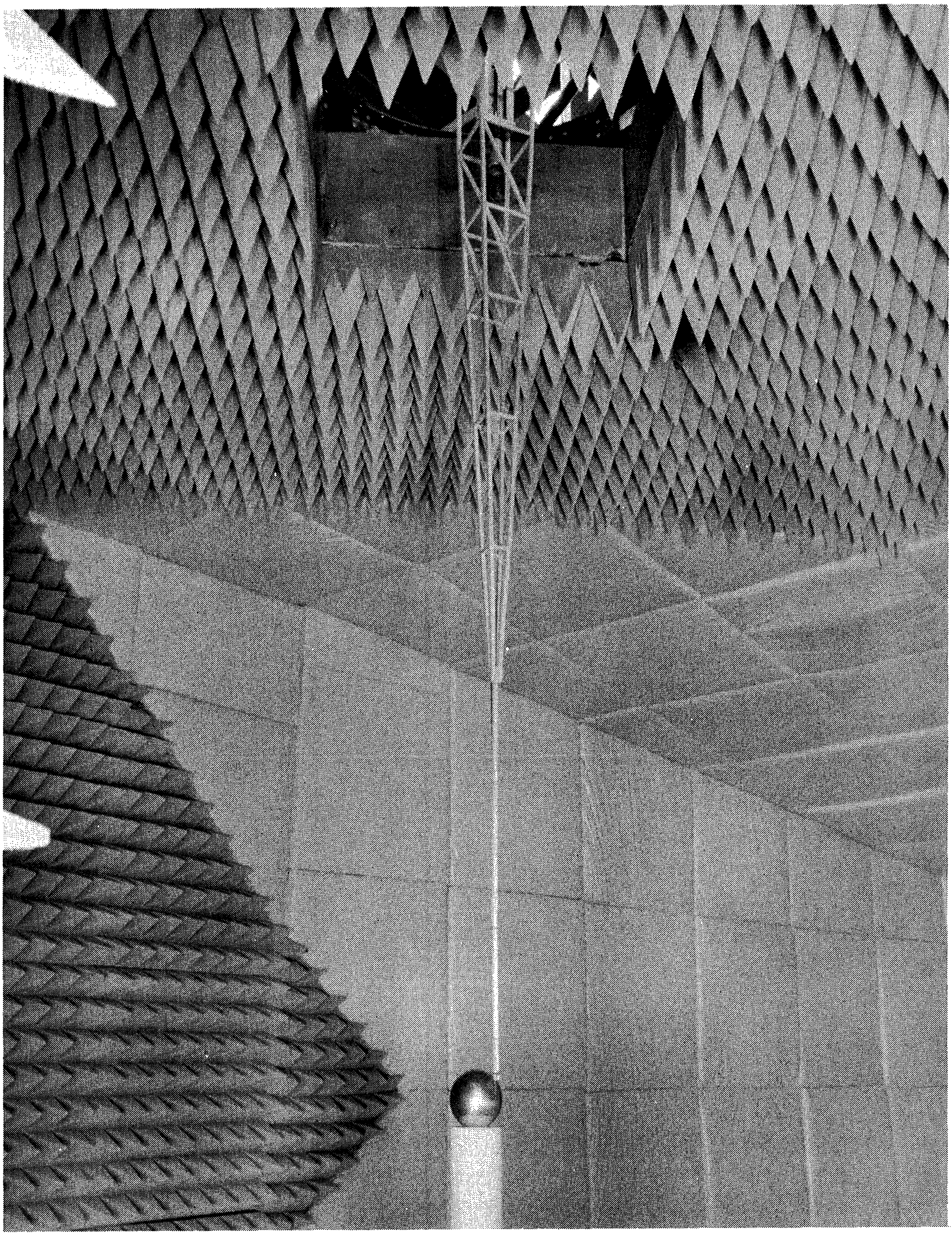

FIG. 4: VIEW OF ANECHOIC CHAMBER AS VIEWED FROM ENTRANCE BAFFLE

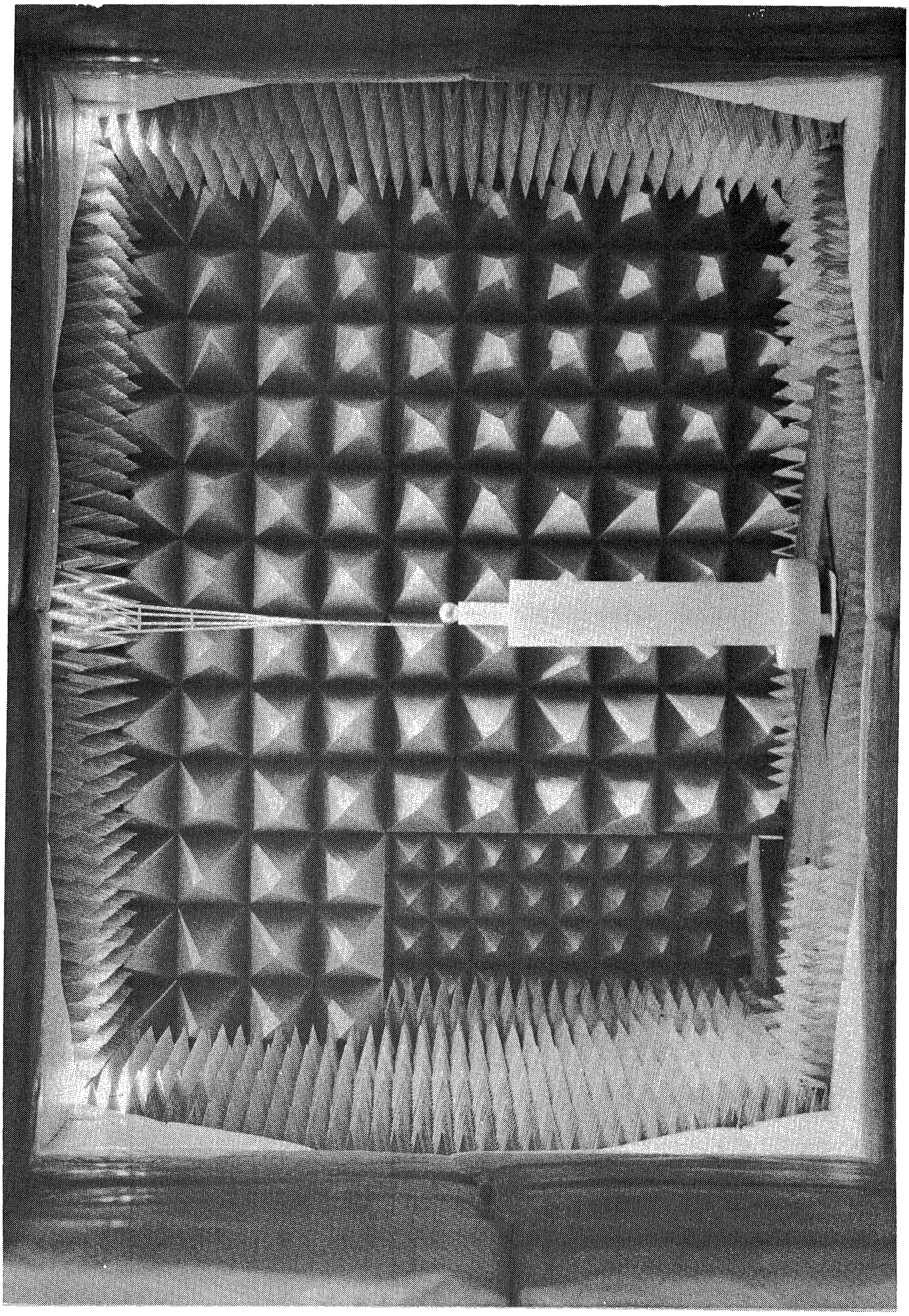

FIG. 5: PHOTOGRAPH OF ANECHOIC CHAMBER AS VIEWED FROM THE APEX

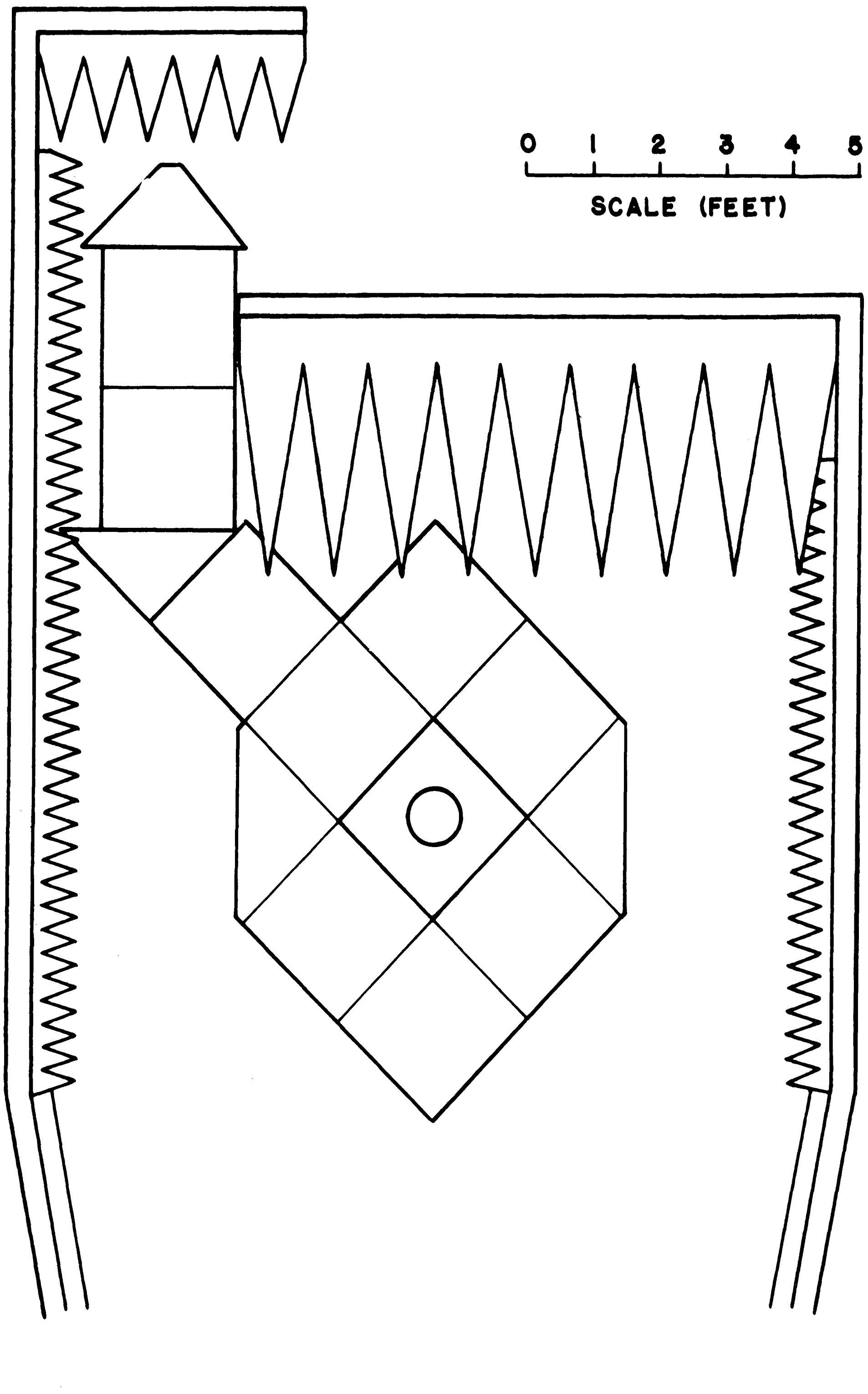

FIG. 6: SKETCH OF THE RECTANGULAR TEST REGION OF THE CHAMBER

test region which illustrates the rear entrance baffle arrangement and may give the reader some idea of the size of chamber. Three kinds of absorber are used: hair, high performance and walkway. The hair material, called HV-4, is low cost, moderate performance material suitable for use on the tapered walls where specular reflections are small and high performance is not required. The high performance materials (VHP) are reserved for the test portion of the chamber whose rear wall bears VHP-45* and whose side walls and ceiling are lined with VHP-8; the rear wall of the baffle is covered with VHP-18. Eleven 2-foot square panels of PD-4, a special walkway absorber, are used on the floor of the test region; there were originally twelve, but one was removed so that a rotary vise could be bolted directly to the floor. The vise, which can be cranked in x, y, or θ directions, bears a Styrofoam support column and is invaluable for model alignment purposes.

The chamber was completed in February, 1965 but due to lack of equipment was not evaluated until April. The evaluation was performed at four frequencies by sampling the standing wave structure in the room due to reflections. The process is called by B. F. Goodrich the "Free Space VSWR" technique and a description of it may be found in many of its reports [5] . A small pickup antenna is moved in trajectories parallel to and transverse to the room axis and the resulting signal fluctuations are used to deduce the strength and direction of sources of interference. Generally the transverse scans indicate the performance of the side walls while the longitudinal scans evaluate the rear wall. During the course of the chamber evaluation, which is summarized in Table 1, a source of interference appeared to lie near the rear entrance baffle. Other experiments were performed in which a change in baffle geometry was simulated by absorber panels and these showed that the per-

---

* The numbers refer to the thickness of the material in inches, measured from bulkhead to pyramid tips.

formance could be somewhat improved over the values given in Table 1. The change in baffle geometry, however, was not incorporated in the chamber design because of the time loss it would involve and because of the inconvenient entrance arrangement required. The measured chamber performance does not follow the expected trend of improved performance with increasing frequency, but due to lack of time the causes were not determined.

Table 1: Summary of Chamber Evaluation

Frequency, GHz[*]	Worst Performance, db
1.30	-45.2
3.00	-40.4
5.50	-55.8
9.45	-51.3

The absorber arrangement shown in Figure 4 represents an attempt to reduce the interference effects discovered in the model chamber tests. The philosophy which influenced the design is the same as that used in the design of waveguide matched loads. One attempts, in the latter case, to stretch out the discontinuity so that the incident wave does not encounter the lossy material all at once, but rather gradually. The result is that one uses a spear of lossy material pointed down the waveguide toward the incident guided wave. Likewise, the discontinuity between two regions of the chamber walls bearing different kinds of absorber can be treated by stretching out one kind of absorber into the other. The final result seen in Figure 4 shows the high performance material faired into the hair material like a broad arrowhead. This is the same technique used by B. F. Goodrich in the design of all its tapered chambers.

---

[*] Hz = cycles per second

III

DESIGN OF THE TRAVERSING EQUIPMENT

Early consideration had been given to the manner in which the measurements might be made in the surface field facility. It had been decided from the very beginning that the probe should be moved from above the chamber ceiling, but the exact details had not been defined. One possibility was that of stationing the operator on the deck with the traversing and RF equipment so that he could turn the appropriate cranks and read the necessary dials during measurements. Under these conditions, the positioning equipment could be very simple, since it could be manually operated, and the signal detection system would be close to the probe itself. This idea was quickly abandoned. Liepa's work had showed that the operator must often inspect the probe position on the target at close range and this would have entailed a great deal of clambering up and down the ladder. In addition, the deck is very small and activity there would be uncomfortably restricted.

A better arrangement would be for all activities to take place at the level of the chamber floor, namely in the control room, with only occasional trips up the ladder being required for set-up and adjustment purposes. The positioning equipment would, therefore, have to be remotely controllable from the control room but the additional complexity of the equipment would be more than offset by the convenience, speed and versatility it gave the measurement operation. Accordingly, the design and construction of the probe positioning system was undertaken. Since standard stock products were desired as much as possible to reduce initial cost and maintenance and since it was usually several days before a stock item could be found, the construction phase of the effort was often only a few hours behind the design phase. As a result of the design-as-you-go technique, the exact form of the finished product was not known in the beginning, although its function was well defined.

It was known that cone-sphere shapes were of primary concern and for convenience the system should be capable of x, y, and θ directions of motion. The θ capability would serve to align the x-direction with the slant of the cone and the y-direction would be used to bring the probe toward or away from the cone surface. For the spherical portion of the object the probe could be held on the surface while θ be varied to sweep around from join to join. A z-direction capability was also desired to permit model placement in other than a fixed horizontal plane and to otherwise provide for vertical motion.

The probe traversing equipment is shown in Figure 7. The entire system is built upon a gun turret ring which provides a solid rotating platform in addition to the azimuthal scanning capability. The gun mount has a ring gear which was later used for azimuth drive and azimuth sensing devices, but these units were not installed until after the photograph of Figure 7 was taken. The gun mount consists of inner and outer housings which are fitted together by means of an internal track and roller system. The structure is light, strong, and is admirably suited for its task.

As viewed in the photograph, the turret ring is centered over a 2-foot square hole in the deck above the anechoic chamber. A portion of the side walls of the chamber below is clearly visible, as is the edge of the absorber attached to the ceiling. Two lengths of 4-inch aluminum channel are bolted to the top of the turret ring and at the ends of each channel are fastened mounting brackets for two large lathe screws. The lathe screws are linked to each other and to a drive motor by means of sprockets and roller chain, which also passes over an idler sprocket driving a selsyn.* The tooth ratio between selsyn and lathe screw sprockets was se-

---

* Selsyns are used in pairs for the purpose of remote indication of angular shaft positions: the shaft position of a remote transmitter selsyn is accurately duplicated by the shaft of a receiving selsyn, yet the only connection between them is electrical.

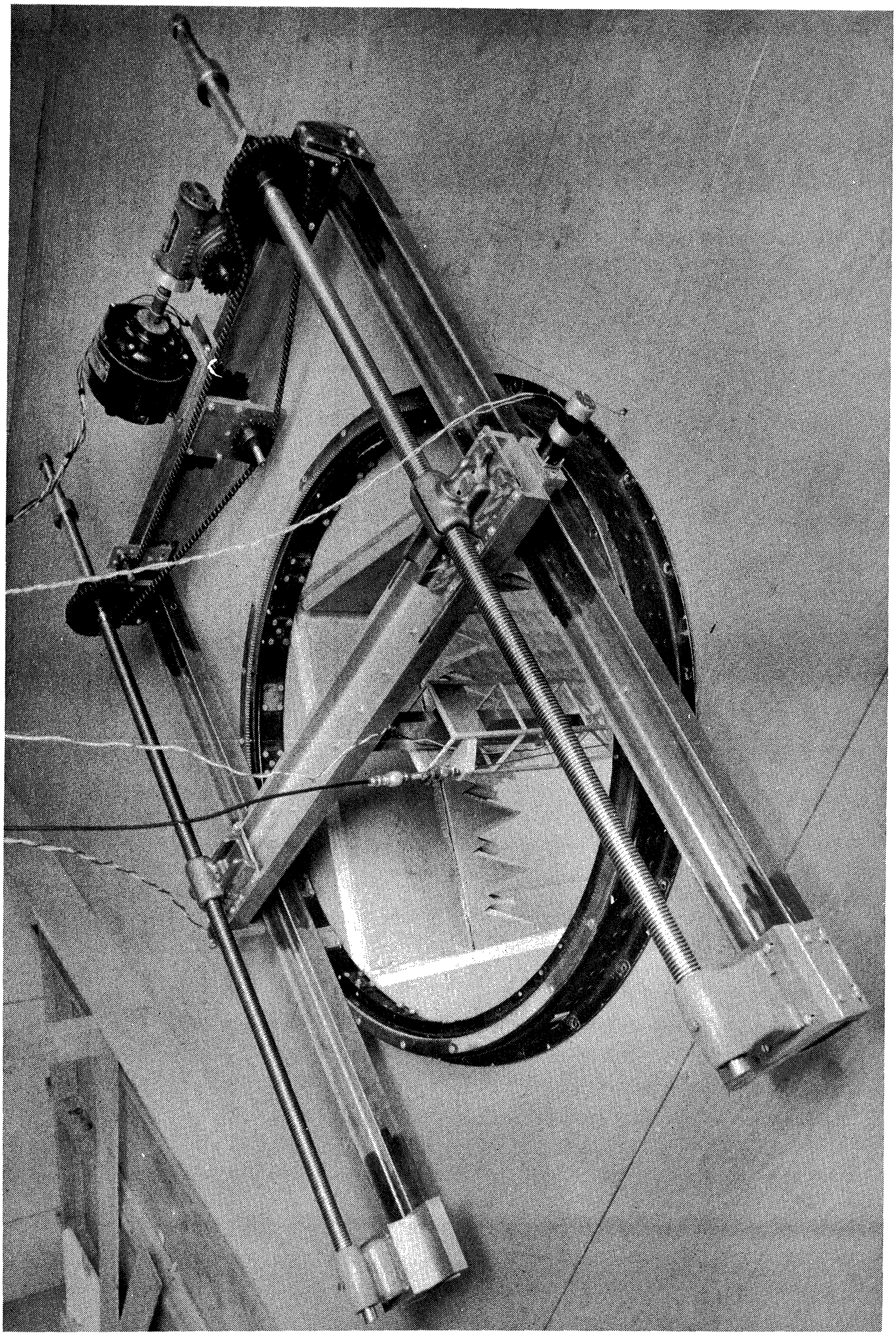

FIG. 7: PHOTOGRAPH OF PROBE TRAVERSING MECHANISM

lected so that 10 selsyn revolutions correspond to one inch of screw thread advancement. This selsyn is hidden behind the mounting bracket directly below the large drive motor in the background. The lathe screws are capable of nearly 4 feet of traverse but because of the size of the deck aperture, not all this capacity is used.

Bridging the two large screws is another section of 4-inch channel. It is supported by the lathe screws, as well as being driven by them, and it forms a rigid platform for two instrument slides attached to its lower surface. The instrument slides are grooved aluminum blocks, as illustrated in Figure 8, fitted with screw-driven sliders, and since they were available in maximum lengths of only 18 inches, two had to be obtained and butted together. The butt joint between them was carefully adjusted by the insertion and removal of shims and although the slider passed smoothly from one to the other there was still a small discontinuity in motion that could not be eliminated. The slider is driven by a precision stainless steel threaded rod having 20 threads per inch and which is in turn driven by a small DC motor. The motor, which is the small short cylinder seen somewhat to the right and below the center of Figure 7, is attached to one end of the screw and a selsyn, not visible in the picture is attached to the other end. The selsyn shaft thus revolves 20 times for every inch of slider traverse.

A third instrument slide 15 inches long is attached to the slider described above and gives the system its vertical traverse capability. A small DC motor is mounted at the lower end of the slide, out of view in the picture, in the same fashion as that which provides the cross motion above. This slide projects downward into the deck aperture and, unlike the other directions of motion, bears no selsyn for position information. The slider of the vertical slide supports a hollow rigid structure made of balsa wood which surrounds the slide itself. This structure is the tower which projects downward from the deck aperture in Figures 4 and 5, and its function is to stiffen and support the probe lead. The probe output signal is detected

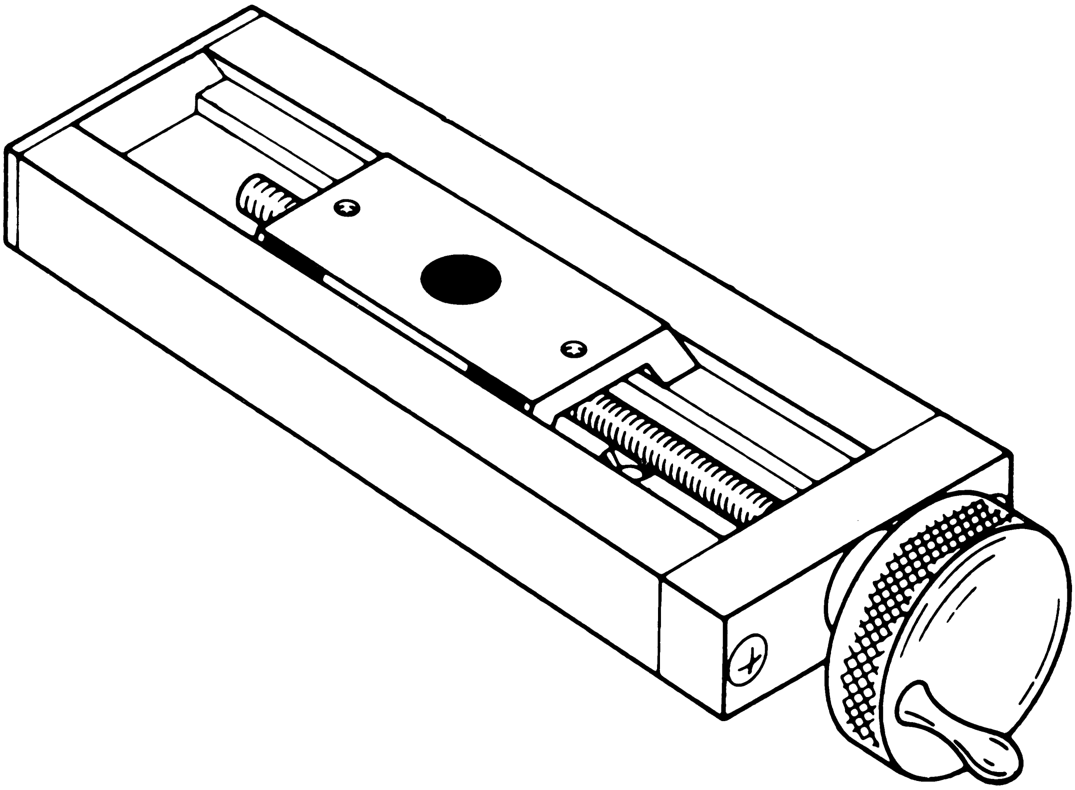

FIG. 8: SKETCH OF INSTRUMENT SLIDE TYPICAL OF THOSE USED IN THE POSITIONING EQUIPMENT

near the top of the tower and is delivered to the receiver by means of the slender dark cable running vertically through the center of the picture.

All the electrical connections to the probe traversing equipment are made to a pair of terminal strips mounted in the ceiling above the mechanism. The various wires and cables are loosely suspended so that the equipment may be traversed or rotated to its extreme positions without danger of severing the connections. The terminal strips are connected to the appropriate instruments in the control room below by means of multiconductor cables.

A master control unit provides the DC voltages which run the motors as well as the 60 cycle AC voltages applied to the selsyn transmitters mounted on the traversing mechanism. The same DC source is used to drive each motor and a selector switch is used to apply the voltage to whichever drive motor is desired. The probe motion can therefore take place in only one direction at a time. Another switch, which performs the same function, is housed in a small portable box connected by a long cable to the master control unit and can be taken by the operator into the chamber. This permits him to stand near the target and to control the probe motion while actually observing it at close range.

The receiver selsyns are mounted in the master control unit and are driven electrically by the transmitting selsyns in the probe positioning mechanism. The receiver selsyns are mechanically coupled to small indicators which therefore register probe position. For the x and y motions, small instrument counters are used as indicators and the coupling between them and the selsyns has been selected so that the counters register probe position directly in inches. The azimuth indicator is a 5-inch diameter drum whose perimeter is divided into 360 equal divisions. The x and y position counters can be read with an accuracy of 0.005 inch and the azimuth indicator drum can be used to within 1/4 degree.

The positioning mechanism, although it performed its job well, developed two distinct vagaries, each along a different direction of motion. Firstly, it was discovered that the spin axis of the turret ring, which is ideally an imaginary vertical line fixed in space, nutated in an irregular fashion as the ring was rotated. The results were that the probe, when rotated in a circle of arbitrary size, actually described a pear shaped figure with a maximum total radial variation of about 3 millimeters. But since the probe is always brought to bear upon the surface of the test object and is therefore guided radially by the surface, the spin axis nutation was of no consequence. In fact, considering the nature of construction of the ring, a 3 millimeter error over a span of nearly a meter seems quite acceptable.

The second perturbation has already been discussed and is due to the discontinuity between the two instrument slides which were mounted end to end. When the slide reaches the junction the probe makes an abrupt lateral shift in its motion and after the slider passes the junction the probe shifts back to its original trajectory. The shortcoming has been avoided by the use of this direction of motion to adjust the probe position toward or away from the test object surface, which is not a critical adjustment and for which the slider is not ordinarily near the discontinuity.

Often the test object has a shape so complex that the probe position on the surface cannot be adjusted by the use of only one direction of motion. This occurs, for example, on the surface of a prolate spheroid and two separate motions, say x and θ, are required to move the probe along the surface. For these cases a scale is drawn upon a length of transparent tape which is then carefully fastened to the obstacle along the desired trajectory. The scale markings are then used, instead of the indicator dial readings, to describe the probe position along its traverse. For the frequencies and tape thicknesses typically used, the tape has no observable effect.

IV

PROBES

Probably the smallest and most important components of a surface field measurement facility are the probes which are used to sample the induced fields on the target. Liepa's early probes were diode loops, formed as shown in Figure 9. The incident energy upon the target was modulated at a 1000 Hz rate and the circulating RF currents induced in the loop by the surface field were detected by the diodes. The probe output voltage was a 1000 Hz signal which was then fed to an audio amplifier. The strength of this signal was directly proportional to the field strength sampled on the target, so the amplifier output gave a direct measure of the strength of the surface field. The system worked well but required a relatively strong RF source and worse, the probes were large and unduly sensitive to electric fields. The size of the loops could be reduced by the use of very small diodes, but they were still uncomfortably large.

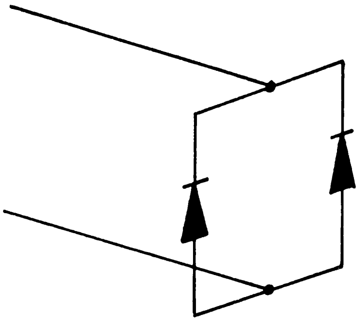

FIG. 9: LIEPA'S DIODE LOOP

Since then several kinds of loops have been constructed and evaluated, none with non-linear components in the loop itself, and of all of them, the simple unbalanced shielded loop has proven to be the easiest to use. When one uses these probes the crystal diode detector is placed remote from the probe and the RF signal is delivered to it by means of a small rigid coaxial line. This permits the construction of smaller loops, the goal one seeks in order to reduce probe perturbation effects on the surface field being measured. This small size, on the other hand, requires a great deal of skill and patience of the craftsman who constructs them.

Figure 10 illustrates the construction sequence of the unbalanced shielded loop probe. It is made of semi-rigid coaxial line and the first step is that of wrapping 3 or 4 turns of the line about an appropriately sized cylinder, whose diameter must usually be no smaller than 3 times the outer diameter of the coaxial line. Next all the turns are cut off except the first, leaving slightly more than one turn. A portion of the outer conductor and dielectric near the end is then removed, exposing a short length of the inner conductor which is then folded to one side to contact the outer conductor. The ends of both inner and outer conductors are then soldered to the body of the probe with a low melting point solder. Next a very thin break in the outer conductor is cut with a sharp knife or razor blade. The gap formed this way is cleaned out with a hair or very fine thread and, if necessary, the knife is used again, alternatively with the thread, to provide a clean, fine separation. Gap widths as small as 0.001 inch have been obtained with this technique. A tiny drop of epoxy resin is applied to the region of the gap which serves to electrically insulate the probe from the surface against which it rests and to mechanically strengthen the loop.

The probes fashioned may be made quite small if the craftsman has enough skill, patience, and experience. The outer diameters of typical coaxial lines with which probes are made are 0.021 inch and 0.030 inch, and a large diameter line, 0.085 inch, has been occasionally used for low frequency probes. The overall loop diameter can be held as small as 0.1 inch, but none smaller than this have been successfully completed. A photograph of some typical probes can be seen in Figure 11.

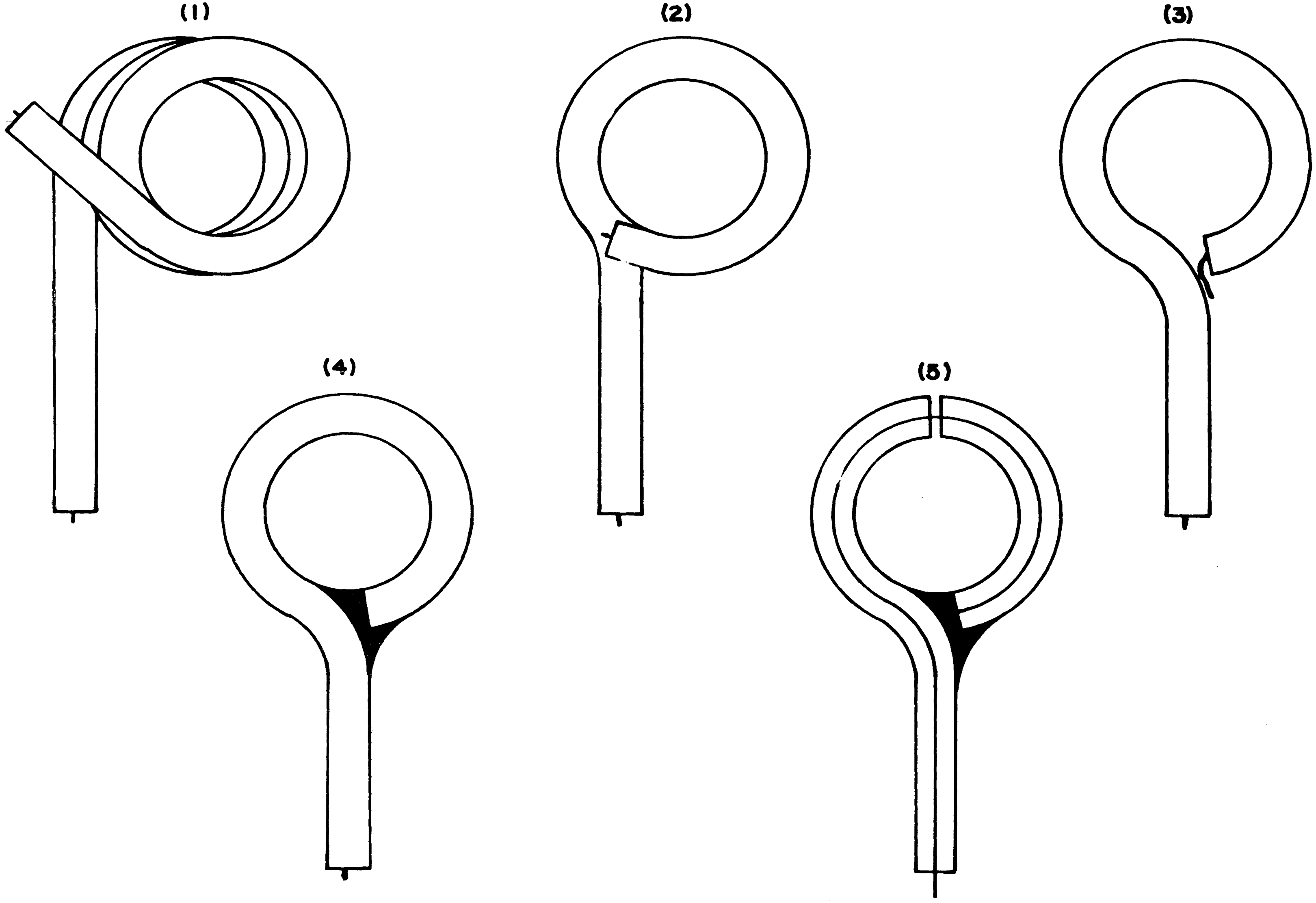

FIG. 10: STEPS IN THE PROBE CONSTRUCTION SEQUENCE

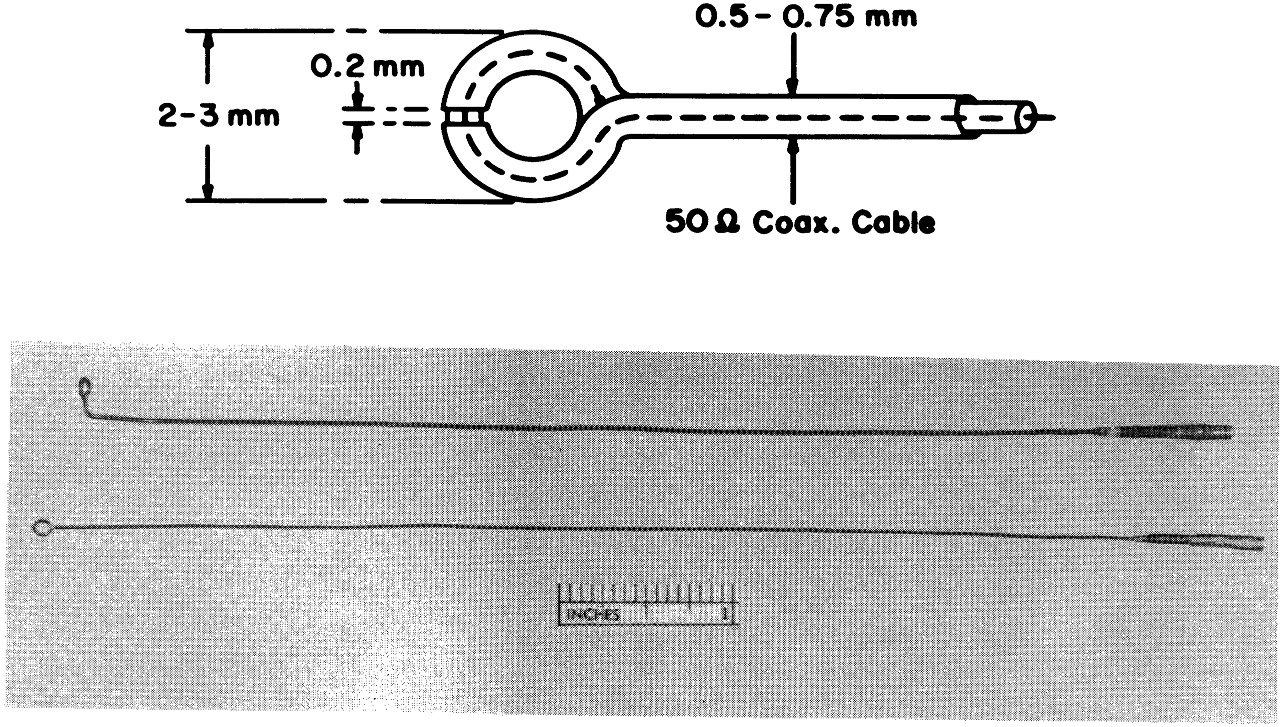

FIG. 11: PHOTOGRAPH AND DIMENSIONS OF TYPICAL UNBALANCED SHIELDED PROBES.

The output voltage of the probe described above is a measure of the normal component of the average magnetic field intensity, H_n, threading the loop,

$$V = CfH_nS$$

where f is the frequency, S is the area of the loop, and C is a constant [6]. The equation shows that the output voltage increases with frequency as well as with the size of the loop, which is desirable but runs counter to the need for small loops with small perturbation effects. It should be noted that it does not matter if the magnetic field to be measured is in a free space environment or if it lies near a conducting surface; the loop is capable of sensing both. At the surface, the currents are perpendicular to the tangential magnetic field and one must orient the plane of the loop parallel to the direction of the current component which is desired to be measured as well as perpendicular to the surface.

It turns out however, that the probe is sensitive to electric as well as magnetic fields, an effect that was considered in detail by Whiteside [7]. His work included an examination of symmetric and anti-symmetric currents induced upon a loop when immersed in an electromagnetic field and he found the electric sensitivity to be a function of the loop geometry, independent of the nature of the gap. The same has been true of all the probes made at the Radiation Laboratory and each probe responds differently to the electric field. The electric sensitivity can usually be quickly assessed by merely rotating the probe about its axis and noting the corresponding changes in the output signal strength. The signal variations arise from electrically induced voltages adding first in phase then out of phase with the magnetically induced voltage as the probe is rotated. Some of the better probes have a total signal variation upon rotation of only 0.2 db while others are as poor as 0.7 db. These are typical values for S-band frequencies and they become progressively worse as the frequency increases, reaching 1.2 db and 2.2 db, respectively, at X-band.

The electric sensitivity becomes a problem when the probe is brought near a conducting surface. A signal proportional to the radial electric field combines with the desired signal due to magnetic field and it does so with an unknown amplitude and phase. If the object being measured is symmetrical and is immersed symmetrically in the incident field, the probe may be positioned on the opposite side of the object and the signal compared with that observed on the first side. Here the voltage due to electric field has the same amplitude but opposite phase to that on the original side, hence if the total values observed on both sides are averaged, the undesired component may be removed from the measurement if it is not too large. This phenomenon was observed in the very first surface field measurements made in the facility and it has become convention that all objects be measured on both sides so that the error may be removed from the measured data. The method, it should be pointed out, does not work in asymmetrical cases, such as for a cone-sphere obliquely illuminated.

The worth of the side-to-side averaging process may be demonstrated by examination of measurements performed upon a sphere. The sphere is installed as shown in Figure 12 and the probe is scanned all the way around the sphere in a horizontal plane. (The probe is an unbalanced shielded loop but this is not apparent in the figure since the plane of the loop happens to lie along the observer's line of sight). Typical data for a sphere 1.6 wavelengths in circumference may be found in Figures 13 and 14 where the azimuth convention used is that the incident wave first strikes the sphere at $\theta = 0$ degrees. It can be seen in Figure 13 that the measured surface currents were greater than theoretical on the left side and smaller than theoretical on the right side. When the data are averaged about the zero aspect, however, the resulting values lie very nearly on the theoretical curve

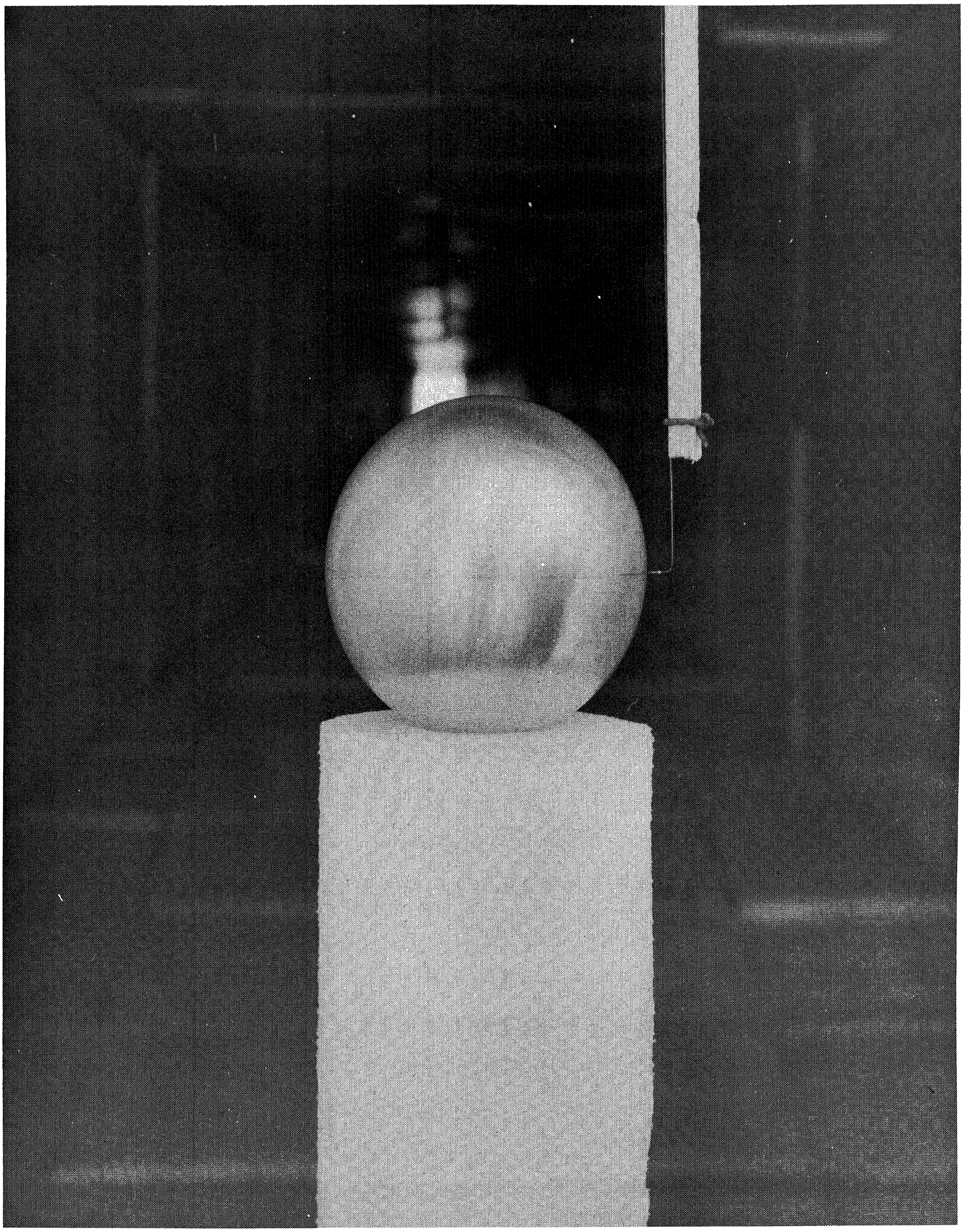

FIG. 12: CLOSE-UP VIEW OF SPHERE BEING PROBED
(SPHERE DIAMETER = 2.945 INCHES)

shown in Figure 14. The reader is cautioned that the abscissa of Figure 14 runs only from front to back (and not to the front again) since all the information of Figure 13 was used to obtain it. The agreement between the averaged values and theory is very good and similar results have been obtained for other spheres measured at other frequencies.

Since the phase of the electrically-induced error voltage depends upon the dextrality ("handedness") of the loop, one might expect exactly the opposite effects if a loop were used which was sinistral instead of dextral (left-handed instead of right-handed)*. This was verified by experiment and the results led to the design and construction of a probe whose loop could be swiveled to convert it from dextral to sinistral and vice-versa. The ambidextrous probe was intended to be used in asymmetrical cases for which the averaging process is useless. The idea here is that the object may be scanned twice, once each with the loop oriented in dextral and sinistral senses, and the data from the two runs should average to the correct value. The probe saw limited use, however, since the swivel contacts were not perfect and the data showed some random variations. The ambidextrous probe was not used in symmetrical situations, other than for evaluation purposes, since an ordinary probe would suffice in these cases if the object is scanned on both sides of the plane of symmetry.

The unbalanced shielded loop probe senses the radial electric field at the obstacle surface, a fact which was aptly demonstrated by Liepa from a comparison of the measured values with the theoretical results known for a sphere [8]. He assumed that the probe voltage output had a signal component proportional to the radial electric field, and permitted the proportionality constant to be complex. Using four of the measured values he deduced the value of this constant, which was

---

*The loop shown in Figure 10 is a dextral probe.

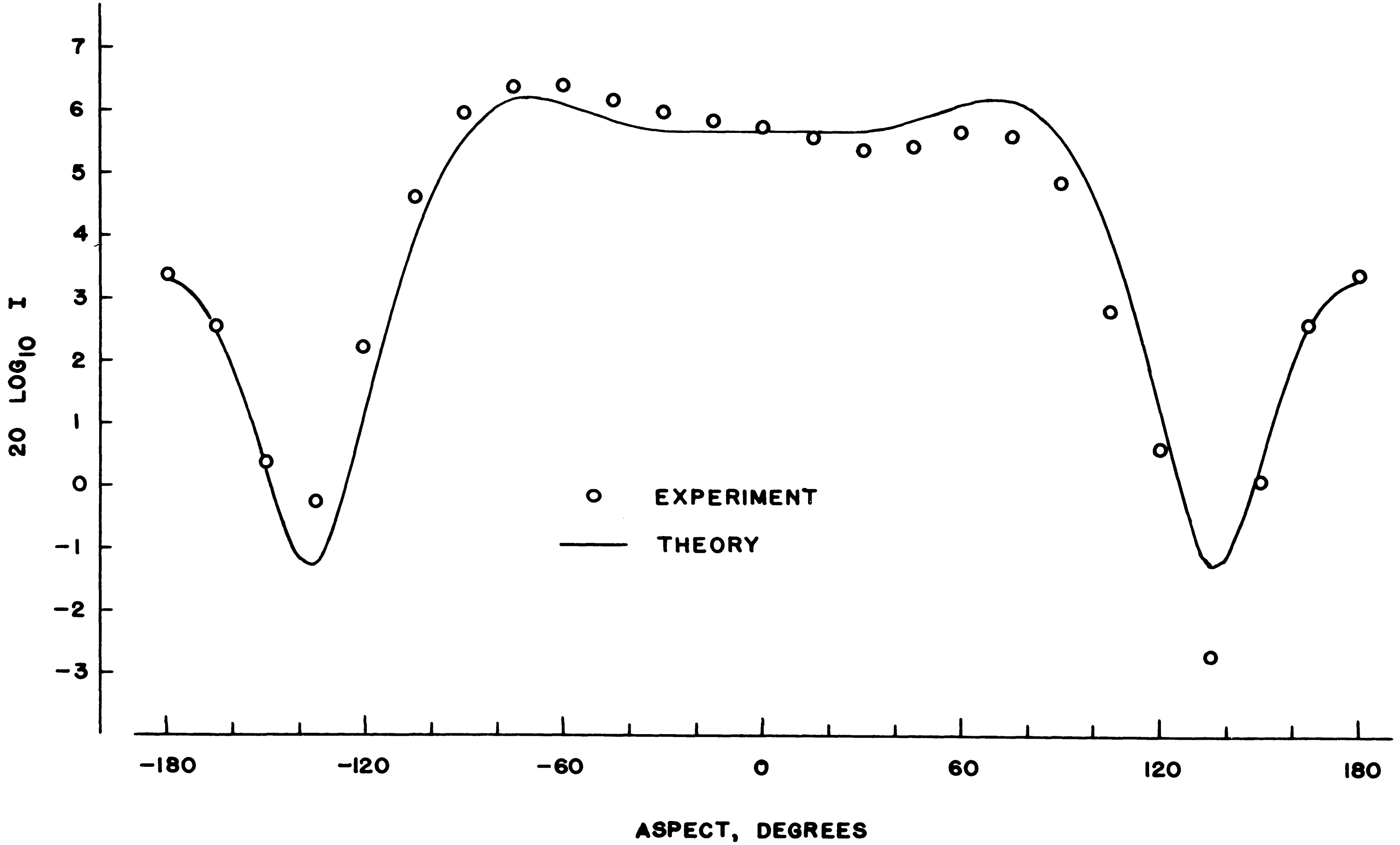

FIG. 13: COMPARISON OF MEASURED CURRENTS WITH THEORY FOR A SPHERE 1.6 WAVELENGTHS IN CIRCUMFERENCE

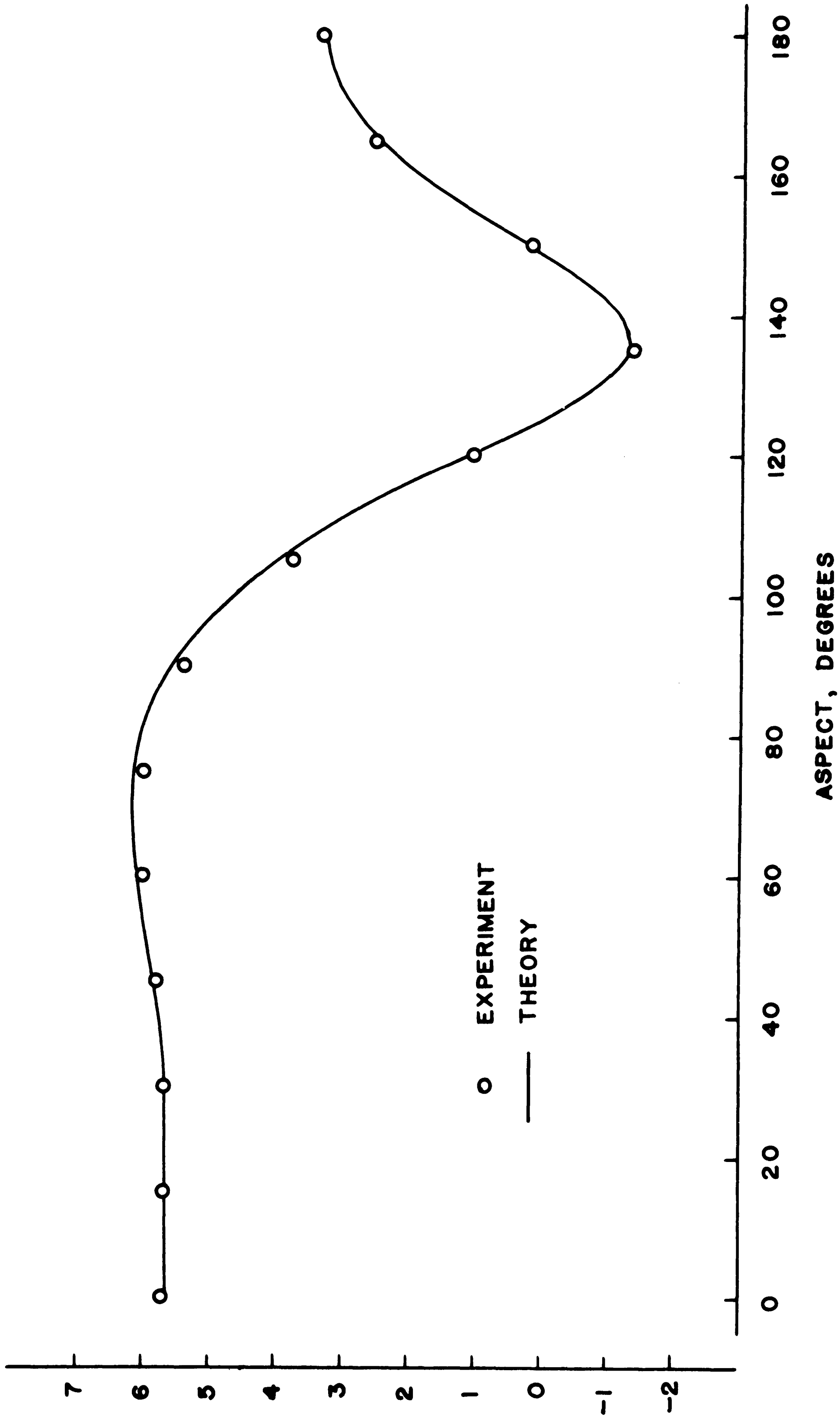

FIG. 14: COMPARISON OF AVERAGED EXPERIMENTAL CURRENTS WITH THEORY FOR A SPHERE 1.6 WAVELENGTHS IN CIRCUMFERENCE

then used to predict all the other observed data for the sphere at this frequency. The results agreed nearly perfectly with the measured data, which suggests that the model was correct.

Several other kinds of probes were constructed, among them electric monopoles, electric dipoles, balanced loops, and even shielded twin line loops. Not much work has been done with the electric probes, since most of the measurements so far performed in the facility have been upon perfectly conducting obstacles which are known to support only normal electric and tangential magnetic fields. The balanced loops, in which the voltages due to electric field are removed by devices connected to the output, were tested but gave no better results than the simple unbalanced loops. A balanced probe having two identical loops was designed in which the balancing process occurs in the loops themselves and is accomplished purely by geometry but the probe requires such precise control of dimensions that no one has yet been found who will build it. A sketch of the proposed balanced loop probe appears in Figure 15.

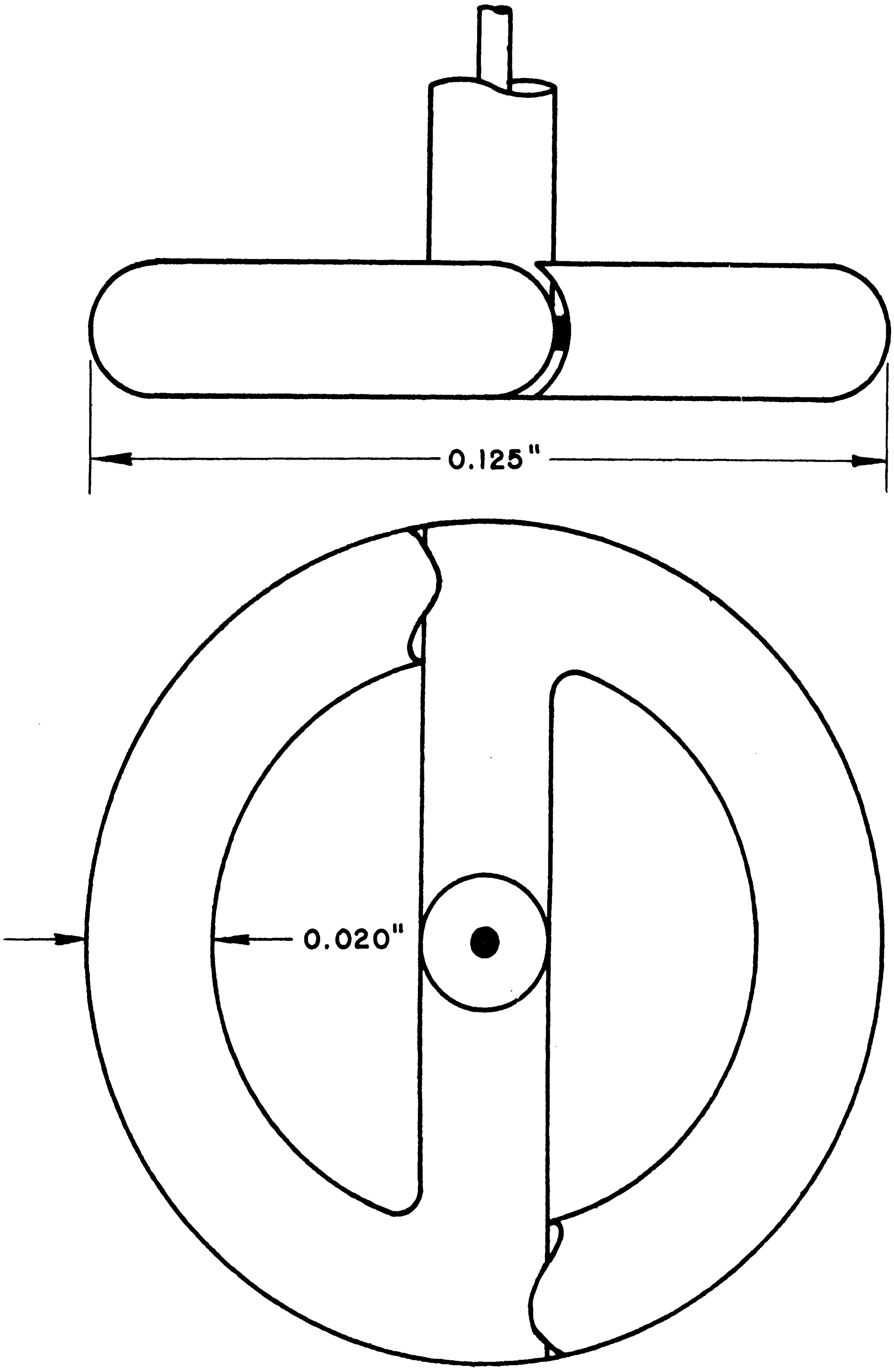

FIG. 15: SKETCH OF BALANCED LOOP SHIELDED PROBE

V

RADIO FREQUENCY COMPONENTS

The obstacle under test in the facility is illuminated exclusively by pyramidal horns positioned near the chamber apex as described in Section II. Four horns have been obtained, some of commercial manufacture and others constructed in University of Michigan shops, which cover the frequency range from 1 to 10 GHz. Due to the limitation of either the waveguide component characteristics or to the present availability of RF power sources in the laboratory, the frequencies of operation have been restricted to approximately the following bands: 1.0 to 1.7 GHz, 2.3 to 4.4 GHz, 5.0 to 6.0 GHz, 6.2 to 7.0 GHz, and 8.5 to 10.0 GHz. For frequencies through 4.4 GHz, the equipment is comprized of coaxial components, except for the horns, while above 5.0 GHz, waveguide components are used. Since the interaction between the incident electric field and the vertical probe lead is to be minimized, the incident electric field is always horizontally polarized and the horns are installed accordingly.

A block diagram of the typical sending end equipment is shown in Figure 16. It should be noted that some of the components, the klystron power supply, for example, are used for all frequencies. The system is conventional and the signal output is unmodulated CW. A sample of the transmitted energy is delivered by means of rigid coaxial line to the control room where it is used to operate the receiver automatic gain control circuits and occasionally to provide a reference signal for phase measurements. When phase measurements are to be made, a conventional klystron synchronizer is inserted between the klystron and its power supply to provide frequency stability. The power transmitted is typically a few hundred milliwatts.

The energy emanates from the antenna, floods the interior of the chamber with radiation, and shines upon the obstacle under test. The currents induced on the object are sensed by the probe and the signal output is delivered to a mixer mounted near the top of the probe support structure, as in Figure 17. In the mixer the probe signal is combined with the local oscillator signal from a superheterodyne receiver

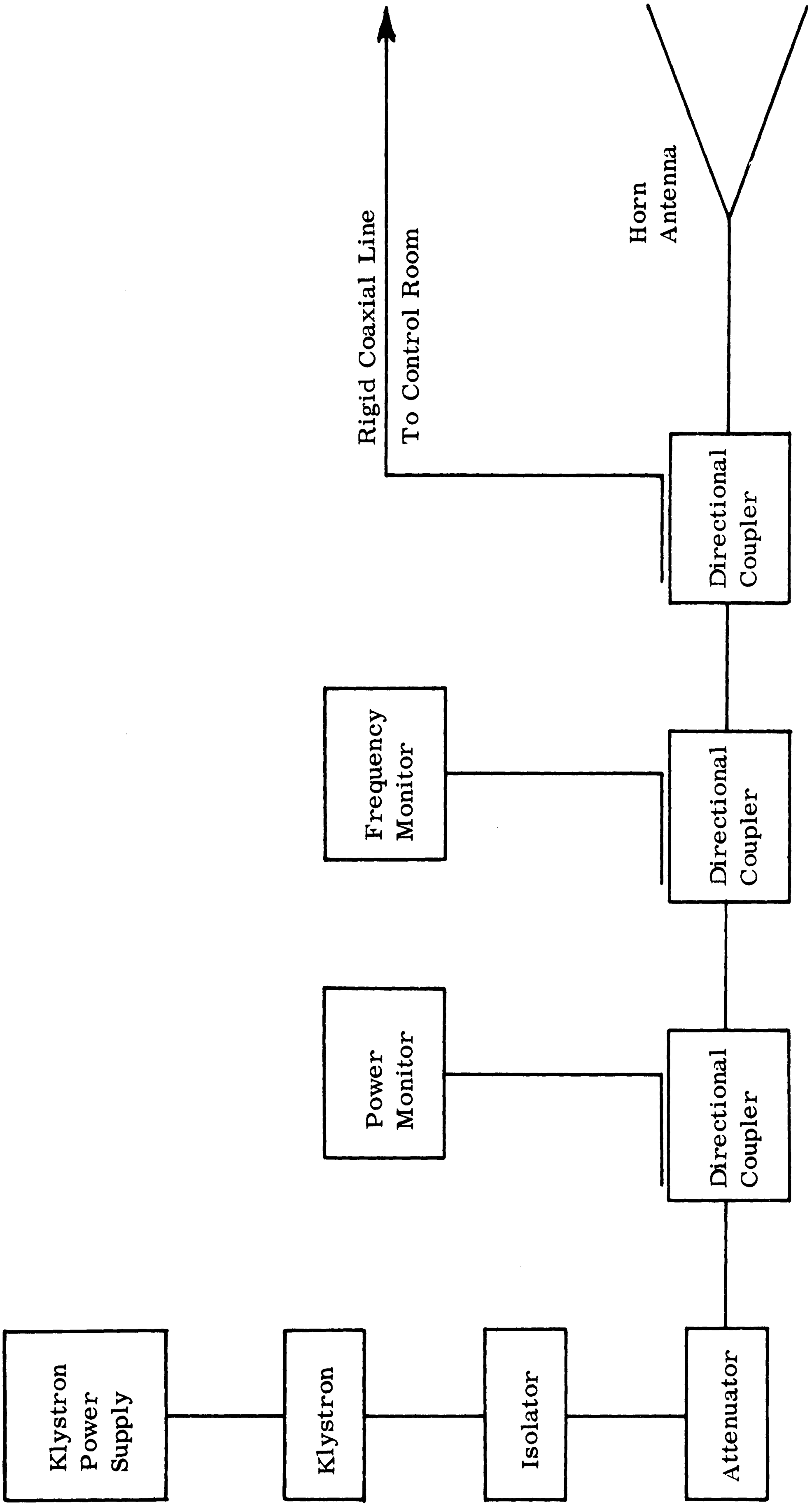

FIG. 16: BLOCK DIAGRAM OF SENDING END EQUIPMENT

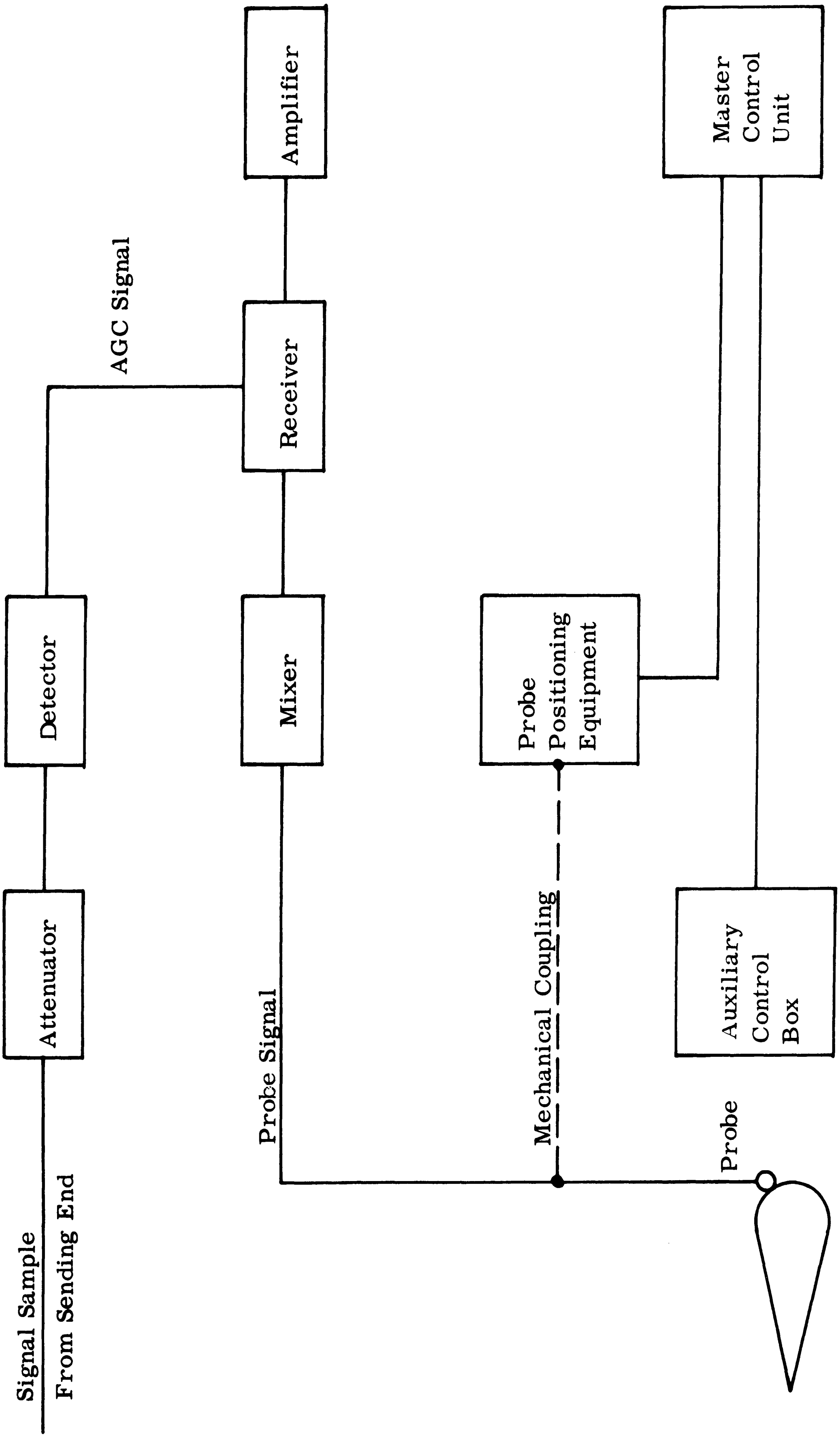

FIG. 17: BLOCK DIAGRAM OF RECEIVING EQUIPMENT FOR AMPLITUDE MEASUREMENTS

and the difference frequency is fed to the IF amplifiers in the receiver. The signal is modulated at 1000 Hz to render it suitable for the input of an audio amplifier after which the amplified signal is finally displayed on an output meter calibrated in decibels. A reference signal derived from the transmitter is detected and used by the receiver to adjust its own gain to compensate for small fluctuations in transmitted power. All other things being constant, if the transmitted signal falls by 3 db, the output signal display changes by less than 0.5 db due to the compensating action of the AGC circuit. In passing, it should be noted that the receiver is a necessity because the probe output signal is small, typically 10^{-9} watt or less.

The discussion above applies only to the receiving system when the amplitude of the surface field is desired and the more complex system of Figure 18 is used when phase as well as amplitude is required. In this arrangement the probe signal is compared to a controllable reference signal in a hybrid tee. It will be seen that the probe signal and the reference signal are both delivered to the tee but that the latter is first passed through a coaxial switch. When the switch is closed both signals are present and the operator commences tuning both the attenuator and the phase shifter in the reference arm, seeking a null indication (no signal) on the receiver. When he has obtained a null, signifying that reference and probe signals have the same amplitude but opposite phase, he records the phase shifter reading. The switch is then thrown open, permitting only the probe signal to enter the receiver circuits, and the signal level is displayed as in the case when only amplitude is measured. Thus the phase measurement is performed with the switch closed and the amplitude is measured with the switch open. During the measurement, of course the probe is held at the desired point on the surface to be probed: it is moved to the next position of interest only when the above sequence is completed.

This scheme is the one adopted in lieu of a more conventional system in which both phase and attenuation values are read from the dial settings of the respective

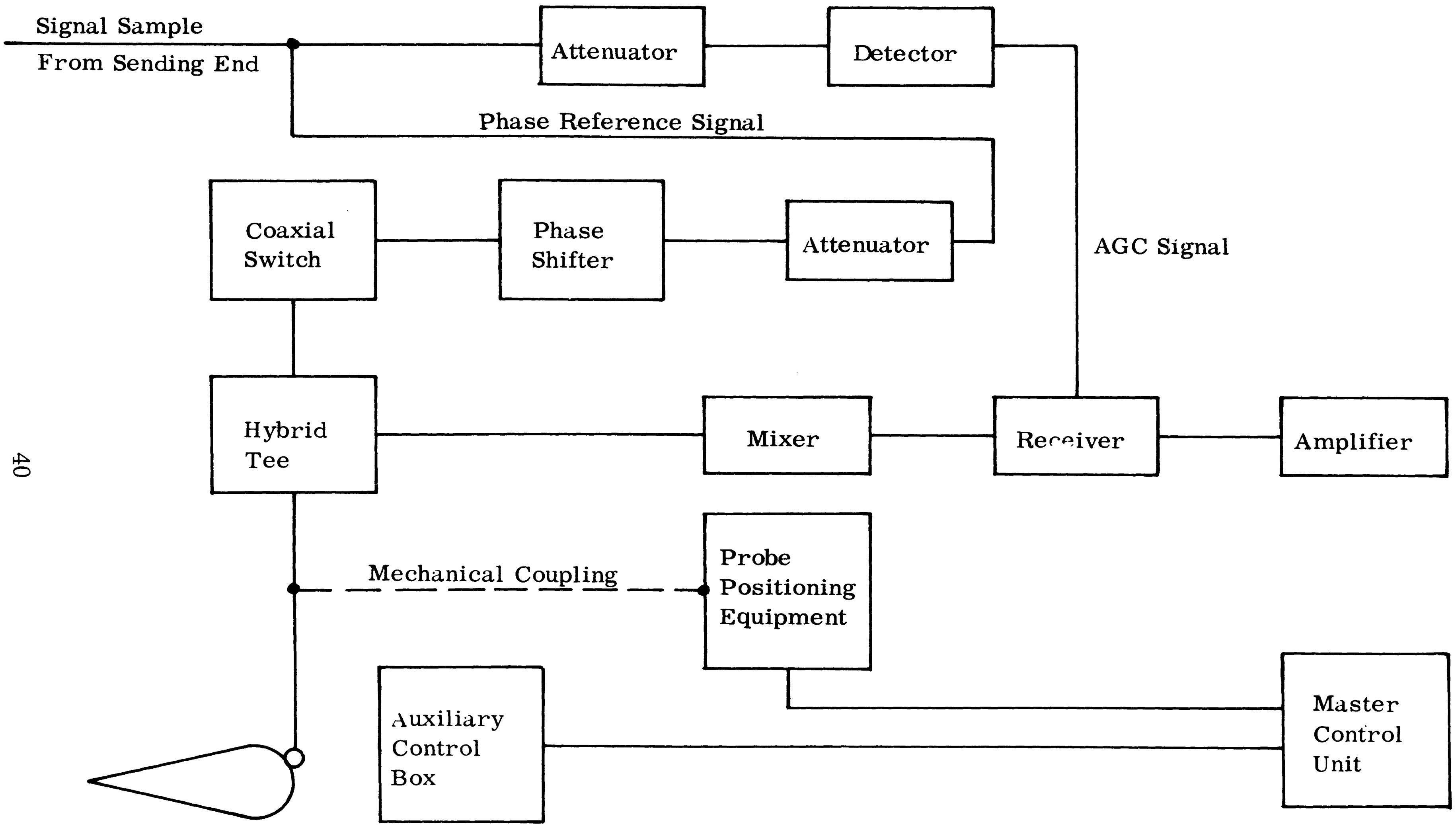

FIG. 18: BLOCK DIAGRAM OF RECEIVING EQUIPMENT FOR PHASE AND AMPLITUDE MEASUREMENTS

devices. Such a system requires that the attenuator be a precision one and that it have a negligible phase shift. This kind of attenuator is not only very expensive but it cannot perform the desired function with the desired accuracy over the 10 to 1 frequency band that is used in the facility. Instead, the receiver linearity over a 40 db range is utilized in the place of the attenuator, and the results have been quite good. It should be noted that all the phase angles determined this way are relative.

VI

MEASUREMENT TECHNIQUE

When a measurement is undertaken, the appropriate antenna is installed, aligned and energized in the chamber apex and a signal sample is fed to the control room at the rear of the chamber for receiver AGC purposes. The signal frequency is adjusted to within 1/10 percent of the desired frequency, and is periodically monitored. The region normally occupied by the test object is thus illuminated by energy of the proper frequency and, if desired, this region may be probed in a preliminary test to insure uniform amplitude and phase distribution. When the operator is satisfied with the incident field structure in test region, the model is installed on a Styrofoam support column. The column, it will be recalled, can be moved smoothly and continuously by means of the vise on the floor which holds the column.

The alignment of the test object with respect to the incident field is accomplished by manipulation of the vise and several ways are available by which the orientation is ascertained, depending upon the shape of the object and its desired orientation. A quick and surprisingly accurate alignment can be made for certain cases with the unaided eye. The cases for which the visual alignment is possible are those in which the object is a body of revolution illuminated end-on, and for other cases the probe traversing mechanism itself and a spirit level are useful. The mechanism can move the probe along straight lines in a horizontal plane at any desired angle with respect to the incident wave. Hence, the probe may be moved along the surface of the object in a pre-set trajectory and any departures of the probe from the object surface reveals the true alignment. Complex shapes can be aligned this way as long as they are bodies of revolution and if the observer is skilled. Occasionally, a combination of methods may be used in which one uses the traversing mechanism, a spirit level, and the unaided eye.

The latter can be a very effective alignment tool in several cases. If a body of revolution is to be leveled to a horizontal plane, its axis can be compared with the background of absorber which the observer sees in the chamber when he stands to the side of the body. The absorber has several horizontal and vertical lines formed by the joints between adjacent panels and these lines can be used as references with which to compare the orientation of the target axis. This is a simple process if the body has parallel sides (i.e., a cylinder) but requires more skill for cone-sphere shapes. Once the object has been leveled, it must still be aligned at the desired angle of incidence in the horizontal plane. Nose-on incidence is easy for the thin cylinder; one merely places the eye directly behind a surface element and rotates the object in the horizontal plane until that element points directly at the transmitting antenna. Nose-on alignment for a cone-sphere shape is augmented by the reflections from two overhead incandescent lamps from the target surface. These reflections appear as a straight line on the upper cone surface and when the cone-sphere is properly aligned, the reflections seem to point directly toward the transmitting antenna. If the object is not properly aligned, the light reflections appear to point to one side of the transmitter and a 1/2 degree misalignment can be easily detected. The traversing equipment can also be used for alignment for any desired angle of incidence, including nose-on, to within about 1/4 degree. Usually the alignment in the horizontal plane is done roughly and quickly by the above visual method and then it is checked, and adjusted if need be, by the use of the traversing mechanism.

It should be pointed out that the mechanism is also capable of rotating the probe along circular trajectories lying in a horizontal plane. This has proven to be a useful capability when spheres are being measured. The sphere is placed near the vicinity of the vertical spin axis at the center of the chamber, as in Figure 4. The probe is then rotated all the way around the sphere and its distance from the sphere carefully noted at several points. These observations quickly show how the sphere must be moved to perfectly align it with the spin axis and the measurements may proceed.

After the test object is aligned the surface fields are probed along the desired trajectory, which usually lies in a horizontal plane. The probe signal is detected by the receiver and the measurements are made on a point-by-point basis. Some limited continuous recordings have been made, but there are severe problems associated with this kind of measurement, the worst of which is that of feeding position information to the recorder. It is easy to slave the recorder to the probe positioning mechanism by means of the transmitter selsyns but unfortunately the probe does not precisely follow the motion of the mechanism. This is because the probe lead is flexible and tends to whip, hence it leads or lags the mechanism moving it. In addition, the probe must touch the surface and the attendant friction causes the probe to lag by unpredictable and unstable amounts.

When the object has been completely probed to the satisfaction of the operator, it is removed and a conducting sphere of known size is installed in its place. The exact surface field distribution for the sphere is known, hence a measurement somewhere on the sphere serves to calibrate the test object measurements. For convenience, the very front of the sphere is probed where the fields attain their maximum intensity.

VII
CONCLUSIONS

In this report we have attempted to present some of the philosophy which influences the design of a surface field measurement facility. The factors which determine the dimensions and shape of the anechoic chamber have been discussed and some of the problems associated with construction and use of unbalanced shielded probes have been described. A description of the probe positioning device has been included which may be of use to the reader who seeks to fabricate a similar device. Measurement techniques which help reduce system errors have been described.

Future efforts in this field should be directed toward the study, design, and development of probes, for this has been a major problem area. The anechoic chamber housing a surface field facility presents no problem since adequate chambers are easily obtained. Likewise probe traversing systems can easily be constructed which perform better than that described in this report.

VIII

ACKNOWLEDGEMENTS

The author is indebted to the several persons who have, in one way or another, helped design, construct, and operate the surface field measurement facility. Thanks are due to Mr. V. Liepa, who made valuable suggestions regarding the facility design and measurement techniques; to Mr. S. Chang, who patiently constructed all the probes; to Mr. J. Lillie, who made the chamber evaluation tests; to Mr. K. Holmes, who fabricated the probe traversing equipment; and finally to the members of the operation team who cheerfully and conscientiously endured the data recording tedium: Messrs: R. Babcock, D. Brandenburg, E. Bublitz and R. Cheng.

IX

REFERENCES

1. Marsh, J.A., "Measured Current Distributions on Helical Antennas", Proc. IRE, Vol. 39, pp. 668-675, June 1951.

2. Chen, K.M. and V. Liepa, "The Minimization of the Back Scattering of a Cylinder by Central Loading", IEEE Trans. on Antennas and Propagation, Vol. AP-12, pp. 576-582, September 1964.

3. Private Communication, W.H. Emerson to R.E. Hiatt, 19 March 1963.

4. Knott, E.F., "Experimental Comparison of Tapered and Straight Anechoic Chambers", University of Michigan, Internal Radiation Laboratory Memorandum No. 02500-307-M, 23 September 1964.

5. Emerson, W.H., and F. P. Brownell, "Measurements of the Horn Shaped Bunker-Ramo Chamber", B.F. Goodrich Company Report No. MW-16, 2 August 1964.

6. King, D.D., "Measurements at Centimeter Wavelength", Van Nostrand Company, New York, p. 275, 1950.

7. Whiteside, H., "Electromagnetic Field Probes", Technical Report No. 377, Harvard University Cruft Lab., Cambridge, Massachusetts, May 1957.

8. Liepa, V.V., "A Source of Asymmetry in Surface Field Measurements", University of Michigan, Internal Radiation Laboratory Memorandum No. 7030-522-M, 4 August 1964.

DOCUMENT CONTROL DATA - R&D

(Security classification of title, body of abstract and indexing annotation must be entered when the overall report is classified)

1. ORIGINATING ACTIVITY *(Corporate author)* The University of Michigan Department of Electrical Engineering Radiation Laboratory	2a. REPORT SECURITY CLASSIFICATION UNCLASSIFIED 2b GROUP

3. REPORT TITLE

Design and Operation of a Surface Field Measurement Facility

4. DESCRIPTIVE NOTES *(Type of report and inclusive dates)*

Technical Report

5. AUTHOR(S) *(Last name, first name, initial)*

Knott, E. F.

6. REPORT DATE December 1965	7a. TOTAL NO. OF PAGES 49	7b. NO. OF REFS 8

8a. CONTRACT OR GRANT NO. AF 04(694)-683	9a. ORIGINATOR'S REPORT NUMBER(S) 7030-7-T
b. PROJECT NO	
c.	9b. OTHER REPORT NO(S) *(Any other numbers that may be assigned this report)*
d.	

10. AVAILABILITY/LIMITATION NOTICES

Qualified requestors may obtain copies of this report from Defense Documentation Center, Cameron Station, Alexandria, Virginia 22314

11. SUPPLEMENTARY NOTES	12. SPONSORING MILITARY ACTIVITY USAF Ballistic Systems Division Norton AFB, California 92409

13. ABSTRACT

The capability to measure surface fields induced upon scattering obstacles by an incident plane wave can be a very powerful diagnostic tool. A surface field measurement facility is comprized of four basic components: an anechoic chamber to provide a free space environment, a traversing mechanism to provide accurate probe positioning, the probe itself to sense the induced fields, and the necessary microwave instrumentation to permit the acquisition of data. All the components are required if meaningful measurements are to be made. The design and operation of a surface field measurement facility is described and some of the attendant problems are outlined. The investigation is part of the SURF program.

14. KEY WORDS	LINK A		LINK B		LINK C	
	ROLE	WT	ROLE	WT	ROLE	WT
experimental facility induced fields surface currents						

INSTRUCTIONS

1. ORIGINATING ACTIVITY: Enter the name and address of the contractor, subcontractor, grantee, Department of Defense activity or other organization *(corporate author)* issuing the report.

2*a*. REPORT SECURITY CLASSIFICATION: Enter the overall security classification of the report. Indicate whether "Restricted Data" is included. Marking is to be in accordance with appropriate security regulations.

2*b*. GROUP: Automatic downgrading is specified in DoD Directive 5200.10 and Armed Forces Industrial Manual. Enter the group number. Also, when applicable, show that optional markings have been used for Group 3 and Group 4 as authorized.

3. REPORT TITLE: Enter the complete report title in all capital letters. Titles in all cases should be unclassified. If a meaningful title cannot be selected without classification, show title classification in all capitals in parenthesis immediately following the title.

4. DESCRIPTIVE NOTES: If appropriate, enter the type of report, e.g., interim, progress, summary, annual, or final. Give the inclusive dates when a specific reporting period is covered.

5. AUTHOR(S): Enter the name(s) of author(s) as shown on or in the report. Enter last name, first name, middle initial. If military, show rank and branch of service. The name of the principal author is an absolute minimum requirement.

6. REPORT DATE: Enter the date of the report as day, month, year; or month, year. If more than one date appears on the report, use date of publication.

7*a*. TOTAL NUMBER OF PAGES: The total page count should follow normal pagination procedures, i.e., enter the number of pages containing information.

7*b*. NUMBER OF REFERENCES: Enter the total number of references cited in the report.

8*a*. CONTRACT OR GRANT NUMBER: If appropriate, enter the applicable number of the contract or grant under which the report was written.

8*b*, 8*c*, & 8*d*. PROJECT NUMBER: Enter the appropriate military department identification, such as project number, subproject number, system numbers, task number, etc.

9*a*. ORIGINATOR'S REPORT NUMBER(S): Enter the official report number by which the document will be identified and controlled by the originating activity. This number must be unique to this report.

9*b*. OTHER REPORT NUMBER(S): If the report has been assigned any other report numbers *(either by the originator or by the sponsor)*, also enter this number(s).

10. AVAILABILITY/LIMITATION NOTICES: Enter any limitations on further dissemination of the report, other than those imposed by security classification, using standard statements such as:

(1) "Qualified requesters may obtain copies of this report from DDC."

(2) "Foreign announcement and dissemination of this report by DDC is not authorized."

(3) "U. S. Government agencies may obtain copies of this report directly from DDC. Other qualified DDC users shall request through
_______________________________________."

(4) "U. S. military agencies may obtain copies of this report directly from DDC. Other qualified users shall request through
_______________________________________."

(5) "All distribution of this report is controlled. Qualified DDC users shall request through
_______________________________________."

If the report has been furnished to the Office of Technical Services, Department of Commerce, for sale to the public, indicate this fact and enter the price, if known.

11. SUPPLEMENTARY NOTES: Use for additional explanatory notes.

12. SPONSORING MILITARY ACTIVITY: Enter the name of the departmental project office or laboratory sponsoring *(paying for)* the research and development. Include address.

13. ABSTRACT: Enter an abstract giving a brief and factual summary of the document indicative of the report, even though it may also appear elsewhere in the body of the technical report. If additional space is required, a continuation sheet shall be attached.

It is highly desirable that the abstract of classified reports be unclassified. Each paragraph of the abstract shall end with an indication of the military security classification of the information in the paragraph, represented as *(TS)*, *(S)*, *(C)*, or *(U)*.

There is no limitation on the length of the abstract. However, the suggested length is from 150 to 225 words.

14. KEY WORDS: Key words are technically meaningful terms or short phrases that characterize a report and may be used as index entries for cataloging the report. Key words must be selected so that no security classification is required. Identifiers, such as equipment model designation, trade name, military project code name, geographic location, may be used as key words but will be followed by an indication of technical context. The assignment of links, rules, and weights is optional.