ENGINEERING RESEARCH INSTITUTE
UNIVERSITY OF MICHIGAN
ANN ARBOR

TECHNICAL REPORT NO. 1

FUNDAMENTAL EXPERIMENTS IN PLASTICITY INSTRUMENTATION AND PRELIMINARY PHASES

BY

P. M. NAGHDI
Assistant Professor of Engineering Mechanics

J. C. ROWLEY
Research Assistant, Engineering Research Institute

Project 2027

OFFICE OF ORDNANCE RESEARCH, U. S. ARMY
CONTRACT DA-20-018-ORD 12099

September, 1952

ABSTRACT

The present report covers the preliminary phases of research on some fundamental experiments in plasticity with reference to stress-strain relations. The emphasis of the work to date has been on the practical phases of the investigation; and therefore the experimental equipment and its associated instrumentation, together with the details of their operation, are discussed. The specimens (24S-T4 aluminum) used in this investigation are described, and a study of isotropy and grain size associated with them is presented. A brief description of the preliminary test results is given, and finally the accuracy attainable with the test setup and end-effects are discussed.

FUNDAMENTAL EXPERIMENTS IN PLASTICITY INSTRUMENTATION AND PRELIMINARY PHASES

1. INTRODUCTION

The lack of significant and accurate experiments has considerably hampered both the theoretical and practical aspects of research into the plasitc behavior of materials. Three basic requisites for the effective experimental investigation of plastic behavior are as follows:

(i). Provision for a loading program over a wide range of combined stresses.

(ii). Provision for accurate and reliable measurements of large plastic deformations.

(iii). Provision for the study and control of time effects (e.g., loading rate, creep, relaxation, etc.).

Experimental investigations in plasticity to date have usually failed to include at least one of the above factors in their programs of research. This research has sought to emphasize the necessity of significant experiments in plasticity and has therefore incorporated these three important factors into the study as fully as possible.

The state of combined stress in these investigations is applied by a special combined tension-torsion machine* which is discussed in section 2-a. The plastic strains are measured by means of an extensometer, whose description and operation are presented in Section 2-b. Efforts have been made, by providing several sensitivities in the recording circuits, to have this extensometer measure elastic as well as large plastic strains. The effect of time and time rates has been included in the investigation through the variable loading rates available with the tension-torsion machine, and

---

*The design of the machine was directed by Dr. Paul F. Chenea, formerly of the University of Michigan. The engineering and fabrication were carried out by Vibration Systems, Inc., of Detroit, Michigan.

through the use of continuous recording of all test variables (Section 2-d). A brief discussion of the thin tube specimens used in this study, preliminary tests results, grain size, material anisotropy, and end-effect are also presented.

2. EXPERIMENTAL EQUIPMENT

a. The Combined Tension-Torsion Machine

The combined tension-torsion machine used in this investigation (pictured in Figs. 1 and 2) is capable of applying in combination or independently a tensile load up to 10,000 lbs and a torque up to 10,000-inch lbs maxima. Variable loading rates are available from 0 to approximately 0.1 inch per hour for extension and from 0 to 1/2 rev per min in twist. The loading is accomplished by means of electric motors working through two Graham Variable-Speed Transmissions and appropriate gearing.

An interesting feature of the tension-torsion machine is that Dillon dynamometers are utilized to indicate the load. The dynamometer scales may, of course, be read directly for rough values, but for accurate readings SR-4 strain-gage bridges have been attached to the beams of the dynamometers. These bridges provide means for electrical recording and accurate calibration of loads with proving rings or load cells. Through precise calibration and electrical recording, it is possible to attain values of loads and their increments with an accuracy of better than 1 per cent.

b. The Extensometer

The construction and operation of the extensometer is indicated by the photographs in Fig. 3 and the schematic sketch in Fig. 4. Basically the extensometer utilizes the outputs from the displacements of linear potentiometers to measure the plastic deformations.

Two discs D (Fig. 4) are clamped to the specimen by means of spring-loaded studs M. The force produced by these studs on the specimen is approximately 8 lbs per stud. An accurately known gage length of 2-5/8 inches is established by gage clamps (see Fig. 3), which clamp the two discs together as the extensometer is attached to the specimen. After the mounting studs are tightened, the gage clamps are removed. The deformations of the specimen over the 2-5/8-inch gage length are measured as the relative displacements of the two discs.

The axial strain is measured by the relative axial displacements of the discs as indicated on the rectilinear potentiometers P_1. These

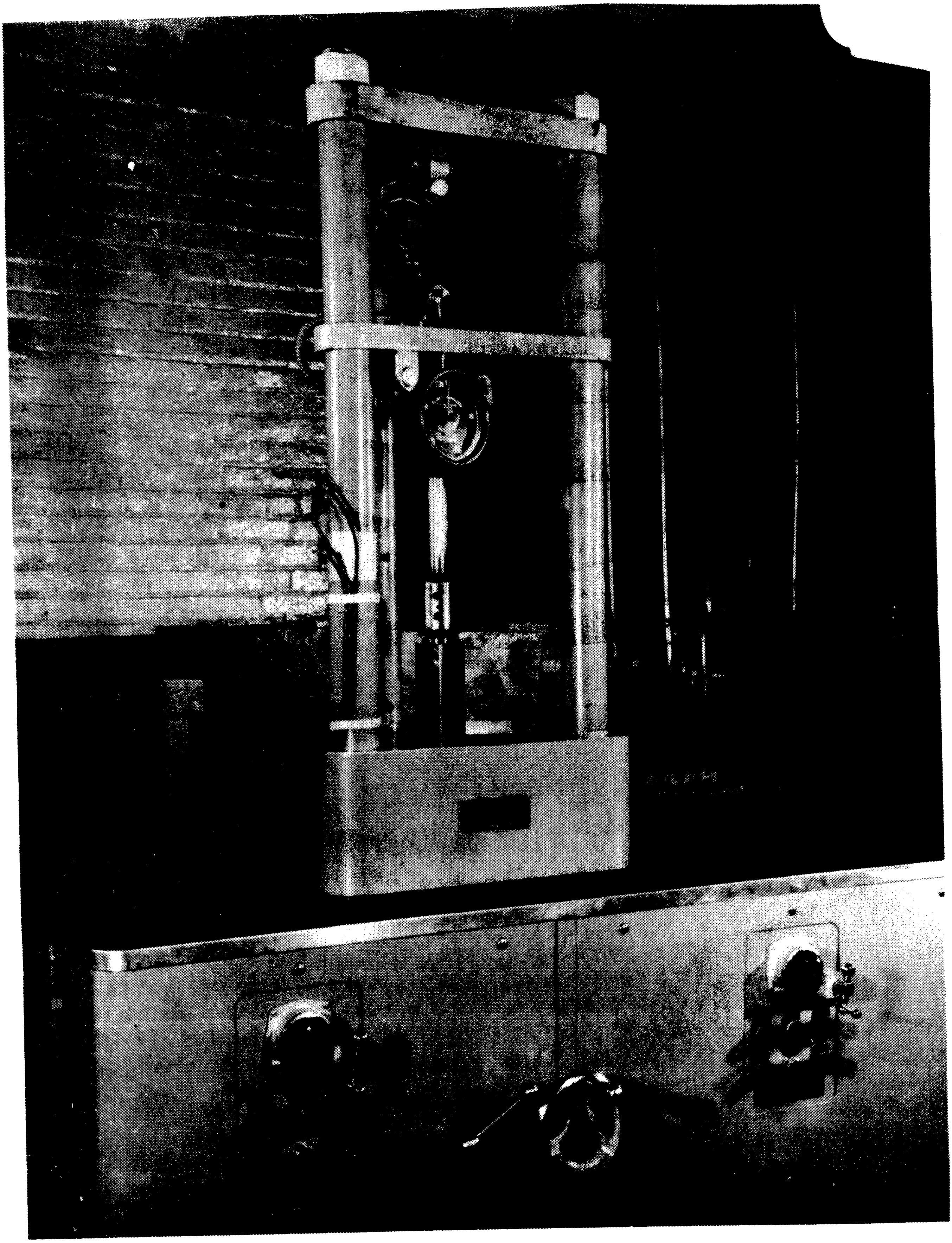

Fig. 1
Combined Tension-Torsion Machine, Showing Controls and Specimen Area

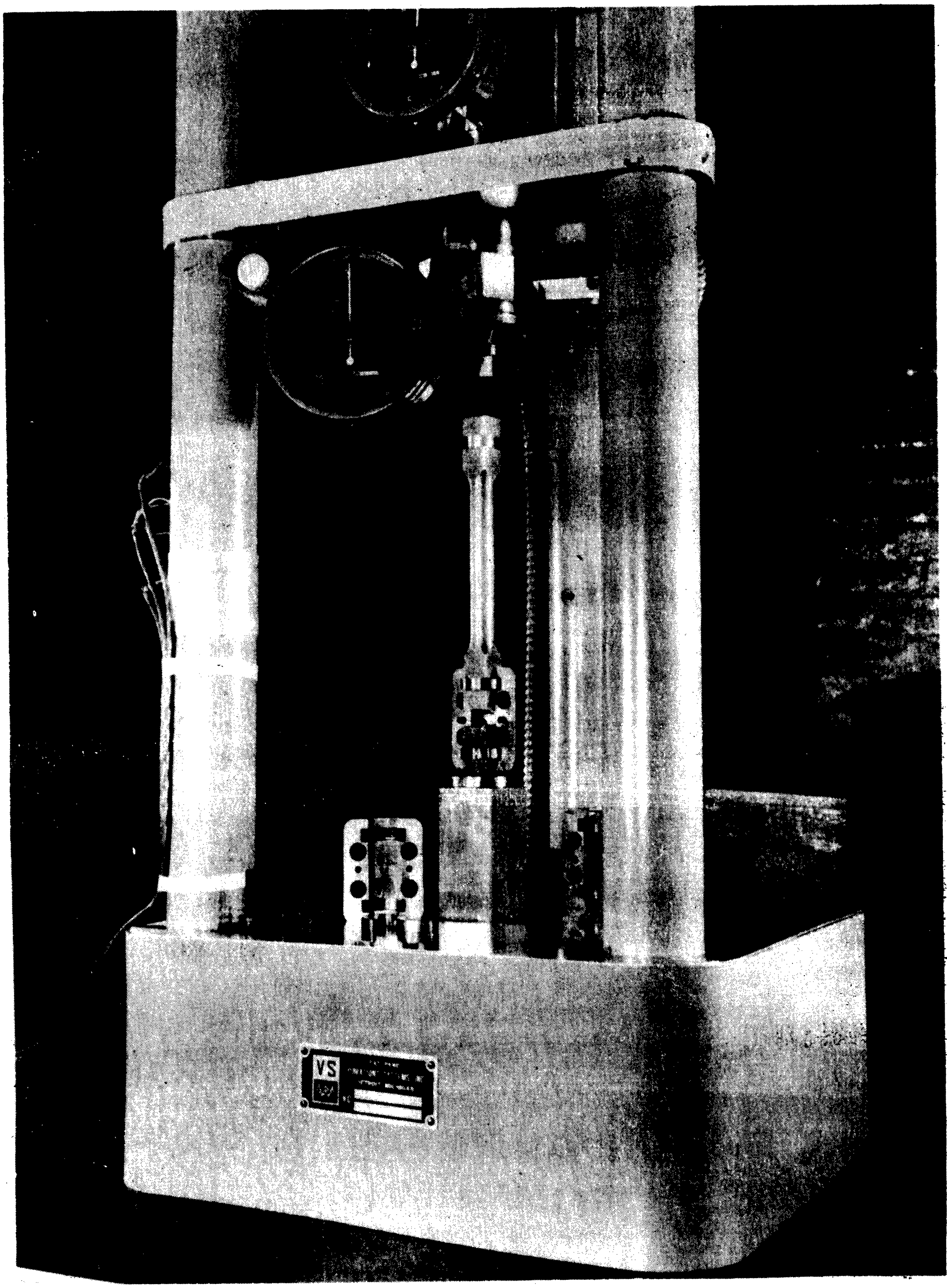

Fig. 2
Details of Specimen Area, Showing Chuck Arrangement

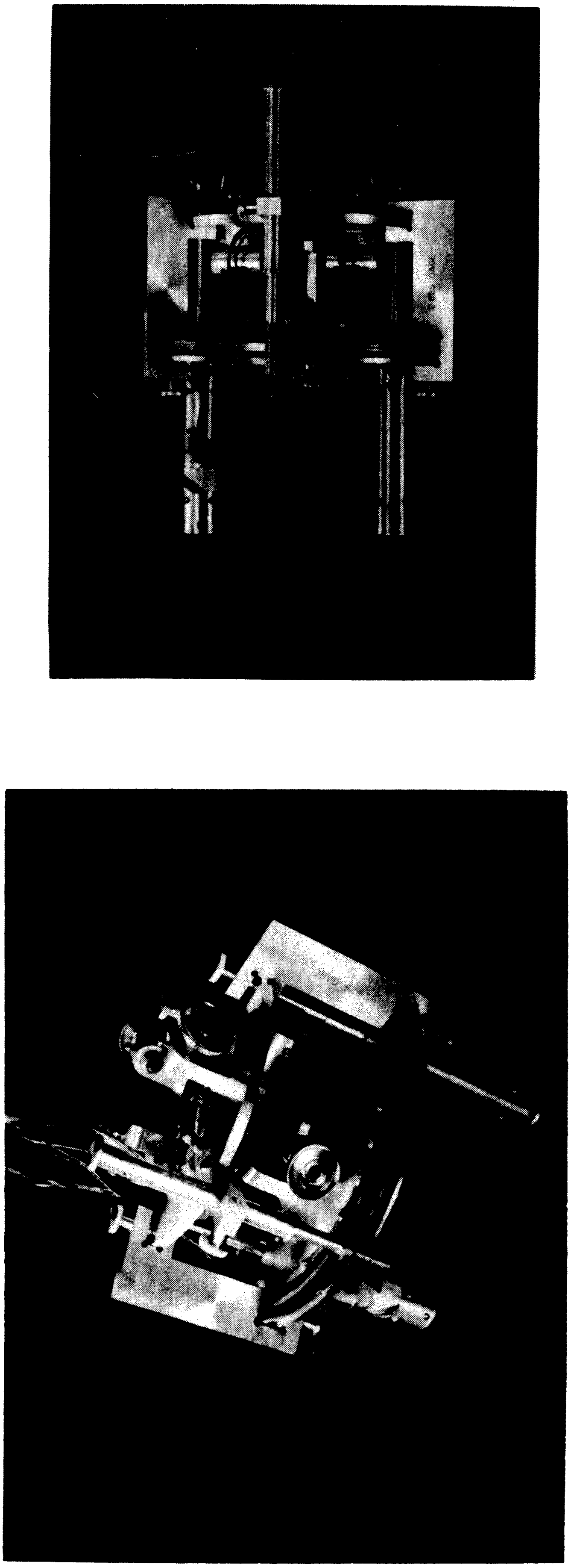

Fig. 3
Two Views of The Extensometer.

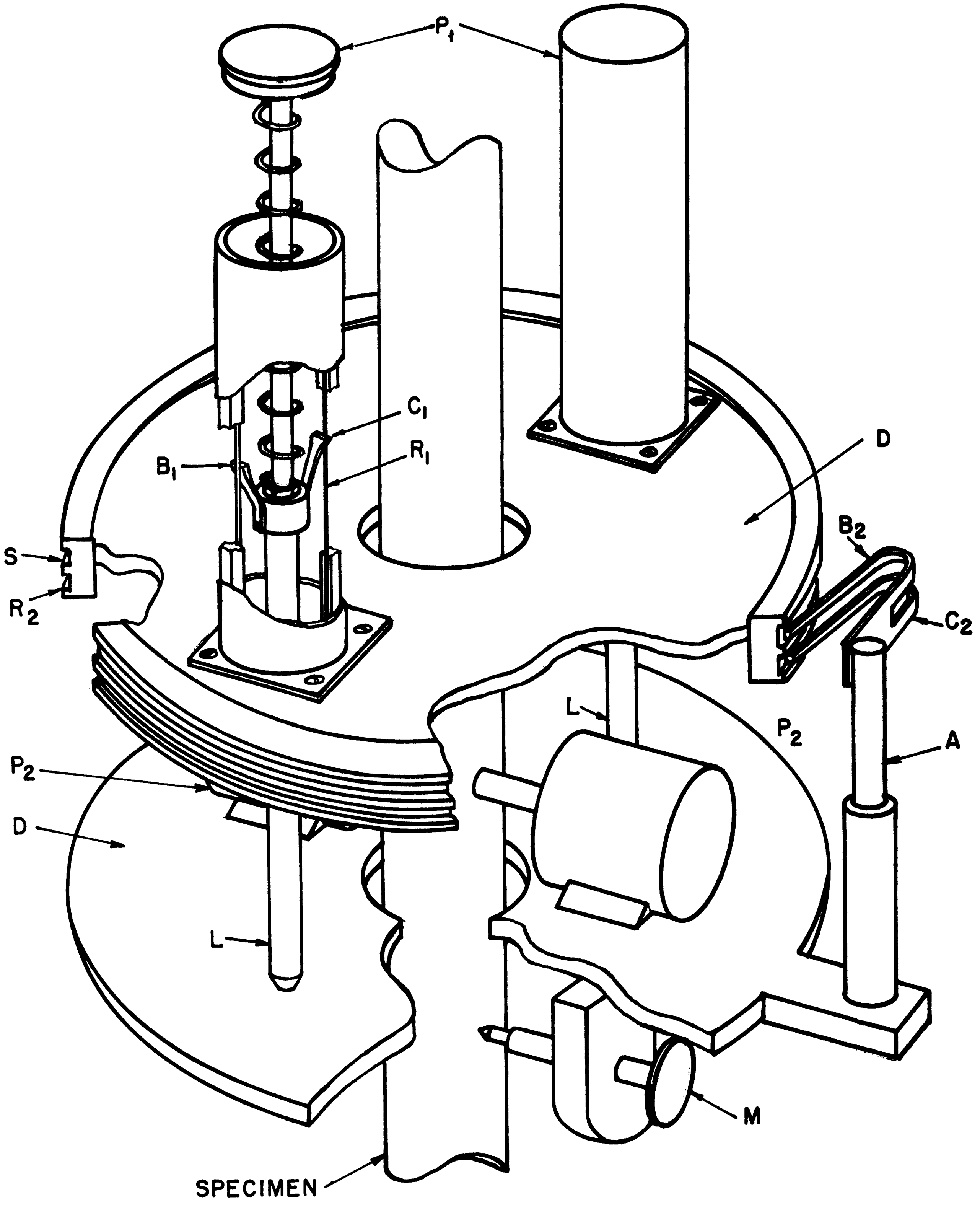

FIG. 4. SCHEMATIC SKETCH
OF THE EXTENSOMETER

potentiometers are single resistance wires R_1 traversed by a sliding contact C_1. This slider is attached to a spring-loaded leg L, which is free to move vertically and free to slide over the lower disc. The change in resistance is brought out through the sliding brush B_1. Small accidential nonparallelisms of the discs or possible slight irregularities in the resistance wires are compensated for by using the two rectilinear potentiometers in parallel.

The angle of twist, or relative rotation of the two discs, is measured by means of arm A fixed to the lower disc but free to move vertically. The arm has a contact C_2 at its upper end which slides over the resistance wire R_2, that is wound on an insulating ring around the periphery of the upper disc. The signal is brought out by the brush B_2 through the slip ring S, which is wound co-axially with R_2 on the insulating ring.

Changes in diameter of a specimen are recorded by means of two small plunger-type helically wound potentiometers P_2, which are attached to the bottom disc diametrically opposite each other. The plunger shafts of the potentiometers are held in contact with the specimen by spring loading. The contact and brush arrangement is quite similar to the two cases discribed above. These potentiometers are also used in parallel to average out small eccentricities caused by the unavoidable slight decentering which occurs when the extensometer is attached to the specimen.

The majority of the components of the extensometer were made of aluminum to keep the weight to a minimum. Consequently, the extensometer weighs slightly less than 3-1/2 lbs.

c. Calibration of the Extensometer

Calibration of the various elements of the extensometer is performed by mounting it on a calibration stand constructed for this purpose (Fig. 5). This calibrator simulates the deformations of a specimen; that is, known angles and axial displacements may be given to the extensometer independently. The extensometer is mounted on the calibrator in exactly the same manner as on a specimen; however, the two discs are attached to different elements. These two elements are made so that they may be rotated and/or translated with respect to one another. A Federal 1/10,000-inch dial indicator measures axial displacements, and standard-angles sets viewed through a telescope-scale arrangement provide the means to give the extensometer known rotations.

The procedure for calibrating the axial extension is as follows: The two discs of the extensometer are given a known set of incremental displacements as read from the dial indicator. These increments are recorded on the oscillograph (described below), and a calibration curve of axial extension (or strain directly, if the gage length is introduced) may be plotted against deflection of the oscillograph trace. The calibration of the angle of twist is essentially the same; however, the details for the use of the standard-angle sets require further description.

The standard-angle sets are two small mirrors attached firmly to a base. The angle between the mirrors is determined accurately on a divided table. The angle set is then placed on the lower portion of the calibrator, which rotates with the lower disc (Fig. 5). Using a telescope, a scale is read by reflection from one of the mirrors. The calibrator is then rotated until the same scale reading is seen through the telescope by reflection from the other mirror. In this manner the known angle of the standard-angle set is turned through by the extensometer, and a calibration curve may be drawn from the oscillograph trace in the same way as described for the calibration of the axial extension.

The helical potentiometers measuring the change in diameter of a specimen are calibrated merely by placing shims of known thickness between the plungers and the center shaft of the calibrator. Again a calibration curve may be plotted.

d. Recording Equipment and Circuitry

The recording of both loads and deformations is done with a Hathaway (Model S-14A) oscillograph. This six-channel instrument utilizes a film 6 inches wide. The film speed has been reduced to about 1/4 inch per second to accommodate the relatively slow speeds of the current testing program. This instrument has been fitted with a time-ordinate marker showing 5-second intervals.

The recording of the loads in both tension and torsion is accomplished by using the output of SR-4 strain-gage bridges which are mounted on the beams of the load dynamometers. The details of the mounting of the bridges and the accompanying circuitry is shown in Fig. 6. The output of the bridges is applied directly to the galvanometers of the oscillograph. The output of the SR-4 bridges is linear with load and therefore affords a convenient means of calibration with a load cell or proving ring.

The circuits for the three elements of the extensometer are quite similar, so only those for the recording of angle of twist will be discussed in detail. Two general types of circuits have been used in this connection, a low-sensitivity voltmeter-type circuit and a high-sensitivity bridge-type circuit. These are shown in Fig. 7. The voltmeter-type circuit is provided with a low- and high-sensitivity switch. The high-sensitivity position is used to expand the elastic and initial part of the work-hardening range to full scale (full deflection on the oscillograph film). The lower sensitivity is then switched in and the remaining portion of work-hardening

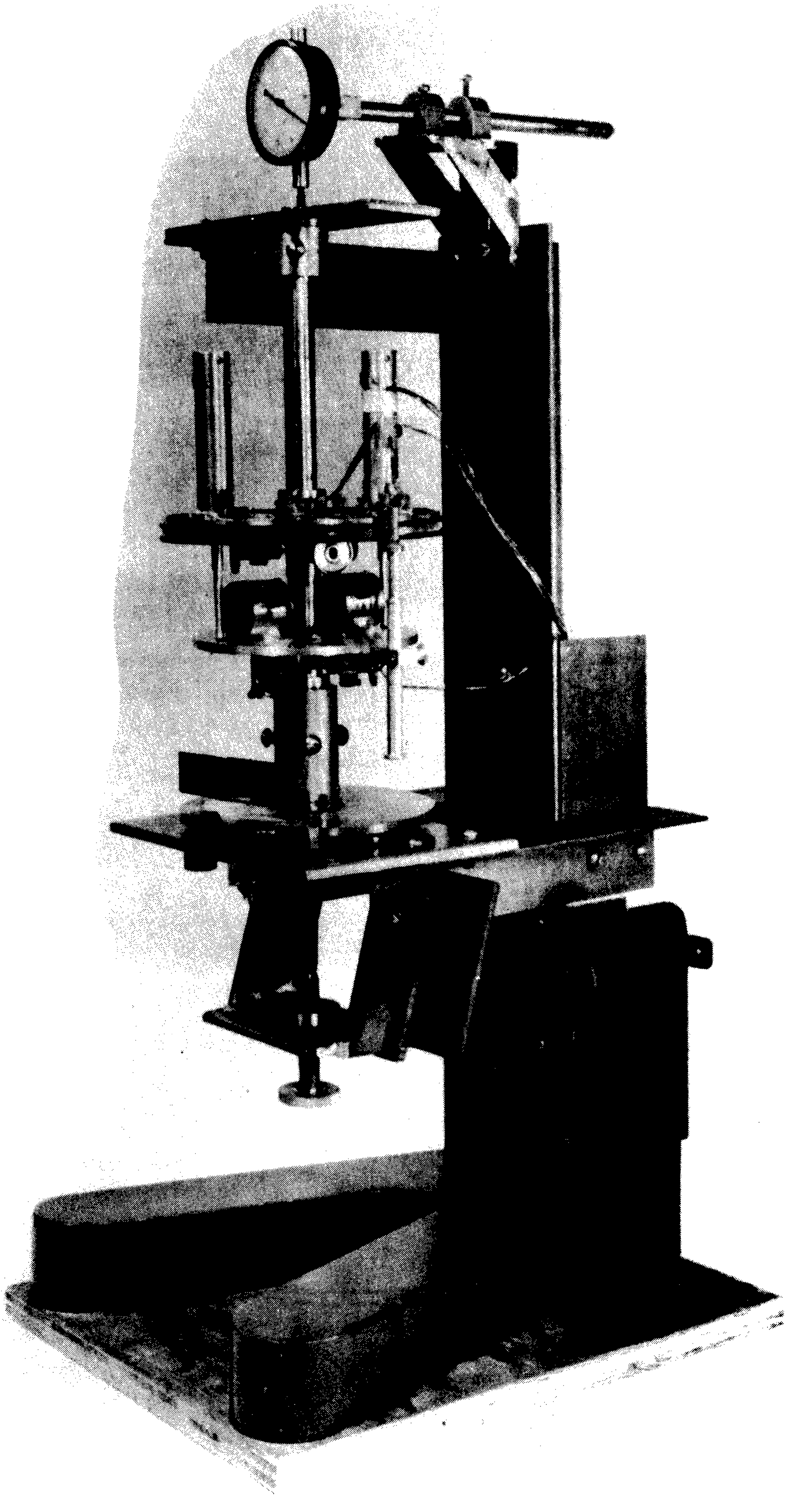

Fig. 5
Calibration Stand Showing the Extensometer,
Standard-Angle Set, and 1/10,000-inch Dial Gage.

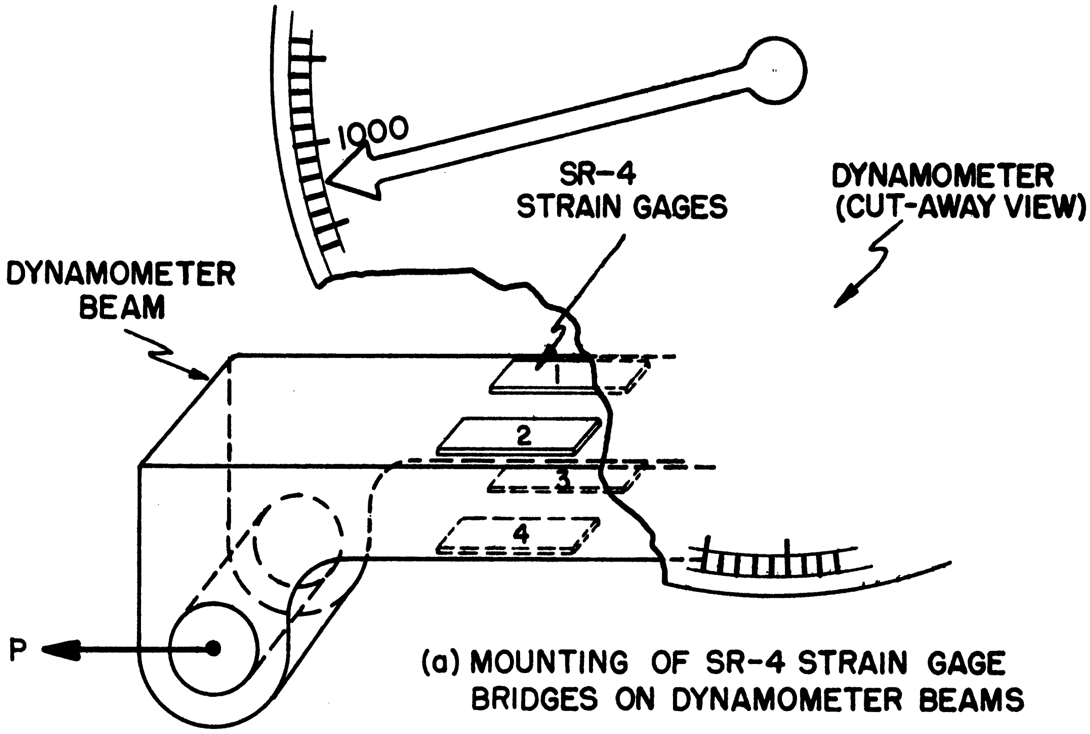

(a) MOUNTING OF SR-4 STRAIN GAGE BRIDGES ON DYNAMOMETER BEAMS

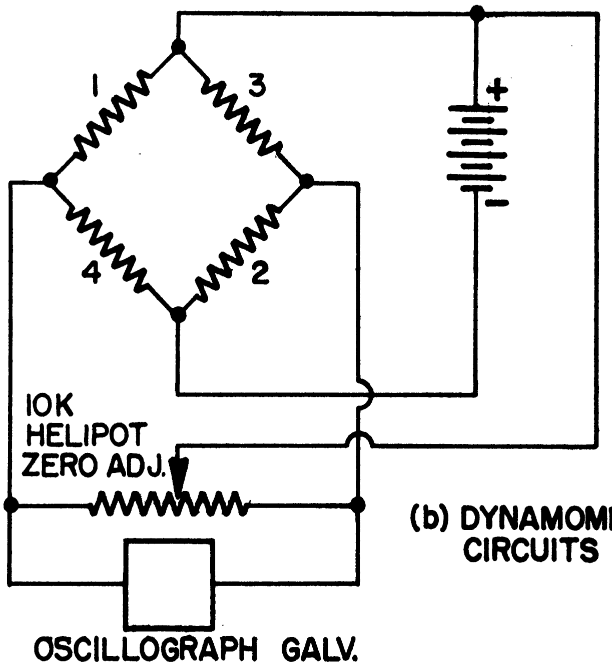

(b) DYNAMOMETER BRIDGE CIRCUITS

FIG. 6. THE DYNAMOMETER SR-4 BRIDGE MOUNTING AND ASSOCIATED CIRCUITRY

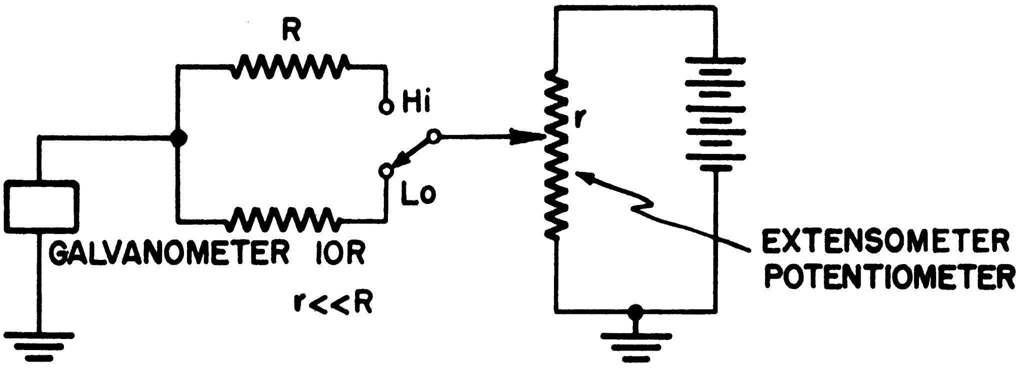

7(a)
LOW-SENSITIVITY CIRCUIT

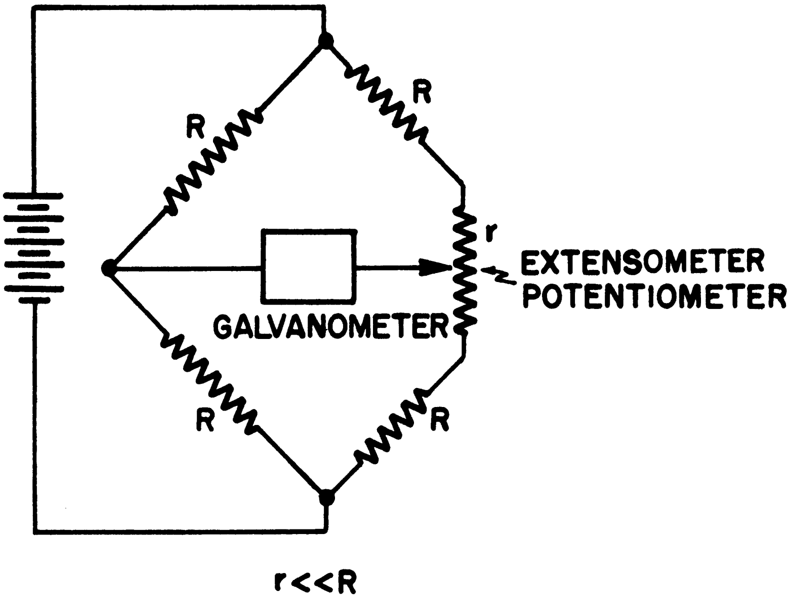

7(b)
HIGH-SENSITIVITY CIRCUIT

FIG. 7
EXTENSOMETER RECORDING CIRCUITS

range is extended to full scale. The highly sensitive bridge circuit is used when very small increments of deformation are expected. Such small increments may occur in the case of a variable loading path, where the deformation due to one type of loading (twist) is abruptly followed by another (tension). A critical evaluation of test data under these conditions is of prime importance in the comparison of theories of plasticity.

Calibration of the circuits shown in Fig. 7 is accomplished on the calibrator, as described in Section 2 above. Two factors have dictated a modification and improvement of this calibration. It was desirable to have a calibration procedure that would be independent of the full-scale adjustment and at the same time could be applied more rapidly and conveniently. The circuit whereby this more versatile calibration is accomplished is indicated by the sketch in Fig. 8. A calibrating circuit, composed of a series of fixed resistors, is placed in parallel with the indicating circuit, the full-scale adjustment being in series with this parallel combination. Then for a particular full-scale setting, the relation between the output of the calibrating resistors and the indicator circuit (e.g., in the form of known increments from the standard-angle sets) is recorded on the same oscillograph record. Thus, the equivalent values of the calibrating resistors in angular measure are conveniently obtained. It is then necessary merely to switch the calibrating resistors across the recording circuit successively. Such a system need be recalibrated only periodically to check the stability of the circuit components.

3. THIN-WALLED SPECIMENS

Specimens in the form of thin-walled tubes were chosen for the initial testing program. The design of these specimens was governed by the following factors:

(i). The available loading range of the tension-torsion machine.

(ii). The dimensions of the extensometer.

(iii). The conditions for elastic and plastic buckling in torsion.

(iv). The considerations of end effects.

An aluminum alloy 24S-T4 was selected as a suitable material for the present investigation. Using the nominal mechanical proporties of this alloy and the factors listed above, the thin-walled specimens were designed with the dimensions shown in the drawing of Fig. 9.

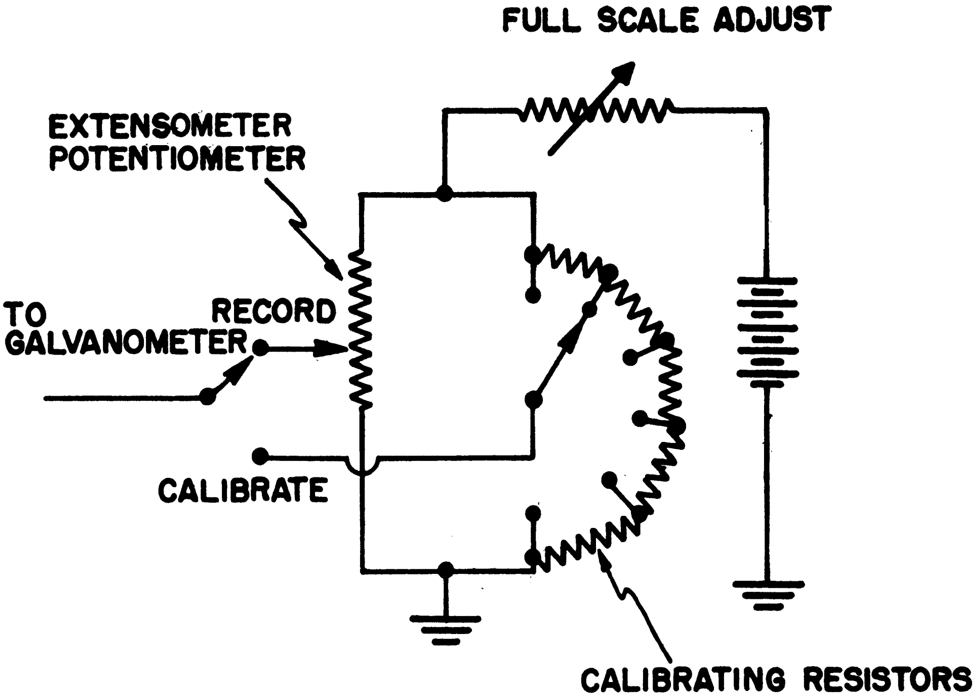

FIG. 8
CALIBRATING CIRCUIT

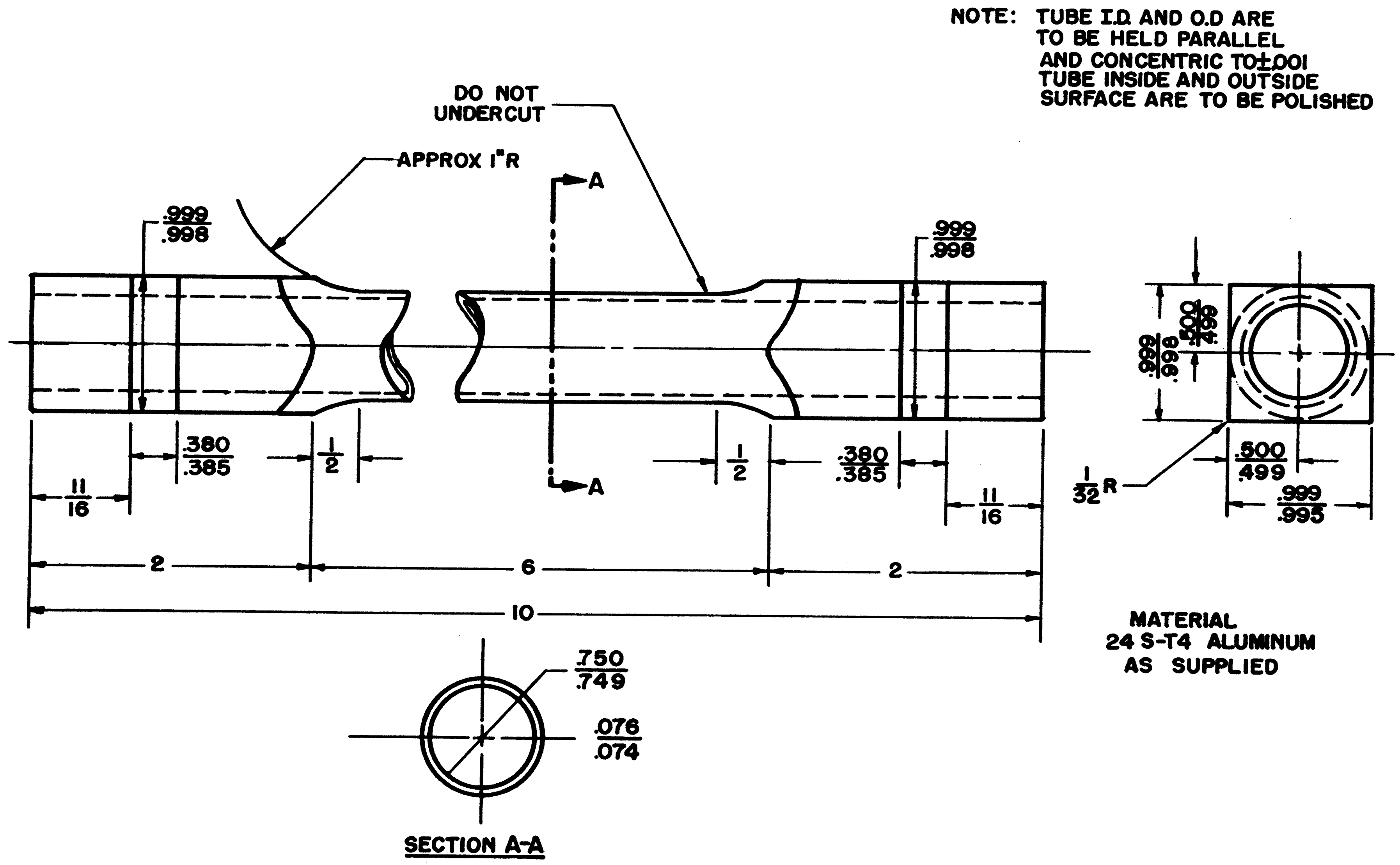

FIG. 9. DRAWING OF THIN-WALLED SPECIMEN

A fabrication procedure was evolved which produces satisfactory specimens, well within the tolerances indicated in Fig. 9. This procedure is brifely as follows:

(i). The specimens blanks are rough-cut from the stock in the form of square bars.

(ii). The ends of the bars are center-drilled and the central portion of the bars turned on centers to within about .01 inch of the final outside diameter.

(iii). With the central portion of the bars in a 3-jawed chuck, the bore is drilled slightly under size; carefully avoiding overheating.

(iv). The bore is then reamed to size, again carefully avoiding overheating.

(v). The specimen is next placed on a hardened arbor of very slight taper, and the outside surface is finish-turned on centers.

(vi). With the arbor still in place, the specimen is set up on centers in an end mill and the square ends finished.

The need for checking tolerances and measuring the wall thickness of the tubes necessitated the construction of a special measuring instrument. This instrument, whose schematic diagram is shown in Fig. 10, utilizes both an optical and a mechanical lever. This instrument has proven to be sufficiently accurate for measuring wall thickness, giving a reproducibility of better than ± 0.00005 inch. The instrument is calibrated against a set of hardened-steel standard thickness, which were in turn calibrated against gage blocks. Fig. 11 shows typical wall-thickness profiles of a specimen.

4. ISOTROPY AND GRAIN SIZE

The specimens were cut from the center of 2-inch thick plates, with the direction of roll along the length of the tube. The specimens were taken from the center of the plates to minimize the effect of the material anisotropy due to rolling. To indicate qualitatively the extent of this anisotropy and also to determine the approximate grain size, metallographic studies were made of small samples cut from the same stock plates from which the specimens were made. The orientation of these samples as well as the blanks for the tubular specimens is shown in Fig. 12.

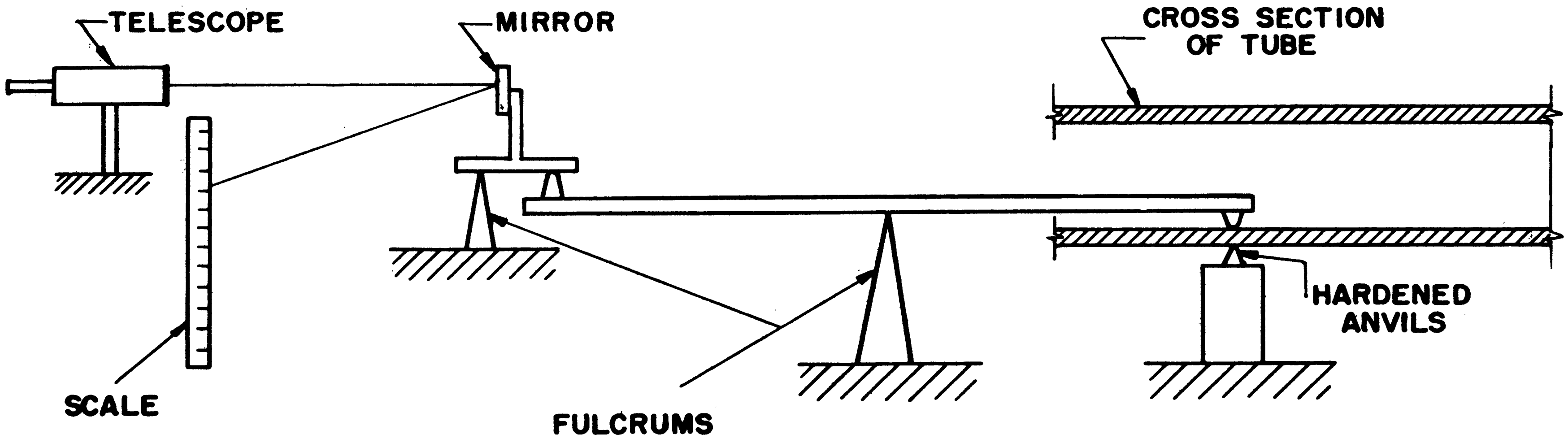

FIG. 10. A SCHEMATIC DIAGRAM OF THE SPECIMEN WALL-THICKNESS MEASURING—INSTRUMENT.

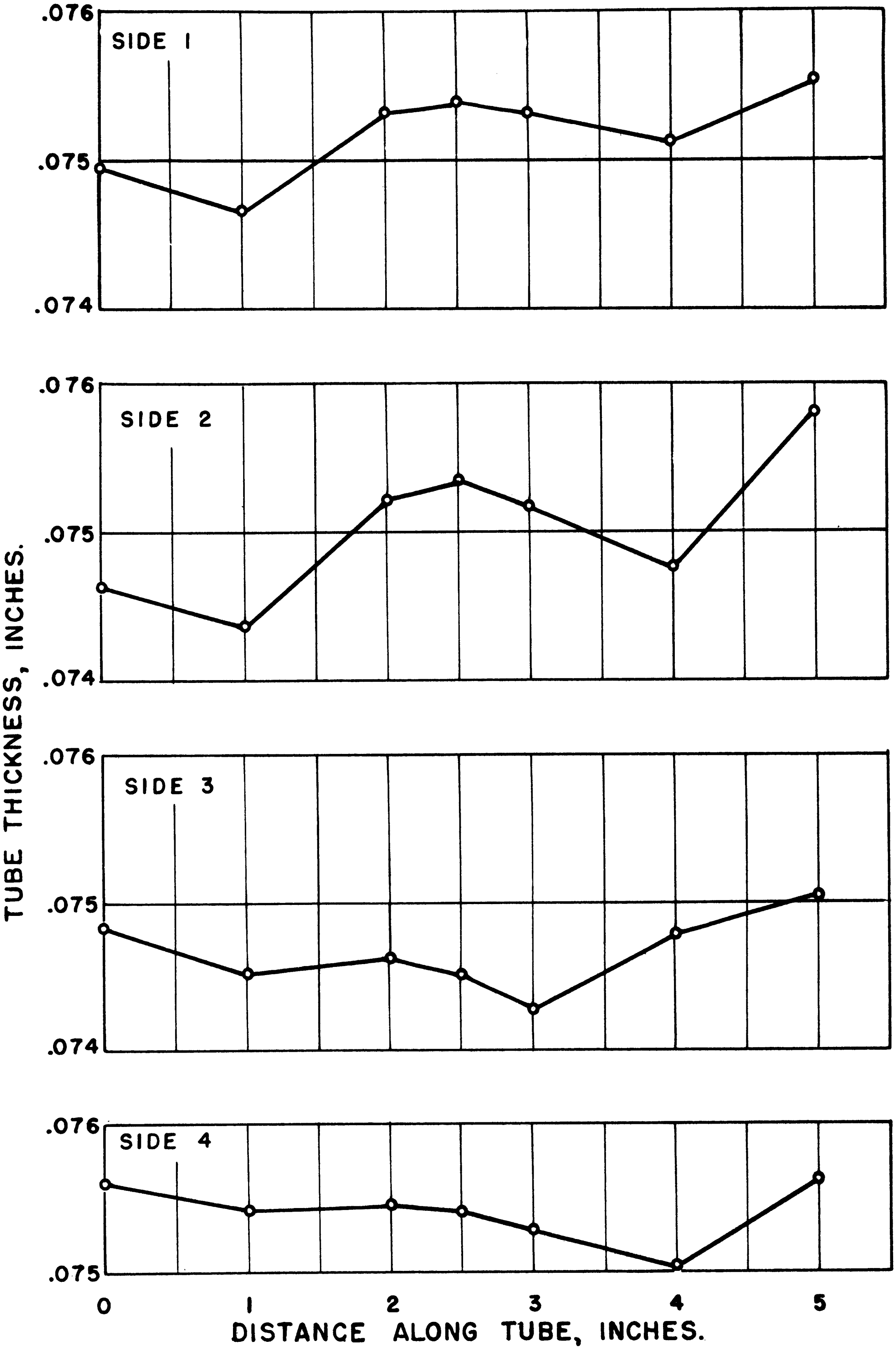

FIG. 11. TUBE THICKNESS PROFILES.

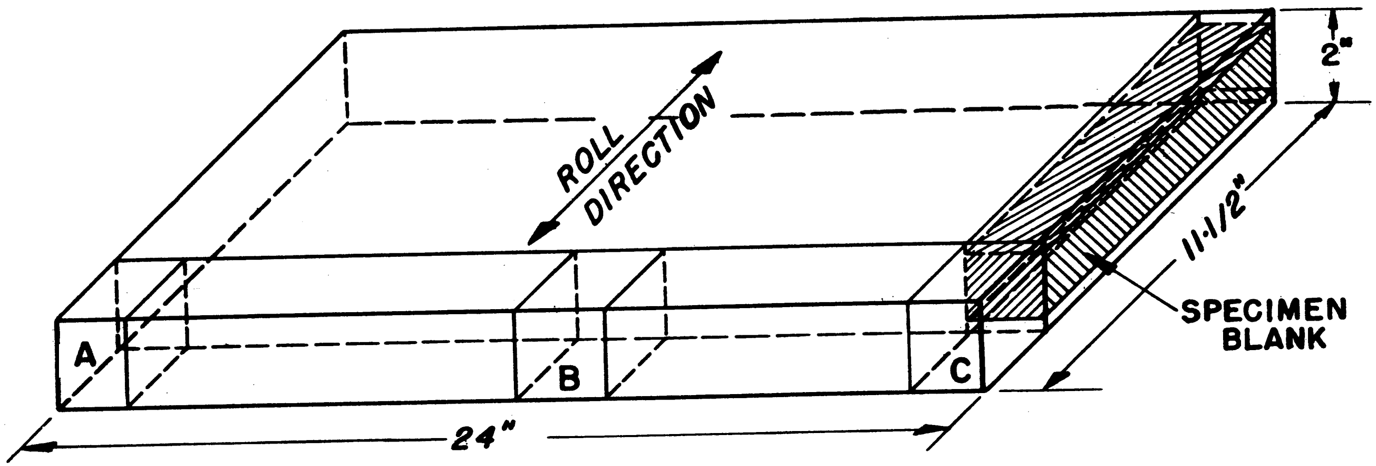

FIG. 12. ALUMINUM ALLOY PLATE STOCK, SHOWING TYPICAL CUTTING OF SPECIMEN BLANKS AND METALLOGRAPHIC SAMPLES A, B, C.

Representative photomicrographs of one of these studies are presented in Fig. 13. The differences between the grain structure and size along (Fig. 13a) and transverse (Fig. 13b) to the roll direction is apparent. The grains have been elongated in the direction of rolling and flattened between the rolls as could be anticipated. The photomicrograph transverse to the roll direction shows the edges of these elongated grains, and the other view the flattened ends.

Clearly there is appreciable anisotropy present, as evidenced by the metallographic studies. To obtain quantitative data on the effect of thdis anisotropy, solid tension and torsion specimens were cut transverse and parallel to the roll direction. The results of the tests on these specimens are presented and discussed in Section 5.

From the photomicrographs in Fig. 13 it can be determined that the average grain size is roughly 500 grains per inch. Hence, there will be approximately 40 grains across the 0.075-inch tube wall. This number of grains is believed to be sufficient for the specimen's behavior to be considered as polycrystalline.

5. PRELIMINARY EXPERIMENTAL RESULTS

The following preliminary tests have been completed:

(i). Four solid tension specimens, two parallel and two transverse to the roll direction.

(ii). Four solid torsion specimens, two parallel and two transverse to roll direction.

(iii). An end-effect investigation.

The complete data for these tests will be included in a subsequent report, and only the significant results will be discussed here.

The motivation for conducting tests (i) and (ii) was to obtain the elastic constants of the aluminum alloy, as well as to evaluate the anisotropy of the rolled plate (see Section 4). The results of these two [illegible] tests are representatively displayed in the curves for the torsion specimens given in Figs. 14 and 15. To evaluate the elastic constants of the material, strain gages as well as the extensometer were used. This arrangement had the added advantage of allowing a comparison to be made between the behavior of the extensometer and the strain gage in the elastic and initial work-hardening range. The agreement between the two is remarkable, as indicated in

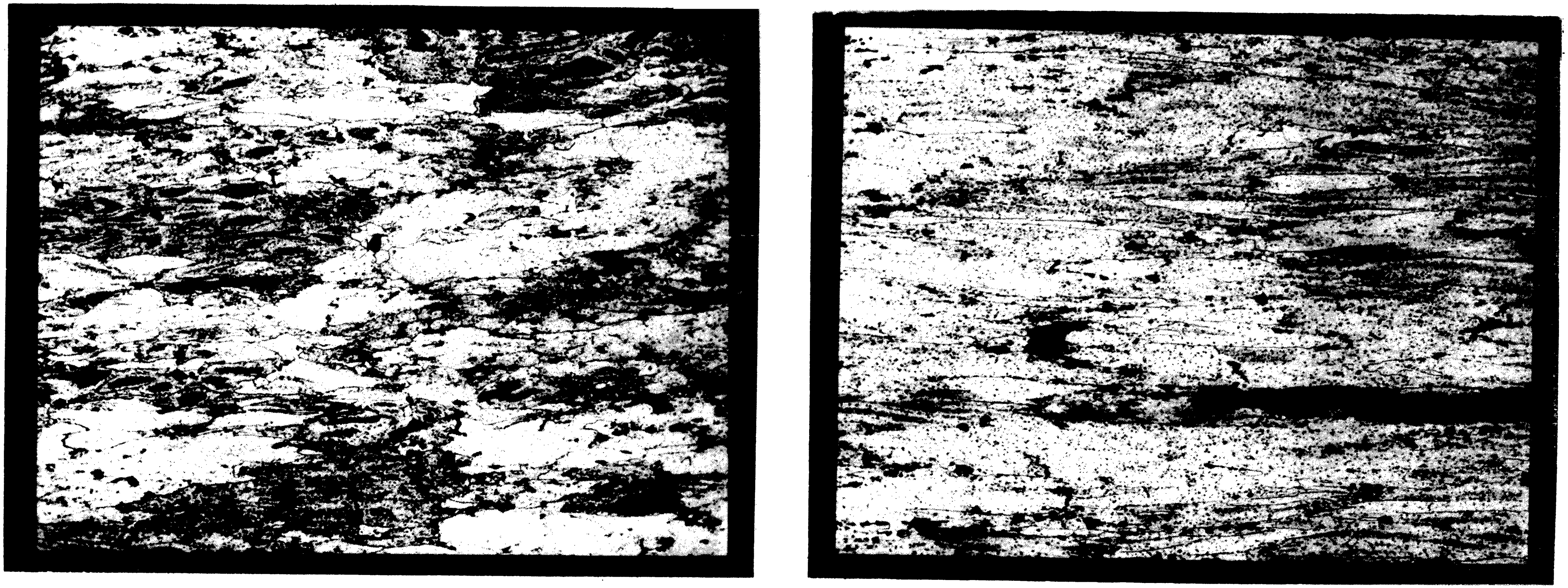

(a) Along roll direction, 100X.

(b) Transverse to roll direction, 100X.

Fig. 13. Photomicrographs for Sample C. Preparation of sample: (i). Mechanical polish on 2/0 alumina wheel. (ii). Electropolish. (iii). Etched 1HF, 1-1/2HCL, 2-1/2HNO_3, 95H_2O.

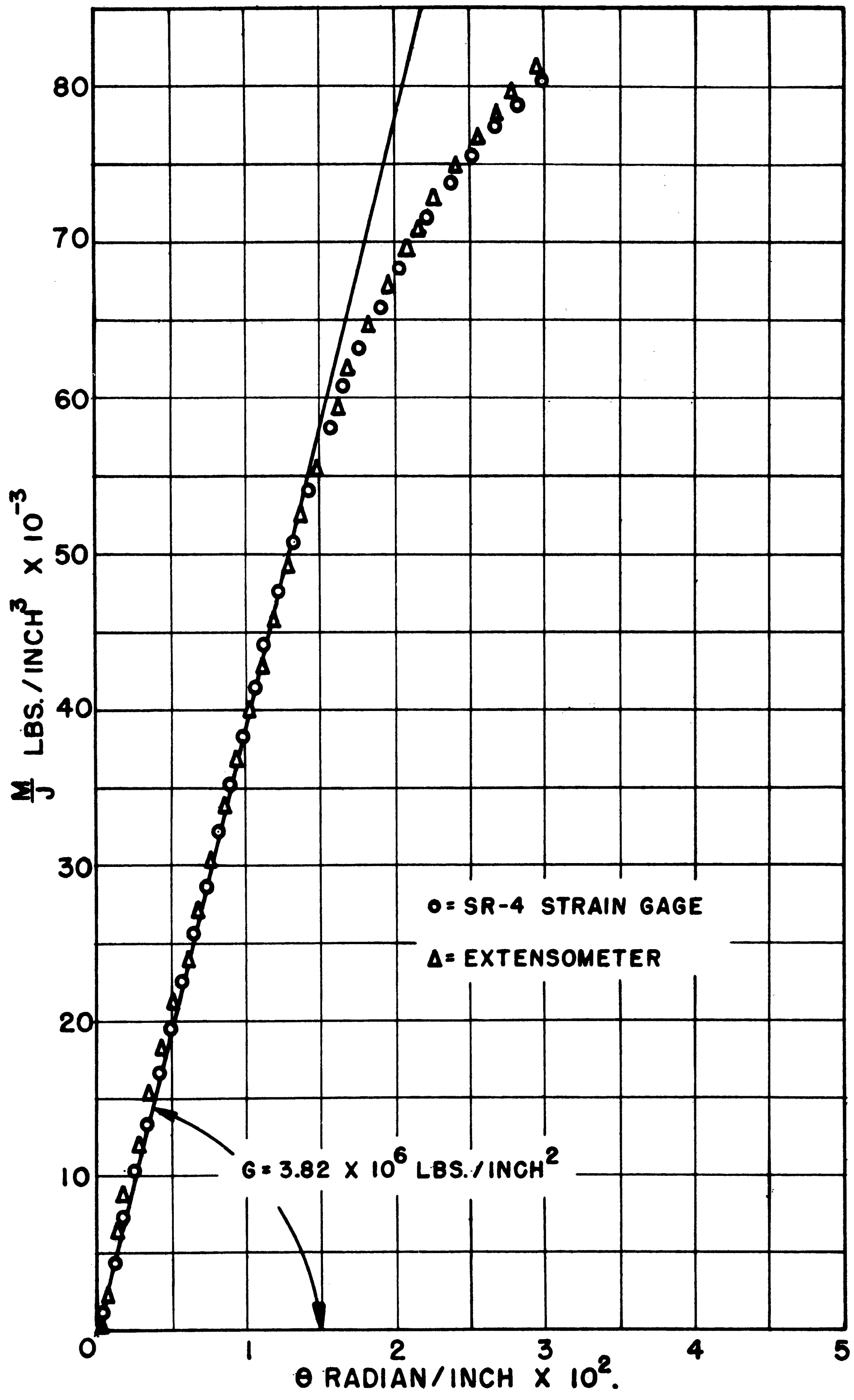

FIG. 14. ELASTIC RANGE FOR SOLID TORSION SPECIMENS
(J BASED ON ORIGINAL DIAMETER).

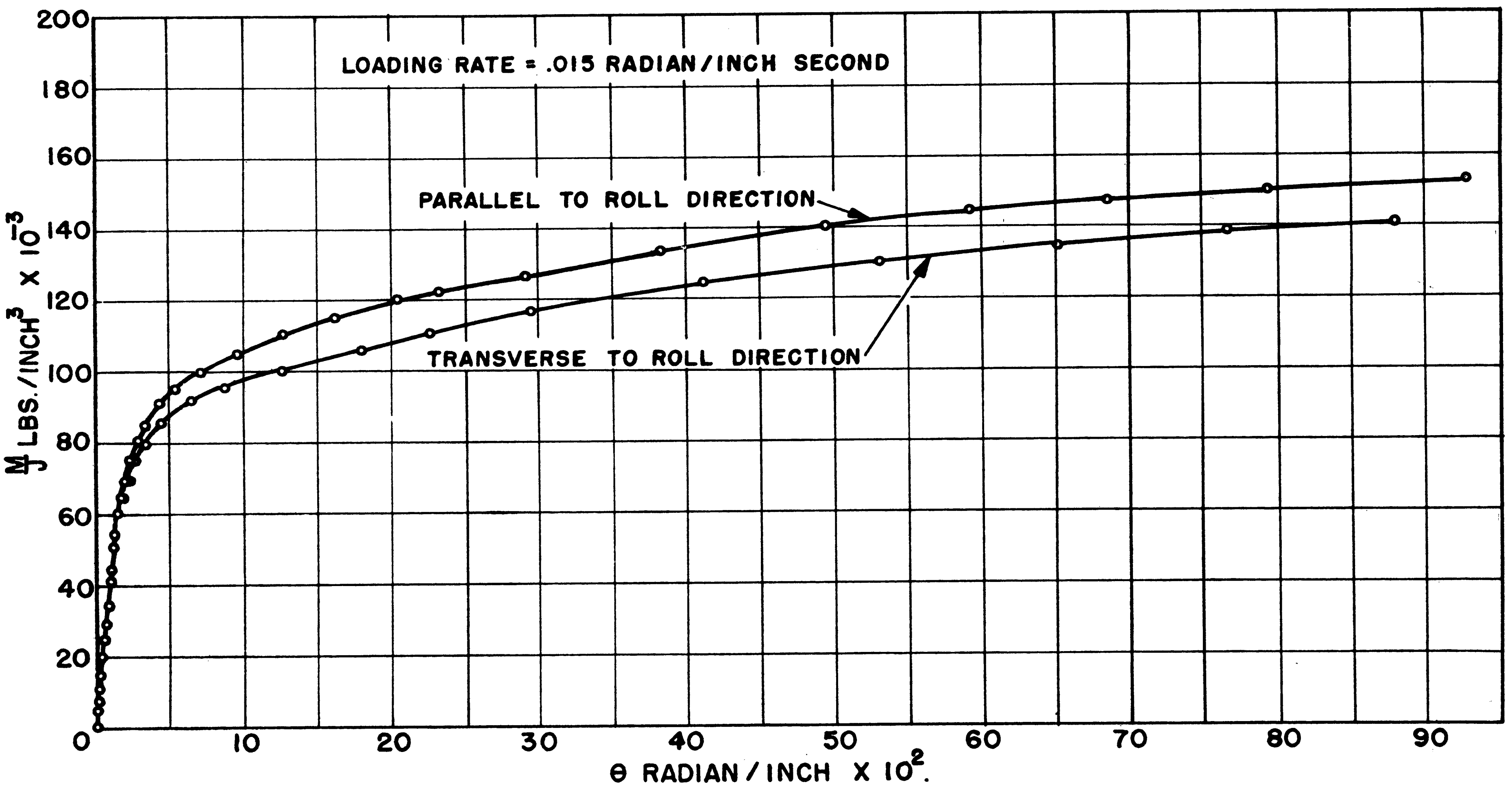

FIG. 15. PLASTIC RANGE FOR SOLID TORSION SPECIMENS (J BASED ON ORIGINAL DIAMETER).

Fig. 14, and is surprising in view of the fact that the extensometer was designed for the measurement of large plastic strains.

The effect of the anisotropy is to displace the work-hardening range of the curve for the transverse direction about 10 per cent below that for the parallel direction, and also to alter slightly the character of the "knee" of the curve as shown in Fig. 15. Although the anisotroy effect is quite appreciable, as might have been anticipated, any effort to include anisotropy in the theories of plasticity appears to be an extremely difficult task at this time; therefore, this effect will be ignored in the current work.

An evaluation of the possible end effects present in the thin-walled specimens is necessary in view of the fact that a 2-5/8-inch gage length is being used on specimens 5 inches long. To determine the end effect, a series of strain gages was attached to a thin-walled specimen, which was then subjected to tensile loads in the elestic range. Fig. 16 is a plot of the observed strain at eight stations on one-half of the tube. The strains were ratioed to gage No. 8, which was taken to have unit strain. Gage No. 1 was positioned so that the active element of the gage was just at the end of the uniform section of the tube. As can be seen, the strain is uniform to less than ± 1/2 per cent over the gage length. This result verifies the design criterion that the gage points be at least two diameters from the end of the tube.

6. DISCUSSION

a. Accuracies

Independent of the calibration accuracy of the various elements of the experimental setup, the accuracy of the determination of the test results is limited by the precision to which measurements can be made on the oscillograph trace. The work to date has indicated that such measurements can be made to about ± 0.1 per cent of full scale (i.e., ± 0.005 inch across the 6-inch film width). By appropriate switching of sensitivities for the various circuits of the test setup any portion of a test can be made to extend over the full scale. Thus, total quantities as well as their increments may be determined with comparable accuracies. This principle of sensitivity selection is demonstrated in the data of Figs. 14 and 15, where the elastic and large plastic strains were obtained with comparable accuracies.

The calibration of the various elements of the experimental setup can be made to a precision which is equal to that with which measurements are made on the oscillograph film. For example, the precision of the extensometer calibration is obtained by using accurate reference standards in the form of a 1/10,000-inch dial indicator and standard-angle sets. For

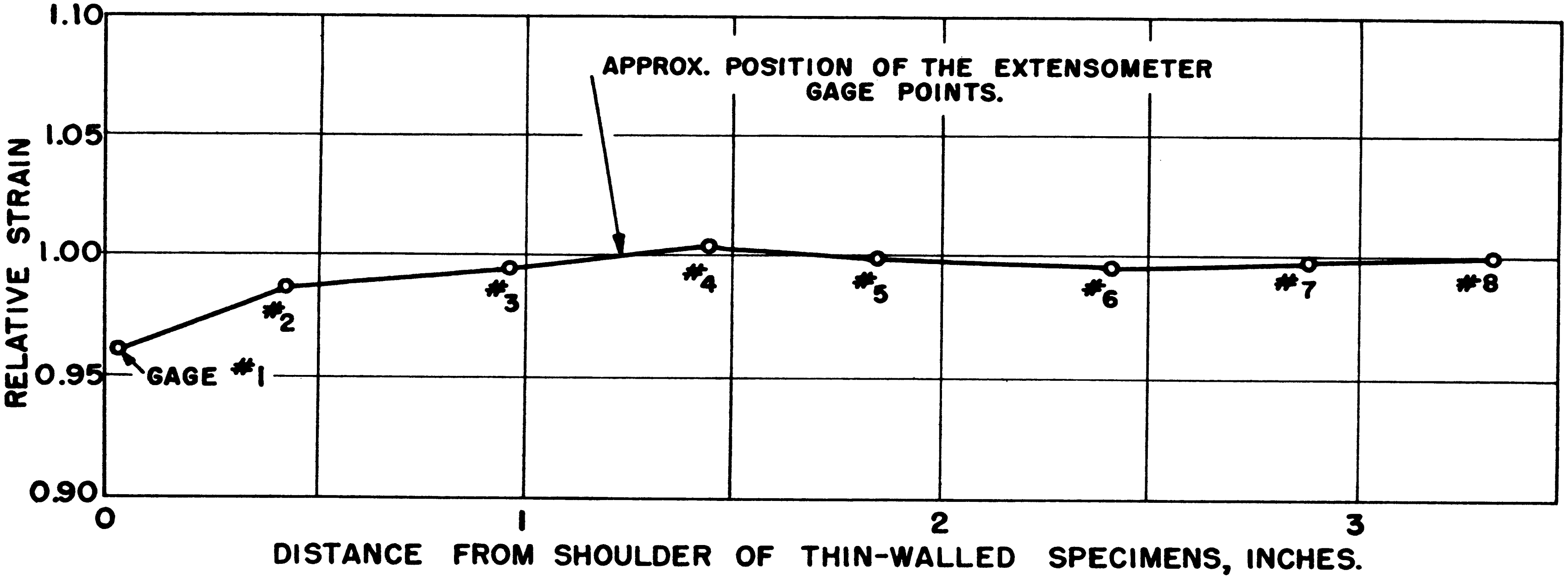

FIG. 16. RESULT OF END-EFFECT TESTS.

each sensitivity several calibrations (each containing a considerable number of calibration points) may be performed. This calibration should be performed initially with considerable care and precision. The calibration circuit will then retain this precision, and need only be reviewed periodically to check on the stability of the circuit. Experience has shown that the variations from calibration to calibration are very small and usually random in nature. Thus, it has proven possible to establish the relation between the calibrating resistors and the known reference standards to an accuracy within that of the oscillograph-trace measurements.

Drift of the circuitry, caused chiefly by thermal effects and polarization of the storage-cell power sources, might also cause errors over the run of a test. However, calibrations before and after tests have shown that this effect is negligible provided a sufficiently long warm-up period is allowed.

b. Diameter-to-Wall-Thickness Ratio for Thin-Walled Specimens

In the design of a thin-walled tubular specimen it is of particular interest to determine the minimum allowable wall thickness that will still prevent torsional plastic buckling. This is due to the fact that it is highly desirable to have the specimen's wall as thin as can be realized in order to obtain as nearly uniform as possible a state of stress across the wall thickness. Several tubular specimens having various wall thickness were subjected to pure twist to check the design criterion of a minimum thickness-to-diameter ratio determined by Moore.* The results of these tests verified the work of Moore, in that for the thickness-to-diameter ratios of less than 1/10 (for 24S-T4 aluminum) the tube will buckle very soon after entering the plastic range.

c. Other Factors

Several other factors which may affect the test results should be mentioned. One is local flow, which might occur under the gage points of the extensometer. Another factor is the reaming and light polishing of the tubular specimens. It is difficult to imagine that these effects would not be small compared to other factors such as anisotropy, slight tube non-uniformities, etc. Until definite data can be obtained on the magnitude and significance of these factors, they will be neglected for this work.

---

*"Torsional Strength of Aluminum Alloy Round Tubing", by R. L. Moore, N.A.C.A. TN 879 (Jan. 1943).

7. CONCLUSION

The foregoing discussion presents the preliminary phases of the experimental investigation carried out since February, 1952. The tension-torsion machine, the extensometer, and associated experimental equipment are discussed in some detail. A brief description of the preliminary test results is given, together with a discussion of the possible accuracy attainable with the test setup. Such factors as grain size, anisotropy, and end effects which influence the test results are discussed. Concurrently, some fundamental experiments in plasticity are being initiated and a subsequent report will contain the results of these experiments.