No. 332
November 1996

Stability Criteria for the Slow Motion Nonlinear Dynamics of Towing and Mooring Systems

L.O. Garza-Rios
M.M. Bernitsas

Department of Naval Architecture
and Marine Engineering

No. 332
November 1996

STABILITY CRITERIA FOR THE SLOW MOTION NONLINEAR DYNAMICS OF TOWING AND MOORING SYSTEMS

by

L. O. Garza-Rios
M. M. Bernitsas

Prepared for the University of Michigan/Sea Grant/Industry Consortium in Offshore Engineering

Department of Naval Architecture
and Marine Engineering
College of Engineering
The University of Michigan
Ann Arbor, Michigan 48109-2145

ABSTRACT

Analytical expressions for the necessary and sufficient conditions for stability of towing and mooring systems with several lines are derived based on the Routh stability criteria. These expressions are combined to provide physics-based relations for the bifurcation boundaries occurring in towing and mooring systems as a parameter is varied, and thus can be used for design of mooring and towing systems. Further, these expressions prove that several rules of thumb generally are not applicable. The special case of symmetric towing/mooring systems is covered as well. In this particular case, the analytical expressions can be simplified to derive a number of rules that can be implemented readily in design. The mathematical model consists of the horizontal plane maneuvering equations (surge, sway, yaw) of the towed/moored vessel without memory under steady current excitation, and a quasistatic model for the mooring/towing lines. The line static behavior is modeled by (i) nonlinear elastic strings (nylon, polyester); or (ii) heavy, inextensible catenaries. Other mooring line models (i.e. three-dimensional extensible finite element model) and external excitations (i.e. wind and second order mean drift forces) can be incorporated in the model.

ACKNOWLEDGMENTS

This report is a result of research sponsored by the University of Michigan/Sea Grant/Industry Consortium in Offshore Engineering under Michigan Sea Grant College Program, projects number R/T-29 and R/T-35 under grant numbers NA89AA-D-SG083C and DOC-NA36RG0506 from the Office of Sea Grant, National Oceanic and Atmospheric Administration (NOAA), U.S. Department of Commerce, and funds from the State of Michigan. Industry participants include Amoco, Inc.; Conoco, Inc.; Exxon Production Research; Mobil Research and Development; Shell Companies Foundation; and Elf Aquitaine, Pau, France.

TABLE OF CONTENTS

p.#

ABSTRACT ii

ACKNOWLEDGMENTS iii

LIST OF FIGURES vi

LIST OF TABLES vii

LIST OF APPENDICES viii

NOMENCLATURE ix

INTRODUCTION 1

CHAPTER

I. THEORETICAL BACKGROUND 2

1.1. Routh's Stability Criterion 2

II. MATHEMATICAL MODEL 4

2.1. Equations of Motion 5
2.2. Kinematic and Geometric Relations 7
2.3. Towing/Mooring Line Models 8

III. STATE SPACE REPRESENTATION AND EQUILIBRIA OF TOWING/MOORING SYSTEMS 10

3.1. State Space Representation 10
3.2. Equilibria of Towing and Mooring Systems 11

IV. ANALYTICAL STABILITY CRITERIA AND LOSS OF STABILITY 14

4.1. Expansion of the Equations of Motion 14
4.1.1. Expansion of the Surge Equation of Motion 16
4.1.2. Expansion of the Sway Equation of Motion 19
4.1.3. Expansion of the Yaw Equation of Motion 21
4.2. Stability Coefficients and Characteristic Equation 24
4.3. Stability Criteria for Towing/Mooring Systems 28
4.4. Loss of Stability in Towing/Mooring Systems 29
4.5. Numerical Examples 31

V. SYMMETRIC TOWING/MOORING SYSTEMS **34**

5.1. Equilibrium and Expansion of Variables 35
5.2. Equations of Motion in Symmetric Towing/Mooring Systems 38
5.3. Stability Coefficients and Characteristic Equation 39
5.4. Stability Criteria for Symmetric Towing/Mooring Systems 40
5.5. Active Stability Criteria for Symmetric Systems 41
5.6. Loss of Stability in Symmetric Systems 42
5.7. Numerical Examples 45

APPENDICES **47**

BIBLIOGRAPHY **68**

LIST OF FIGURES

Figure **p.#**

2.1. Geometry of general towing/mooring system 4

4.1. Values of C_{RS} and C_{RC}, 3-line barge with skegs: $\ell_w/L = 0.5$, $y_p/B = 0.5$, $\Omega = 15°$, $E_I = 0.012$ 33

5.1. Geometry of symmetric towing/mooring system 34

5.2. Geometric relations of parameters x_p, y_p and γ in symmetric systems 36

5.3. Values of R_1 and R_2, 3-line barge with skegs: $\ell_w/L = 0.5$, $y_p/B = 0.5$, $\Omega = 15°$, $E_I = 0.012$ 46

LIST OF TABLES

Table **p.#**

4.1. Eigenvalues for 3-line barge with skegs 32

4.2. Sixth-order stability criteria for 3-line barge with skegs 32

5.1. Fourth-order stability criteria for 3-line barge with skegs 45

LIST OF APPENDIXES

Appendix **p.#**

1. First Order Expansion of Geometric Angles 48
2. First Order Variation of Towing/Mooring Line Length 51
3. First Order Variation of Towing/Mooring Line Tension 53
4. First Order Variation of Vessel Velocities and Accelerations in Terms of the Absolute Position Vector and its Time Derivatives 55
5. First Order Variation of Hydrodynamic Forces and Moment in Terms of the Absolute Position Vector and its Time Derivatives 57
6. First Order Expansion of the Equations of Motion in Terms of the Position Variables and their Time Derivatives 63

NOMENCLATURE

a,b,c	dummy independent variables representing u,v,r and δ in functions $X(u,v,r)$, $Y(u,v,r)$ and $N(u,v,r)$
B	beam of the vessel
C_B	block coefficient of vessel
CG	center of gravity of vessel
D	depth of vessel
DLS	Dynamic Loss of Stability
DUM	Dimension of the Unstable Manifold
$E_I^{(j)}$	initial strain in the *jth* line
h	depth of immersion of the lines
H	draft of vessel
I_z	mass moment of inertia of vessel about the Z-axis
$\ell^{(i)}$	horizontal length of the *ith* line
L, LBP	length of the vessel
$\ell_I^{(i)}$	initial length of the *ith* pretensioned line
$\ell_w^{(i)}$	working length of the undeformed *ith* line
m	mass of vessel
n	number of towing/mooring lines
NSC	Number of Sign Changes
$N(u,v,r)$	velocity dependent hydrodynamic moment about the Z-axis
N_a	derivative of yaw hydrodynamic moment with respect to a
N_{ab}	derivative of yaw hydrodynamic moment with respect to a and b
N_{abc}	derivative of yaw hydrodynamic moment with respect to a, b and c
N_o	yaw hydrodynamic moment due to propeller
$N_{\dot{r}}$	hydrodynamic added moment of inertia in yaw due to a unit sway acceleration
$N_{\dot{v}}$	hydrodynamic added moment of inertia in yaw due to a unit yaw acceleration
P	vertical force per unit catenary length
r	yaw angular velocity of vessel with respect to water
R	vessel resistance
$R_x^{(i)}$	reaction component of the *ith* line in the x-direction

$R_y^{(i)}$	reaction component of the *ith* mooring line in the *y*-direction
SLS	Static Loss of Stability
t	time
$T^{(i)}$	Tension in the *ith* line
$T_I^{(i)}$	Initial pretension in the *ith* line
U	relative velocity between vessel and surrounding water
U_c	velocity of current
u	forward velocity of vessel with respect to water
v	lateral velocity of vessel with respect to water
(x, y)	earth-fixed coordinates
(X, Y, Z)	body-fixed coordinates
$X(u, v, r)$	velocity dependent hydrodynamic force in the *X*-direction
X_a	derivative of surge hydrodynamic force with respect to *a*
X_{ab}	derivative of surge hydrodynamic force with respect to *a* and *b*
X_{abc}	derivative of surge hydrodynamic force with respect to *a*, *b* and *c*
X_o	surge hydrodynamic force due to propeller
$(x_m^{(i)}, y_m^{(i)})$	mooring coordinates of the *ith* line relative to the earth fixed coordinates
$(x_p^{(i)}, y_p^{(i)})$	body fixed coordinates of the *ith* fairlead
$(x_T^{(i)}, y_T^{(i)})$	attachment coordinates of the *ith* line relative to the earth fixed coordinates
$X_{\dot{u}}$	hydrodynamic added mass in surge due to a unit surge acceleration
$Y(u, v, r)$	velocity dependent hydrodynamic force in the *Y*-direction
Y_a	derivative of sway hydrodynamic force with respect to *a*
Y_{ab}	derivative of sway hydrodynamic force with respect to *a* and *b*
Y_{abc}	derivative of sway hydrodynamic force with respect to *a*, *b* and *c*
Y_o	sway hydrodynamic force due to propeller
$Y_{\dot{r}}$	hydrodynamic added mass in sway due to a unit yaw acceleration
$Y_{\dot{v}}$	hydrodynamic added mass in sway due to a unit sway acceleration

Greek Symbols

$\gamma^{(i)}$	angle between the x-axis and the *ith* line, measured counter-clockwise
δ	rudder angle
Δ	displacement of vessel
$\Delta(\bullet)$	first order perturbation of $(\bullet)$

σ_i	*ith* eigenvalue of the linearized system in the stability criteria
ψ	yaw (or drift) angle
$\omega^{(i)}$	angle between the *ith* line and the *X*-axis, measured counter-clockwise
$\Omega^{(i)}$	angle of aperture between the *x*-axis and the *ith* line

Special Symbols

D	time derivative operator = $\frac{d(\,)}{dt}$
$\overline{(\bullet)}$	equilibrium of $(\bullet)$

INTRODUCTION

The objectives in preliminary towing and mooring analysis are to study the motions and stability properties of the vessel. Systematic parametric analysis can be used to determine the effects of various parameters such as length, orientation, position of the towing/mooring lines, hull hydrodynamics, etc., on the system response. The problems involving maneuvering, towing and mooring have been studied widely theoretically, numerically and experimentally [1, 2, 3, 10, 12, 13, 16, 17, 18, 24, 25]. Extensive analyses based on nonlinear dynamics and bifurcation theories have been conducted for Single Point Mooring (SPM) [7], Two-Point Mooring (TPM) [4, 11] and Spread Mooring Systems (SMS) [5, 14], including their related towing problems [6, 8]. The methodology for design of towing/mooring systems developed in our previous work consists of defining an appropriate mathematical model for a particular system, evaluating numerically its eigenvalues to determine its stability, and performing bifurcation analysis to determine the qualitative changes of the system dynamics as a parameter, or a limited number of parameters, are varied. This approach drastically reduces trial and error in design, and nearly eliminates extensive nonlinear time simulations.

Further, the dynamics of the system can be discerned without numerically obtaining the system eigenvalues and directly applying bifurcation theory by the methodology developed in this report. Specifically, analytical expressions for the necessary and sufficient conditions for the system stability are derived. These expressions, which are directly related to the system eigenvalues (see Chapters I, IV and V), provide physics-based relations that reveal the morphogeneses ocurring in towing and mooring systems as bifurcation boundaries are crossed. Such expressions can be combined to provide analytical (closed form solutions) means for determining points in the parametric design space where static and dynamic loss of stability occur, as well as elementary singularities and roots to chaos. The expressions derived in this report also serve to determine analytically the dependence of the system on any design parameter.

I. THEORETICAL BACKGROUND

The stability of towing and mooring systems can be evaluated by establishing an appropriate mathematical model, and numerically obtaining the eigenvalues of the system around an equilibrium position.. If all eigenvalues have negative real parts, the system is stable [15]. If at least one eigenvalue has a positive real part, the system is unstable, and all trajectories initiating near that particular equilibrium position will deviate from it. Alternatively, the stability characteristics of a linear, time-invariant system can also be determined from the characteristic equation of the system, as described in Section 1.1. The stability criterion developed by E.J. Routh, provides a means for determining the stability of the system without evaluating explicitly the roots (or eigenvalues) of the characteristic equation.

1.1. Routh's Stability Criterion

The Routh stability criterion establishes a simple method to determine the number of eigenvalues in the system with positive real part [22]. Consider the characteristic equation:

$$a_n\sigma^n + a_{n-1}\sigma^{n-1} + a_{n-2}\sigma^{n-2} + a_{n-3}\sigma^{n-3} + \ \ldots\ldots\ + a_1\sigma + a_0 = 0 \ . \tag{1.1}$$

The coefficients a_i of (1.1) are arranged in the patterns shown in the Routhian array below, and these coefficients are used to evaluate the remaining constants to complete the array.

Routhian Array

σ^n	a_n	a_{n-2}	a_{n-4}	$\cdots$
σ^{n-1}	a_{n-1}	a_{n-3}	a_{n-5}	$\cdots$
σ^{n-2}	$b1$	$b2$	$b3$	$\cdots$
σ^{n-3}	c_1	$c2$	$c3$	$\cdots$
σ^{n-4}	d_1	d_2	d_3	$\cdots$
$\vdots$	$\cdots$	$\cdots$	$\cdots$	$\cdots$
σ^1	$g1$			
σ^0	h_1			

The coefficients b_1, b_2, b_3, etc. in the Routhian array are defined as follows:

$$b_1 = \frac{a_{n-1}a_{n-2} - a_n a_{n-3}}{a_{n-1}} \; ; \quad b_2 = \frac{a_{n-1}a_{n-4} - a_n a_{n-5}}{a_{n-1}} \; ; \quad b_3 = \frac{a_{n-1}a_{n-6} - a_n a_{n-7}}{a_{n-1}} \; ; \; \ldots\ldots\ldots \; .$$

The pattern is continued until the rest of the b's are zero. The row corresponding to the coefficients c_1, c_2, c_3, etc, is formed by using the σ^{n-1} and σ^{n-2} rows. The constants are:

$$c_1 = \frac{b_1 a_{n-3} - a_{n-1}b_2}{b_1} \; ; \quad c_2 = \frac{b_1 a_{n-5} - a_{n-1}b_3}{b_1} \; ; \quad c_3 = \frac{b_1 a_{n-7} - a_{n-1}b_4}{b_1} \; ; \; \ldots\ldots\ldots \; .$$

This is continued until no more c terms are present. The rest of the rows are formed by following the same procedure to the σ^0 row. The complete array is triangular,and the last two rows contain only one term each.

Necessary and sufficient conditions for the system to be stable are:

1. All the coefficients of the characteristic equation (1.1) must exist.
2. All the coefficients of the first column in the Routh array must have the same sign.

If the second condition above is not met, the number of sign changes will indicate the number of roots of the characteristic equation (1.1) (or eigenvalues) which have positive real parts.

In this report, characteristic equations for general and symmetric towing/mooring systems of the form (1.1) are derived. The Routh stability criterion is then applied to specific systems to evaluate their stability. The expressions derived for stability in this report are analytical. Analytical expressions for the bifurcations occurring in the system as a parameter varies are derived in Chapters IV and V, and constitute the major contribution of this report.

II. MATHEMATICAL MODEL

Figure 2.1 depicts the geometry of a general towing/mooring system, and has two different coordinate systems: (i) A body fixed reference frame (X,Y,Z) with its origin located at the center of gravity (CG) of the vessel. In this frame, (X,Y) is the horizontal plane and (X,Z) the center plane of symmetry. (ii) An inertial frame (x,y) fixed to the earth and with the origin located at Terminal 1. The coordinate x is defined perpendicular to the initial direction of the current; y is defined normal to x. The towing/mooring lines are numbered counter-clockwise starting from the line at Terminal 1.

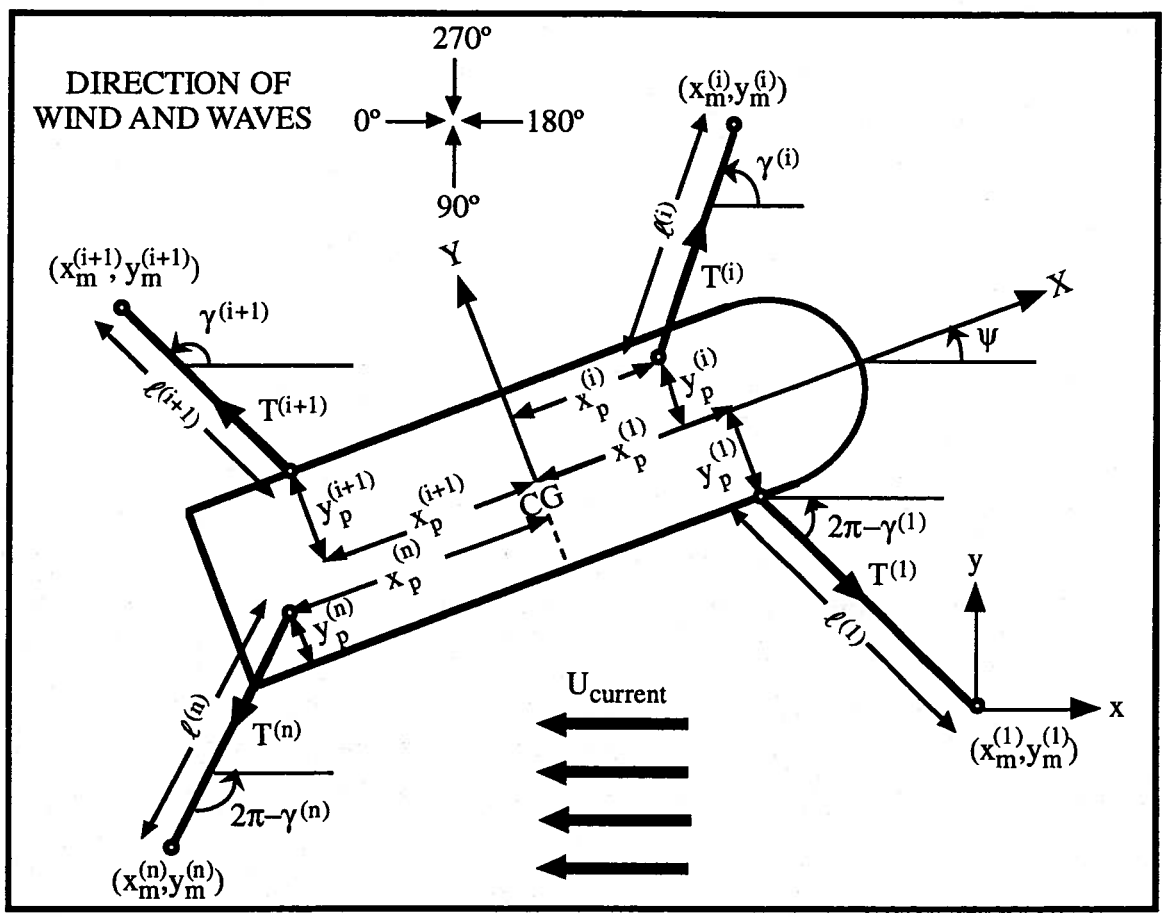

Figure 2.1: Geometry of general towing/mooring system

In Figure 2.1, the geometric design variables required in the study of towing and mooring systems are the following:

$(x_p^{(i)}, y_p^{(i)})$ are the body fixed coordinates of the *ith* line fairlead; $(x_m^{(i)}, y_m^{(i)})$ are the coordinates of the *ith* line with respect to the (x, y) frame; $\gamma^{(i)}$ is the angle from the x-axis to the *ith* line, measured counter-clockwise; $T^{(i)}$ is the tension of the *ith* line; $\ell^{(i)}$ is the length of the *ith* line; ψ is the yaw (or drift) angle. It must be mentioned that, in general, towing systems use only a limited number of towing lines (≤ 2), directed toward the towing vessel or vessels.

2.1. Equations of Motion

The nonlinear equations of motion in surge, sway and yaw are expressed in the (x, y) system of coordinates as follows:

$$(m - X_{\dot{u}})\dot{u} - mrv = X(u,v,r) + \sum_{i=1}^{n} T_{surge}^{(i)} + F_{surge} \ , \tag{2.1}$$

$$(m - Y_{\dot{v}})\dot{v} - Y_{\dot{r}}\dot{r} + mru = Y(u,v,r) + \sum_{i=1}^{n} T_{sway}^{(i)} + F_{sway} \ , \tag{2.2}$$

$$-N_{\dot{v}}\dot{v} + (I_z - N_{\dot{r}})\dot{r} = N(u,v,r) + \sum_{i=1}^{n} \left(x_p^{(i)} T_{sway}^{(i)} - y_p^{(i)} T_{surge}^{(i)} \right) + N_{yaw} \ , \tag{2.3}$$

where m is the mass of the vessel; I_z is the moment of inertia about the Z-axis; u, v, and r are the relative velocities of the vessel with respect to water in surge, sway and yaw, respectively. In the above equations, the linear acceleration terms are included in the left hand side and represent added mass and added moment of inertia terms. The expressions $X(u,v,r)$, $Y(u,v,r)$ and $N(u,v,r)$ are the velocity dependent hydrodynamic forces and moment in the surge, sway and yaw directions, respectively. These expressions have been expanded in Taylor series following [1]. In nonlinear analysis, terms up to third order are used:

$$\begin{aligned} X(u,v,r) = {} & X_o + X_u u + \frac{1}{2} X_{uu} u^2 + \frac{1}{6} X_{uuu} u^3 + \frac{1}{2} X_{vv} v^2 + \frac{1}{2} X_{rr} r^2 + \frac{1}{2} X_{\delta\delta} \delta^2 \\ & + \frac{1}{2} X_{vvu} v^2 u + \frac{1}{2} X_{rru} r^2 u + \frac{1}{2} X_{\delta\delta u} \delta^2 u + X_{vr} vr + X_{v\delta} v\delta + X_{r\delta} r\delta \\ & + X_{vru} vru + X_{v\delta u} v\delta u + X_{r\delta u} r\delta u \ , \end{aligned} \tag{2.4}$$

$$
\begin{aligned}
Y(u,v,r) = {} & Y_o + Y_{ou}u + \frac{1}{2}Y_{ouu}u^2 + Y_v v + \frac{1}{6}Y_{vvv}v^3 + \frac{1}{2}Y_{vrr}vr^2 + \frac{1}{2}Y_{v\delta\delta}v\delta^2 \\
& + Y_{vu}vu + \frac{1}{2}Y_{vuu}vu^2 + Y_r r + \frac{1}{6}Y_{rrr}r^3 + \frac{1}{2}Y_{rvv}rv^2 + \frac{1}{2}Y_{r\delta\delta}r\delta^2 \\
& + Y_{ru}ru + \frac{1}{2}Y_{ruu}ru^2 + Y_\delta\delta + \frac{1}{6}Y_{\delta\delta\delta}\delta^3 + \frac{1}{2}Y_{\delta vv}\delta v^2 + \frac{1}{2}Y_{\delta rr}\delta r^2 \\
& + Y_{\delta u}\delta u + \frac{1}{2}Y_{\delta uu}\delta u^2 + Y_{vr\delta}vr\delta \ ,
\end{aligned}
\tag{2.5}
$$

$$
\begin{aligned}
N(u,v,r) = {} & N_o + N_{ou}u + \frac{1}{2}N_{ouu}u^2 + N_v v + \frac{1}{6}N_{vvv}v^3 + \frac{1}{2}N_{vrr}vr^2 + \frac{1}{2}N_{v\delta\delta}v\delta^2 \\
& + N_{vu}vu + \frac{1}{2}N_{vuu}vu^2 + N_r r + \frac{1}{6}N_{rrr}r^3 + \frac{1}{2}N_{rvv}rv^2 + \frac{1}{2}N_{r\delta\delta}r\delta^2 \\
& + N_{ru}ru + \frac{1}{2}N_{ruu}ru^2 + N_\delta\delta + \frac{1}{6}N_{\delta\delta\delta}\delta^3 + \frac{1}{2}N_{\delta vv}\delta v^2 + \frac{1}{2}N_{\delta rr}\delta r^2 \\
& + N_{\delta u}\delta u + \frac{1}{2}N_{\delta uu}\delta u^2 + N_{vr\delta}vr\delta \ .
\end{aligned}
\tag{2.6}
$$

The terms in the above equations represent mainly damping terms associated with viscous effects and energy dissipation due to waves. Subscripts "o" and "δ" represent propeller and rudder angle effects.

In equations (2.1)-(2.3), n is the number of towing/mooring lines in the system; F_{surge}, F_{sway}, and N_{yaw} are the external forces and moment exerted on the vessel, and include steady wind and second order wave mean drift forces; T_{surge} and T_{sway} are the tension in each of the towing/mooring lines for the surge and sway directions respectively:

$$T_{surge} = T\cos\omega = R_x\cos\psi + R_y\sin\psi \ , \quad (i = 1, \ldots n) \ , \tag{2.7}$$

$$T_{sway} = -T\sin\omega = R_y\cos\psi - R_x\sin\psi \ , \quad (i = 1, \ldots n) \ , \tag{2.8}$$

where R_x and R_y represent the reaction forces in the x and y-directions as follows:

$$R_x^{(i)} = T^{(i)}\cos\gamma^{(i)} \ , \tag{2.9}$$

$$R_y^{(i)} = T^{(i)}\sin\gamma^{(i)} \ . \tag{2.10}$$

2.2. Kinematic and Geometric Relations

The kinematics of the system relate the velocity components (u, v, r) of the vessel with respect to water to the absolute velocities ($\dot{x}, \dot{y}, \dot{\psi}$) with respect to the ($x$, y) frame as

$$\dot{x} = u\cos\psi - v\sin\psi - U \ , \tag{2.11}$$

$$\dot{y} = v\cos\psi + u\sin\psi \ , \tag{2.12}$$

$$\dot{\psi} = r \ . \tag{2.13}$$

In equation (2.11), U is the absolute value of the current speed in the negative x-direction. For the towing problem, this accounts for the relative speed between the current and the tugboat(s). The directional changes between the current and the vessel (i.e. headings) can be integrated in the mathematical model either by modifying the kinematic relations (2.11)-(2.13), or by rotating the system appropriately.

The geometry of the system, as well as the position of the vessel with respect to its center of gravity and orientation of each of the towing/mooring lines, are described by the following relations:

$$\omega = 2\pi - \gamma + \psi, \quad (i = 1, \ldots n) \tag{2.14}$$

$$\cos\gamma = \frac{x_m - x_T}{\ell}, \quad (i = 1, \ldots n) \tag{2.15}$$

$$\sin\gamma = \frac{y_m - y_T}{\ell}, \quad (i = 1, \ldots n) \tag{2.16}$$

$$\ell = \sqrt{(x_m - x_T)^2 + (y_m - y_T)^2}, \quad (i = 1, \ldots n) \tag{2.17}$$

$$x_T = x + x_p\cos\psi - y_p\sin\psi, \quad (i = 1, \ldots n) \tag{2.18}$$

$$y_T = y + x_p\sin\psi + y_p\cos\psi. \quad (i = 1, \ldots n) \tag{2.19}$$

2.3. Towing/Mooring Line Models

In towing and mooring, three different types of mooring lines may be used during operations: chains, cables, and/or synthetic ropes. Chains are heavier and have high hydrodynamic resistance, are usually fully submerged, only slightly extensible, and have deformation in the vertical plane. Chains are modeled by the catenary equation [21]. Cables are lighter than chains, have less resistance but are more extensible. Cables may be partially submerged, and their deformation is in general three-dimensional [21]. Steel cables are modeled by a nonlinear cable model that takes into consideration partial submergence, three-dimensional deformation, effective tension, extensibility, and nonlinear drag. Elastic ropes (nylon, polyester) are even lighter, have lower resistance, are considerably extensible, function primarily out of the water, and the major nonlinear effect comes from their extensibility. For the analysis presented in this report, nonlinear synthetic ropes and inextensible catenaries are used to model the lines, since they produce analytical expressions for the stability criteria. For the nonlinear elastic string, the line tension is given by the semi-empirical equation [20]:

$$T = S_b p \left(\frac{\ell - \ell_w}{\ell_w} \right)^q , \tag{2.20}$$

where T is the actual tension in the synthetic rope, S_b is the average breaking strength; p and q are empirically determined constants, and ℓ_w is the working length of the unstrained rope. For the numerical examples presented in this work, $S_b = 3025$ KN (680,625 lbf), $p = 9.78$, and $q = 1.93$ [21]. These properties correspond to a wet nylon rope of 120 mm diameter.

For the inextensible catenary model, the horizontal tension is obtained by solving the equation

$$\sinh\left(\frac{P\ell}{2T} \right) = \frac{P\ell}{2T} \left[\frac{\sqrt{\ell_w^2 - h^2}}{\ell} \right] , \tag{2.21}$$

where P is the net vertical force per unit catenary length, and h is the depth of immersion of the line. In this particular case, ℓ is the horizontal component of the line length [21]. Equation (2.21) assumes that the catenary line(s) is not in contact with the sea bed. In deep-sea mooring, where a portion of the catenary line touches the sea bed, the expression for the

mooring line tension is different since the horizontal projected length in this case is not equal to the horizontal component of the mooring line length. This case will be treated in a later report.

Pretension: For systems with multiple lines, a vessel may be placed in such a position relative to the towing/mooring terminals, that one or several lines may be set to an initial tension (pretension), denoted by T_I. For the nonlinear elastic string, such pretension exists if $\ell > \ell_w$, and is defined in terms of the initial strain E_I as:

$$E_I = \frac{\ell_I - \ell_w}{\ell_w} \ , \tag{2.22}$$

where ℓ_I denotes the initial length of the pretensioned line. The expression for the initial pretension is therefore given by:

$$T_I = S_b p (E_I)^q \ . \tag{2.23}$$

For the catenary line, $0 < \ell < \ell_w$, and thus the pretension T_I must be defined accordingly. In this report, the catenary pretension is defined relative to the resistance of the vessel R as follows:

$$T_I = \frac{P\sqrt{\ell_w^2 - h^2}}{2R \sinh\left(\dfrac{P\ell}{2T_I R}\right)} \ . \tag{2.24}$$

Thus, the horizontal projection of the catenary length, ℓ, can be defined as

$$\ell = \frac{2T_I R}{P} \sinh^{-1}\left(\frac{P\sqrt{\ell_w^2 - h^2}}{2T_I R}\right) \ . \tag{2.25}$$

Mathematically, the concept of pretension is used to define the position of the moored/towed vessel with respect to the (x, y) reference frame. It should be noted, however, that the mean tension of a line at equilibrium will be different generally from its initial pretension.

III. STATE SPACE REPRESENTATION AND EQUILIBRIA OF TOWING AND MOORING SYSTEMS

3.1. State Space Representation

The nonlinear model presented in Chapter II is autonomous. Irregardless of the number of towing/mooring lines, the system can be reduced to a system of six first order nonlinear coupled differential equations by eliminating all but six variables [11]. For systems where the number of towing/mooring lines is unspecified, it is convenient to represent the system in terms of the position and velocity vectors of the vessel. Selecting the following state variables vector:

$$\mathbf{x} = (x_1 = u,\ x_2 = v,\ x_3 = r,\ x_4 = x,\ x_5 = y,\ x_6 = \psi)^{\mathrm{T}}\ , \tag{3.1}$$

the system nonlinear model can be rewritten in Cauchy standard form as

$$\dot{x}_1 = \frac{1}{(m - X_{\dot{u}})}\left\{ X(x_1,x_2,x_3) + \sum_{i=1}^{n}\left(R_x^{(i)}\cos x_6 + R_y^{(i)}\sin x_6 \right) + m x_2 x_3 + F_{surge}(x_6) \right\}\ , \tag{3.2}$$

$$\begin{aligned}\dot{x}_2 = {} & \frac{(I_z - N_{\dot{r}})}{D}\left\{ Y(x_1,x_2,x_3) + \sum_{i=1}^{n}\left(R_y^{(i)}\cos x_6 - R_x^{(i)}\sin x_6 \right) - m x_1 x_3 + F_{sway}(x_6) \right\} \\ & + \frac{Y_{\dot{r}}}{D}\left\{ N(x_1,x_2,x_3) + \sum_{i=1}^{n}\left(x_p^{(i)} R_y^{(i)} - y_p^{(i)} R_x^{(i)} \right)\cos x_6 \right\} \\ & + \frac{Y_{\dot{r}}}{D}\left\{ -\sum_{i=1}^{n}\left(x_p^{(i)} R_x^{(i)} + y_p^{(i)} R_y^{(i)} \right)\sin x_6 + N_{yaw}(x_6) \right\}\ ,\end{aligned} \tag{3.3}$$

$$\begin{aligned}\dot{x}_3 = {} & \frac{N_{\dot{v}}}{D}\left\{ Y(x_1,x_2,x_3) + \sum_{i=1}^{n}\left(R_y^{(i)}\cos x_6 - R_x^{(i)}\sin x_6 \right) - m x_1 x_3 + F_{sway}(x_6) \right\} \\ & + \frac{(m - Y_{\dot{v}})}{D}\left\{ N(x_1,x_2,x_3) + \sum_{i=1}^{n}\left(x_p^{(i)} R_y^{(i)} - y_p^{(i)} R_x^{(i)} \right)\cos x_6 \right\} \\ & + \frac{(m - Y_{\dot{v}})}{D}\left\{ -\sum_{i=1}^{n}\left(x_p^{(i)} R_x^{(i)} + y_p^{(i)} R_y^{(i)} \right)\sin x_6 + N_{yaw}(x_6) \right\}\ ,\end{aligned} \tag{3.4}$$

$$\dot{x}_4 = x_1 \cos x_6 - x_2 \sin x_6 - U \ , \tag{3.5}$$

$$\dot{x}_5 = x_1 \sin x_6 + x_2 \cos x_6 \ , \tag{3.6}$$

$$\dot{x}_6 = x_3 \ , \tag{3.7}$$

where $D = (I_z - N_{\dot{r}})(m - Y_{\dot{v}}) - N_v Y_r$. The reaction forces $R_x^{(i)}$ and $R_y^{(i)}$, defined by auxiliary equations (2.9) and (2.10), have been used instead of $T^{(i)}$, and are indirect functions of the state variables x_4, x_5 and x_6.

Hereafter, evolution equations (3.2)-(3.7) will be denoted as:

$$\dot{\boldsymbol{x}} = \boldsymbol{f}(\boldsymbol{x}) \ , \quad \boldsymbol{f} \in \mathrm{C}^1 \ , \quad \boldsymbol{f} : \Re^6 \rightarrow \Re^6 \ , \tag{3.8}$$

where $\Re^6$ is the six-dimensional Euclidean space and C^1 is the class of continuously differentiable functions.

For the state space representation selected above, all variables, vector field $\boldsymbol{f}$, and the corresponding Jacobian $\boldsymbol{Df(x)}$ are continuous functions of $\boldsymbol{x}$. The Jacobian of $\boldsymbol{f}$ exists even if variables corresponding to slack lines are not defined ($\ell^{(i)}$, $\gamma^{(i)}$, $\omega^{(i)}$), because they do not appear explicitly in the vector field. Instead, functions $R_x^{(i)}$ and $R_y^{(i)}$ - which are continuously differentiable functions in terms of $\boldsymbol{x}$ when one or several towing or mooring lines are slack - appear.

3.2. Equilibria of Towing and Mooring Systems

Equilibria of the nonlinear system are stationary flows of the vector field (3.1), and can be computed as intersections of null clines [23]. Accordingly, all equilibria (singular flows or stationary solutions) can be found by setting the time derivative of the state variable vector to zero, i.e.

$$\bar{\boldsymbol{x}} \in \Re^6 \text{ is an equilibrium of } \dot{\boldsymbol{x}} = \boldsymbol{f}(\boldsymbol{x}) \ \Leftrightarrow \ \boldsymbol{f}(\bar{\boldsymbol{x}}) \equiv \boldsymbol{0} \ . \tag{3.9}$$

The overbar on the state variable vector $\bar{\boldsymbol{x}}$ denotes an equilibrium state. The solution to the nonlinear component equations in (3.9) produces all possible equilibria in the system.

The equilibrium velocity vector can be recast in terms of state variable $\bar{x}_6$ from equations (3.5)-(3.7) as:

$$\bar{x}_1 = U\cos\bar{x}_6 \ , \tag{3.10}$$

$$\bar{x}_2 = -U\sin\bar{x}_6 \ , \tag{3.11}$$

$$\bar{x}_3 = 0 \ . \tag{3.12}$$

Relations (3.10)-(3.12) above can be substituted into equations (3.2)-(3.4), to yield three nonlinear coupled algebraic equations in terms of $\bar{x}_4$, $\bar{x}_5$ and $\bar{x}_6$ as follows:

$$\begin{aligned}
0 = {} & X_o + UX_u\cos\bar{x}_6 + \frac{1}{2}U^2X_{uu}\cos^2\bar{x}_6 + \frac{1}{6}U^3X_{uuu}\cos^3\bar{x}_6 + \frac{1}{2}U^2X_{vv}\sin^2\bar{x}_6 \\
& + \frac{1}{2}X_{\delta\delta}\delta^2 + \frac{1}{2}U^3X_{vvu}\sin^2\bar{x}_6\cos\bar{x}_6 + \frac{1}{2}UX_{\delta\delta u}\delta^2\cos\bar{x}_6 - UX_{v\delta}\delta\sin\bar{x}_6 \\
& - U^2X_{v\delta u}\delta\cos\bar{x}_6\sin\bar{x}_6 + \sum_{i=1}^{n}\left(\bar{R}_x^{(i)}\cos\bar{x}_6 + \bar{R}_y^{(i)}\sin\bar{x}_6\right) + F_{surge}(\bar{x}_6) \ ,
\end{aligned} \tag{3.13}$$

$$\begin{aligned}
0 = {} & (I_z - N_{\dot{r}})(Y_o + Y_\delta\delta + Y_{\delta\delta\delta}\delta^3) + Y_{\dot{r}}(N_o + N_\delta\delta + N_{\delta\delta\delta}\delta^3) \\
& + U\left[(I_z - N_{\dot{r}})(Y_{ou} + Y_{\delta u}\delta) + Y_{\dot{r}}(N_{ou} + N_{\delta u}\delta)\right]\cos\bar{x}_6 \\
& - U\left[(I_z - N_{\dot{r}})(Y_v + \frac{1}{2}Y_{v\delta\delta}\delta^2) + Y_{\dot{r}}(N_v + \frac{1}{2}N_{v\delta\delta}\delta^2)\right]\sin\bar{x}_6 \\
& + \frac{1}{2}U^2\left[(I_z - N_{\dot{r}})(Y_{ouu} + Y_{\delta uu}\delta) + Y_{\dot{r}}(N_{ouu} + N_{\delta uu}\delta)\right]\cos^2\bar{x}_6 \\
& + \frac{1}{2}U^2\left[(I_z - N_{\dot{r}})Y_{\delta vv} + Y_{\dot{r}}N_{\delta vv}\right]\delta\sin^2\bar{x}_6 - U^2\left[(I_z - N_{\dot{r}})Y_{vu} + Y_{\dot{r}}N_{vu}\right]\cos\bar{x}_6\sin\bar{x}_6 \\
& - \frac{1}{2}U^3\left[(I_z - N_{\dot{r}})Y_{vuu} + Y_{\dot{r}}N_{vuu}\right]\cos^2\bar{x}_6\sin\bar{x}_6 - \frac{1}{6}U^3\left[(I_z - N_{\dot{r}})Y_{vvv} + Y_{\dot{r}}N_{vvv}\right]\sin^3\bar{x}_6 \\
& + \sum_{i=1}^{n}\left\{\left[(I_z - N_{\dot{r}}) + Y_{\dot{r}}x_p^{(i)}\right]\left(\bar{R}_y^{(i)}\cos\bar{x}_6 - \bar{R}_x^{(i)}\sin\bar{x}_6\right) - Y_{\dot{r}}y_p^{(i)}\left(\bar{R}_x^{(i)}\cos\bar{x}_6 + \bar{R}_y^{(i)}\sin\bar{x}_6\right)\right\} \\
& + (I_z - N_{\dot{r}})F_{sway}(\bar{x}_6) + Y_{\dot{r}}N_{yaw}(\bar{x}_6) \ ,
\end{aligned} \tag{3.14}$$

$$\begin{aligned}
0 = {} & N_{\dot{v}}(Y_o + Y_\delta\delta + Y_{\delta\delta\delta}\delta^3) + (m - Y_{\dot{v}})(N_o + N_\delta\delta + N_{\delta\delta\delta}\delta^3) \\
& + U\left[N_{\dot{v}}(Y_{ou} + Y_{\delta u}\delta) + (m - Y_{\dot{v}})(N_{ou} + N_{\delta u}\delta)\right]\cos\bar{x}_6 \\
& - U\left[N_{\dot{v}}(Y_v + \frac{1}{2}Y_{v\delta\delta}\delta^2) + (m - Y_{\dot{v}})(N_v + \frac{1}{2}N_{v\delta\delta}\delta^2)\right]\sin\bar{x}_6
\end{aligned}$$

$$
\begin{aligned}
&+\frac{1}{2}U^2\left[N_{\dot{v}}(Y_{ouu}+Y_{\delta uu}\delta)+(m-Y_{\dot{v}})(N_{ouu}+N_{\delta uu}\delta)\right]\cos^2\bar{x}_6 \\
&+\frac{1}{2}U^2\left[N_{\dot{v}}Y_{\delta vv}+(m-Y_{\dot{v}})N_{\delta vv}\right]\delta\sin^2\bar{x}_6-U^2\left[N_{\dot{v}}Y_{vu}+(m-Y_{\dot{v}})N_{vu}\right]\cos\bar{x}_6\sin\bar{x}_6 \\
&-\frac{1}{2}U^3\left[N_{\dot{v}}Y_{vuu}+(m-Y_{\dot{v}})N_{vuu}\right]\cos^2\bar{x}_6\sin\bar{x}_6-\frac{1}{6}U^3\left[N_{\dot{v}}Y_{vvv}+(m-Y_{\dot{v}})N_{vvv}\right]\sin^3\bar{x}_6 \\
&+\sum_{i=1}^{n}\left\{\left[N_{\dot{v}}+(m-Y_{\dot{v}})x_p^{(i)}\right]\left(\bar{R}_y^{(i)}\cos\bar{x}_6-\bar{R}_x^{(i)}\sin\bar{x}_6\right)\right\} \\
&-\sum_{i=1}^{n}\left\{(m-Y_{\dot{v}})y_p^{(i)}\left(\bar{R}_x^{(i)}\cos\bar{x}_6+\bar{R}_y^{(i)}\sin\bar{x}_6\right)\right\}+N_{\dot{v}}F_{sway}(\bar{x}_6)+(m-Y_{\dot{v}})N_{yaw}(\bar{x}_6)\ , \quad (3.15)
\end{aligned}
$$

where $\bar{R}_x^{(i)}$ and $\bar{R}_y^{(i)}$ are functions of $\bar{x}_4$, $\bar{x}_5$ and $\bar{x}_6$. The equilibrium values for the position vector are obtained by solving the three simultaneous nonlinear algebraic equations (3.13)-(3.15). Due to the complexity of the system, these equations must be solved numerically. For single point towing/mooring systems, these equations may be combined to yield a single algebraic equation that can be solved for the position variable $\bar{x}_6=\bar{\psi}$ [7].

The number of equilibria that exist in the system strongly depends on the number and tension of the lines, the system configuration, and the environmental conditions. This is an important design issue since appropriate line and environmental parameters may allow the system to reach different plausible equilibria. Towing and mooring systems with relatively small pretension in the lines, for example, may inherently have several equilibria, since the vessel is not restricted from moving. In such cases, one or several lines may become slack, and, thus, an initial configuration may be transformed into a different one after equilibrium is achieved. Highly pretensioned systems, on the other hand, are configured to restrain the vessel from moving about its center of gravity, thus limiting the number of equilibria that can be attained.

IV. ANALYTICAL STABILITY CRITERIA AND LOSS OF STABILITY

The stability criteria of the system dynamics introduced in Chapter I can be applied readily in towing and mooring applications based on the mathematical model described in Chapter II, by converting the system into the form (1.1). The procedure to obtain the characteristic equation of the system consists of finding an appropriate equilibrium position for the vessel, perturbing, expanding and linearizing the equations of motion (2.1)-(2.3), near an equilibrium position. Then, the resulting equations are combined to yield an equation of the form (1.1).

4.1. Expansion of the Equations of Motion

Once the equilibrium position and velocities of the vessel have been identified, the equilibrium values of the variables appearing in the equations of motion (2.1)-(2.3) can be found, and these variables perturbed in the form

$$(\ ) = (\bar{\ }) + \Delta(\ )\ , \tag{4.1}$$

where ( ) is the variable in question; the overbar indicates the value of the variable at equilibrium, and the term $\Delta(\ )$ represents the first order variation (or perturbation) from equilibrium. The expansions for the variables involved in (2.1)-(2.3) are shown in Appendixes 1-5. After expansion of each variable in the form of (4.1), the equations of motion can be written as:

Surge

$$\begin{aligned}
&(m - X_{\dot{u}})(\cos\bar{\psi}\Delta\ddot{x} + \sin\bar{\psi}\Delta\ddot{y} + \bar{v}\Delta\dot{\psi}) - m\bar{v}\Delta\dot{\psi} = \bar{X} + \left(\frac{\overline{\partial X}}{\partial u}\cos\bar{\psi} - \frac{\overline{\partial X}}{\partial v}\sin\bar{\psi}\right)\Delta\dot{x} \\
&+\left(\frac{\overline{\partial X}}{\partial u}\sin\bar{\psi} + \frac{\overline{\partial X}}{\partial v}\cos\bar{\psi}\right)\Delta\dot{y} + \frac{\overline{\partial X}}{\partial r}\Delta\dot{\psi} + \left(\frac{\overline{\partial X}}{\partial u}\bar{v} - \frac{\overline{\partial X}}{\partial v}\bar{u}\right)\Delta\psi \\
&-\sum_{i=1}^{n}\left\{\left(\bar{T}^{(i)} + \frac{\overline{dT}^{(i)}}{d\ell^{(i)}}\Delta\ell^{(i)}\right)\left[\frac{\left(\bar{x} - x_m^{(i)}\right)\cos\bar{\psi} + \left(\bar{y} - y_m^{(i)}\right)\sin\bar{\psi} + x_p^{(i)}}{\left(\bar{\ell}^{(i)} + \Delta\ell^{(i)}\right)}\right]\right.
\end{aligned}$$

$$-\sum_{i=1}^{n}\left\{\left(\overline{T}^{(i)}+\frac{\overline{dT}^{(i)}}{d\ell^{(i)}}\Delta\ell^{(i)}\right)\frac{\cos\overline{\psi}}{\left(\overline{\ell}^{(i)}+\Delta\ell^{(i)}\right)}\right\}\Delta x-\sum_{i=1}^{n}\left\{\left(\overline{T}^{(i)}+\frac{\overline{dT}^{(i)}}{d\ell^{(i)}}\Delta\ell^{(i)}\right)\frac{\sin\overline{\psi}}{\left(\overline{\ell}^{(i)}+\Delta\ell^{(i)}\right)}\right\}\Delta y$$

$$+\sum_{i=1}^{n}\left\{\left(\overline{T}^{(i)}+\frac{\overline{dT}^{(i)}}{d\ell^{(i)}}\Delta\ell^{(i)}\right)\left[\frac{\left(\overline{x}-x_m^{(i)}\right)\sin\overline{\psi}-\left(\overline{y}-y_m^{(i)}\right)\cos\overline{\psi}}{\left(\overline{\ell}^{(i)}+\Delta\ell^{(i)}\right)}\right]\right\}\Delta\psi\ . \tag{4.2}$$

<u>Sway</u>

$$\left(m-Y_{\dot{v}}\right)\left(-\sin\overline{\psi}\Delta\ddot{x}+\cos\overline{\psi}\Delta\ddot{y}-\overline{u}\Delta\dot{\psi}\right)-Y_{\dot{r}}\Delta\ddot{\psi}+m\overline{u}\Delta\dot{\psi}=\overline{Y}$$

$$+\left(\frac{\overline{\partial Y}}{\partial u}\cos\overline{\psi}-\frac{\overline{\partial Y}}{\partial v}\sin\overline{\psi}\right)\Delta\dot{x}+\left(\frac{\overline{\partial Y}}{\partial u}\sin\overline{\psi}+\frac{\overline{\partial Y}}{\partial v}\cos\overline{\psi}\right)\Delta\dot{y}+\left(\frac{\overline{\partial Y}}{\partial u}\overline{v}-\frac{\overline{\partial Y}}{\partial v}\overline{u}\right)\Delta\psi$$

$$+\frac{\overline{\partial Y}}{\partial r}\Delta\dot{\psi}+\sum_{i=1}^{n}\left\{\left(\overline{T}^{(i)}+\frac{\overline{dT}^{(i)}}{d\ell^{(i)}}\Delta\ell^{(i)}\right)\left[\frac{\left(\overline{x}-x_m^{(i)}\right)\sin\overline{\psi}-\left(\overline{y}-y_m^{(i)}\right)\cos\overline{\psi}-y_p^{(i)}}{\left(\overline{\ell}^{(i)}+\Delta\ell^{(i)}\right)}\right]\right\}$$

$$+\sum_{i=1}^{n}\left\{\left(\overline{T}^{(i)}+\frac{\overline{dT}^{(i)}}{d\ell^{(i)}}\Delta\ell^{(i)}\right)\frac{\sin\overline{\psi}}{\left(\overline{\ell}^{(i)}+\Delta\ell^{(i)}\right)}\right\}\Delta x-\sum_{i=1}^{n}\left\{\left(\overline{T}^{(i)}+\frac{\overline{dT}^{(i)}}{d\ell}\Delta\ell^{(i)}\right)\frac{\cos\overline{\psi}}{\left(\overline{\ell}^{(i)}+\Delta\ell^{(i)}\right)}\right\}\Delta y$$

$$+\sum_{i=1}^{n}\left\{\left(\overline{T}^{(i)}+\frac{\overline{dT}^{(i)}}{d\ell^{(i)}}\Delta\ell^{(i)}\right)\left[\frac{\left(\overline{x}-x_m^{(i)}\right)\cos\overline{\psi}+\left(\overline{y}-y_m^{(i)}\right)\sin\overline{\psi}}{\left(\overline{\ell}^{(i)}+\Delta\ell^{(i)}\right)}\right]\right\}\Delta\psi\ . \tag{4.3}$$

<u>Yaw</u>

$$-N_{\dot{v}}\left(-\sin\overline{\psi}\Delta\ddot{x}+\cos\overline{\psi}\Delta\ddot{y}-\overline{u}\Delta\dot{\psi}\right)+\left(I_z-N_{\dot{r}}\right)\Delta\ddot{\psi}=\overline{N}+\left(\frac{\overline{\partial N}}{\partial u}\cos\overline{\psi}-\frac{\overline{\partial N}}{\partial v}\sin\overline{\psi}\right)\Delta\dot{x}$$

$$+\left(\frac{\overline{\partial N}}{\partial u}\sin\overline{\psi}+\frac{\overline{\partial N}}{\partial v}\cos\overline{\psi}\right)\Delta\dot{y}+\frac{\overline{\partial N}}{\partial r}\Delta\dot{\psi}+\left(\frac{\overline{\partial N}}{\partial u}\overline{v}-\frac{\overline{\partial N}}{\partial u}\overline{u}\right)\Delta\psi$$

$$+\sum_{i=1}^{n}\left\{\overline{T}^{(i)}\left[\frac{\left(\overline{x}-x_m^{(i)}\right)\left(x_p^{(i)}\sin\overline{\psi}+y_p^{(i)}\cos\overline{\psi}\right)-\left(\overline{y}-y_m^{(i)}\right)\left(x_p^{(i)}\cos\overline{\psi}-y_p^{(i)}\sin\overline{\psi}\right)}{\left(\overline{\ell}^{(i)}+\Delta\ell^{(i)}\right)}\right]\right\}$$

$$+\sum_{i=1}^{n}\left\{\frac{\overline{dT}^{(i)}}{d\ell^{(i)}}\Delta\ell^{(i)}\left[\frac{\left(\overline{x}-x_m^{(i)}\right)\left(x_p^{(i)}\sin\overline{\psi}+y_p^{(i)}\cos\overline{\psi}\right)-\left(\overline{y}-y_m^{(i)}\right)\left(x_p^{(i)}\cos\overline{\psi}-y_p^{(i)}\sin\overline{\psi}\right)}{\left(\overline{\ell}^{(i)}+\Delta\ell^{(i)}\right)}\right]\right\}$$

$$+\sum_{i=1}^{n}\left\{\left(\overline{T}^{(i)}+\frac{\overline{dT}^{(i)}}{d\ell^{(i)}}\Delta\ell^{(i)}\right)\left[\frac{y_p^{(i)}\cos\overline{\psi}-x_p^{(i)}\sin\overline{\psi}}{\left(\overline{\ell}^{(i)}+\Delta\ell^{(i)}\right)}\right]\Delta x\right.$$

$$
\begin{aligned}
&-\sum_{i=1}^{n}\left\{\left(\overline{T}^{(i)}+\frac{\overline{dT}^{(i)}}{d\ell^{(i)}}\Delta\ell^{(i)}\right)\left[\frac{x_p^{(i)}\cos\overline{\psi}-y_p^{(i)}\sin\overline{\psi}}{\left(\overline{\ell}^{(i)}+\Delta\ell^{(i)}\right)}\right]\right.\Delta y \\
&+\sum_{i=1}^{n}\left\{\overline{T}^{(i)}\left[\frac{\left(\overline{x}-x_m^{(i)}\right)\left(x_p^{(i)}\cos\overline{\psi}-y_p^{(i)}\sin\overline{\psi}\right)+\left(\overline{y}-y_m^{(i)}\right)\left(x_p^{(i)}\sin\overline{\psi}+y_p^{(i)}\cos\overline{\psi}\right)}{\left(\overline{\ell}^{(i)}+\Delta\ell^{(i)}\right)}\right]\right\}\Delta\psi \\
&+\sum_{i=1}^{n}\left\{\frac{\overline{dT}^{(i)}}{d\ell^{(i)}}\Delta\ell^{(i)}\left[\frac{\left(\overline{x}-x_m^{(i)}\right)\left(x_p^{(i)}\cos\overline{\psi}-y_p^{(i)}\sin\overline{\psi}\right)}{\left(\overline{\ell}^{(i)}+\Delta\ell^{(i)}\right)}\right]\right\}\Delta\psi \\
&+\sum_{i=1}^{n}\left\{\frac{\overline{dT}^{(i)}}{d\ell^{(i)}}\Delta\ell^{(i)}\left[\frac{\left(\overline{y}-y_m^{(i)}\right)\left(x_p^{(i)}\sin\overline{\psi}+y_p^{(i)}\cos\overline{\psi}\right)}{\left(\overline{\ell}^{(i)}+\Delta\ell^{(i)}\right)}\right]\right\}\Delta\psi\ . \qquad (4.4)
\end{aligned}
$$

In the following subsections, each of the equations of motion (4.2)-(4.4) is further expanded separately.

4.1.1. Expansion of the Surge Equation of Motion

The surge equation of motion (4.2) is of the form:

$$
f=\overline{Z}+\sum_{i=1}^{n}\left(\overline{T}_i+\overline{K}_i\Delta\ell_i\right)\left(\frac{a_i+b_i\Delta x+\alpha_i\Delta y+\beta_i\Delta\psi}{\overline{\ell}_i+\Delta\ell_i}\right)\ , \qquad (4.5)
$$

where:

$$
\begin{aligned}
f&=\left(m-X_{\dot{u}}\right)\cos\overline{\psi}\Delta\ddot{x}-\left(\frac{\overline{\partial X}}{\partial u}\cos\overline{\psi}-\frac{\overline{\partial X}}{\partial v}\sin\overline{\psi}\right)\Delta\dot{x}+\left(m-X_{\dot{u}}\right)\sin\overline{\psi}\Delta\ddot{y} \\
&\quad-\left(\frac{\overline{\partial X}}{\partial u}\sin\overline{\psi}+\frac{\overline{\partial X}}{\partial v}\cos\overline{\psi}\right)\Delta\dot{y}-\left(X_{\dot{u}}\overline{v}+\frac{\overline{\partial X}}{\partial r}\right)\Delta\dot{\psi}-\left(\frac{\overline{\partial X}}{\partial u}\overline{v}-\frac{\overline{\partial X}}{\partial v}\overline{u}\right)\Delta\psi\ , \\
\overline{Z}&=\overline{X}\ , \\
\overline{T}_i&=\overline{T}^{(i)}\ , \\
\overline{K}_i&=\frac{\overline{dT}^{(i)}}{d\ell^{(i)}}\ , \\
a_i&=-\left[\left(\overline{x}-x_m^{(i)}\right)\cos\overline{\psi}+\left(\overline{y}-y_m^{(i)}\right)\sin\overline{\psi}+x_p^{(i)}\right]=\overline{\ell}^{(i)}\cos\overline{\omega}^{(i)}\ , \\
b_i&=-\cos\overline{\psi}\ , \\
\alpha_i&=-\sin\overline{\psi}\ ,
\end{aligned}
$$

$$\beta_i = \left(\bar{x} - x_m^{(i)}\right)\sin\bar{\psi} - \left(\bar{y} - y_m^{(i)}\right)\cos\bar{\psi} = -\bar{\ell}^{(i)}\sin\bar{\omega} + y_p^{(i)} \ .$$

The expansion of an equation of the form (4.5) is shown in Appendix 6.

After substituting the relations involved in (4.2) from Appendices 1-5, the surge equation of motion becomes:

$$\begin{aligned}
&(m - X_{\dot{u}})\cos\bar{\psi}\Delta\ddot{x} - \left(\frac{\overline{\partial X}}{\partial u}\cos\bar{\psi} - \frac{\overline{\partial X}}{\partial v}\sin\bar{\psi}\right)\Delta\dot{x} + (m - X_{\dot{u}})\sin\bar{\psi}\Delta\ddot{y} - \left[\frac{\overline{\partial X}}{\partial u}\sin\bar{\psi} + \frac{\overline{\partial X}}{\partial v}\cos\bar{\psi}\right]\Delta\dot{y} \\
&-\left(X_{\dot{u}}\bar{v} + \frac{\overline{\partial X}}{\partial r}\right)\Delta\dot{\psi} - \left(\frac{\overline{\partial X}}{\partial u}\bar{v} - \frac{\overline{\partial X}}{\partial v}\bar{u}\right)\Delta\psi = \bar{X} + \sum_{i=1}^{n}\left\{\bar{T}^{(i)}\cos\bar{\omega}^{(i)}\right\} \\
&-\bar{X}\sum_{i=1}^{n}\left\{\frac{\cos\bar{\gamma}^{(i)}}{\bar{\ell}^{(i)}}\right\}\Delta x - \sum_{i=1}^{n}\left\{\frac{\bar{T}^{(i)}}{\bar{\ell}^{(i)}}\cos\bar{\psi}\right\}\Delta x + \sum_{i=1}^{n}\left\{\bar{T}^{(i)}\cos\bar{\omega}^{(i)}\sum_{k=1}^{n}\left(-\frac{\cos\bar{\gamma}^{(k)}}{\bar{\ell}^{(k)}}\right)\right\}\Delta x \\
&+\sum_{i=1}^{n}\left\{\frac{\bar{T}^{(i)}}{\bar{\ell}^{(i)}}\cos\bar{\omega}^{(i)}\cos\bar{\gamma}^{(i)}\right\}\Delta x - \sum_{i=1}^{n}\left\{\frac{\overline{dT}^{(i)}}{d\ell^{(i)}}\cos\bar{\omega}^{(i)}\cos\bar{\gamma}^{(i)}\right\}\Delta x \\
&-\bar{X}\sum_{i=1}^{n}\left\{\frac{\sin\bar{\gamma}^{(i)}}{\bar{\ell}^{(i)}}\right\}\Delta y - \sum_{i=1}^{n}\left\{\frac{\bar{T}^{(i)}}{\bar{\ell}^{(i)}}\sin\bar{\psi}\right\}\Delta y + \sum_{i=1}^{n}\left\{\bar{T}^{(i)}\cos\bar{\omega}^{(i)}\sum_{k=1}^{n}\left(-\frac{\sin\bar{\gamma}^{(k)}}{\bar{\ell}^{(k)}}\right)\right\}\Delta y \\
&+\sum_{i=1}^{n}\left\{\frac{\bar{T}^{(i)}}{\bar{\ell}^{(i)}}\cos\bar{\omega}^{(i)}\sin\bar{\gamma}^{(i)}\right\}\Delta y - \sum_{i=1}^{n}\left\{\frac{\overline{dT}^{(i)}}{\overline{d\ell}^{(i)}}\cos\bar{\omega}^{(i)}\sin\bar{\gamma}^{(i)}\right\}\Delta y \\
&+\bar{X}\sum_{i=1}^{n}\left\{\frac{x_p^{(i)}\sin\bar{\omega}^{(i)} + y_p^{(i)}\cos\bar{\omega}^{(i)}}{\bar{\ell}^{(i)}}\right\}\Delta\psi - \sum_{i=1}^{n}\left\{\bar{T}^{(i)}\left(\sin\bar{\omega}^{(i)} - \frac{y_p^{(i)}}{\bar{\ell}^{(i)}}\right)\right\}\Delta\psi \\
&+\sum_{i=1}^{n}\left\{\bar{T}^{(i)}\cos\bar{\omega}^{(i)}\sum_{k=1}^{n}\left(\frac{x_p^{(k)}\sin\bar{\omega}^{(k)} + y_p^{(k)}\cos\bar{\omega}^{(k)}}{\bar{\ell}^{(k)}}\right)\right\}\Delta\psi \\
&-\sum_{i=1}^{n}\left\{\frac{\bar{T}^{(i)}}{\bar{\ell}^{(i)}}\cos\bar{\omega}^{(i)}\left(x_p^{(i)}\sin\bar{\omega}^{(i)} + y_p^{(i)}\cos\bar{\omega}^{(i)}\right)\right\}\Delta\psi \\
&+\sum_{i=1}^{n}\left\{\frac{\overline{dT}^{(i)}}{d\ell^{(i)}}\cos\bar{\omega}^{(i)}\left(x_p^{(i)}\sin\bar{\omega}^{(i)} + y_p^{(i)}\cos\bar{\omega}^{(i)}\right)\right\}\Delta\psi \ . \qquad (4.6)
\end{aligned}$$

Further, noticing that $\bar{X} + \sum_{i=1}^{n}\left\{\bar{T}^{(i)}\cos\bar{\omega}^{(i)}\right\} = 0$ (equilibrium), the surge equation of motion can be simplified to the form (A6.9) as

$$
\begin{aligned}
&\left(m - X_{\dot{u}}\right)\cos\overline{\psi}\Delta\ddot{x} + \left(\frac{\overline{\partial X}}{\partial v}\sin\overline{\psi} - \frac{\overline{\partial X}}{\partial u}\cos\overline{\psi}\right)\Delta\dot{x} + E_{1x}\ \Delta x \\
&+ \left(m - X_{\dot{u}}\right)\sin\overline{\psi}\Delta\ddot{y} - \left(\frac{\overline{\partial X}}{\partial v}\cos\overline{\psi} + \frac{\overline{\partial X}}{\partial u}\sin\overline{\psi}\right)\Delta\dot{y} + E_{1y}\ \Delta y \\
&- \left(X_{\dot{u}} + \frac{\overline{\partial X}}{\partial r}\right)\Delta\dot{\psi} + E_{1\psi}\ \Delta\psi = 0\ , \qquad (4.7)
\end{aligned}
$$

where

$$
\begin{aligned}
E_{1x} &= \sum_{i=1}^{n}\left\{\frac{\overline{T}^{(i)}}{\overline{\ell}^{(i)}}\left(\cos\overline{\psi} - \cos\overline{\omega}^{(i)}\cos\overline{\gamma}^{(i)}\right)\right\} + \sum_{i=1}^{n}\left\{\frac{\overline{dT}^{(i)}}{d\ell^{(i)}}\cos\overline{\omega}^{(i)}\cos\overline{\gamma}^{(i)}\right\} \\
&= \sum_{i=1}^{n}\left\{\frac{\overline{T}^{(i)}}{\overline{\ell}^{(i)}}\sin\overline{\gamma}^{(i)}\sin(\overline{\gamma}^{(i)} - \overline{\psi})\right\} + \sum_{i=1}^{n}\left\{\frac{\overline{dT}^{(i)}}{d\ell^{(i)}}\cos\overline{\gamma}^{(i)}\cos(\overline{\gamma}^{(i)} - \overline{\psi})\right\}\ , \qquad (4.8)
\end{aligned}
$$

$$
\begin{aligned}
E_{1y} &= \sum_{i=1}^{n}\left\{\frac{\overline{T}^{(i)}}{\overline{\ell}^{(i)}}\left(\sin\overline{\psi} - \sin\overline{\gamma}^{(i)}\cos\overline{\omega}^{(i)}\right)\right\} + \sum_{i=1}^{n}\left\{\frac{\overline{dT}^{(i)}}{d\ell^{(i)}}\sin\overline{\gamma}^{(i)}\cos\overline{\omega}^{(i)}\right\} \\
&= \sum_{i=1}^{n}\left\{\frac{\overline{T}^{(i)}}{\overline{\ell}^{(i)}}\cos\overline{\gamma}^{(i)}\sin(\overline{\gamma}^{(i)} - \overline{\psi})\right\} + \sum_{i=1}^{n}\left\{\frac{\overline{dT}^{(i)}}{d\ell^{(i)}}\sin\overline{\gamma}^{(i)}\cos(\overline{\gamma}^{(i)} - \overline{\psi})\right\}\ , \qquad (4.9)
\end{aligned}
$$

$$
\begin{aligned}
E_{1\psi} &= \left(\frac{\overline{\partial X}}{\partial v}\overline{u} - \frac{\overline{\partial X}}{\partial u}\overline{v}\right) + \sum_{i=1}^{n}\left\{\overline{T}\sin\overline{\omega}^{(i)}\right\} + \sum_{i=1}^{n}\left\{\frac{\overline{T}^{(i)}}{\overline{\ell}^{(i)}}\left[\cos\overline{\omega}\left(x_p^{(i)}\sin\overline{\omega}^{(i)} + y_p^{(i)}\cos\overline{\omega}^{(i)}\right) - y_p^{(i)}\right]\right\} \\
&\quad - \sum_{i=1}^{n}\left\{\frac{\overline{dT}^{(i)}}{d\ell}\cos\overline{\omega}^{(i)}\left(x_p^{(i)}\sin\overline{\omega}^{(i)} + y_p{}^{(i)}\cos\overline{\omega}^{(i)}\right)\right\} \\
&= \left(\frac{\overline{\partial X}}{\partial v}\overline{u} - \frac{\overline{\partial X}}{\partial u}\overline{v}\right) - \sum_{i=1}^{n}\left\{\overline{T}^{(i)}\sin(\overline{\gamma}^{(i)} - \overline{\psi})\right\} \\
&\quad - \sum_{i=1}^{n}\left\{\frac{\overline{T}^{(i)}}{\overline{\ell}^{(i)}}\sin(\overline{\gamma}^{(i)} - \overline{\psi})\left[x_p^{(i)}\cos(\overline{\gamma}^{(i)} - \overline{\psi}) + y_p^{(i)}\sin(\overline{\gamma}^{(i)} - \overline{\psi})\right]\right\} \\
&\quad + \sum_{i=1}^{n}\left\{\frac{\overline{dT}^{(i)}}{d\ell^{(i)}}\cos(\overline{\gamma}^{(i)} - \overline{\psi})\left[x_p^{(i)}\sin(\overline{\gamma}^{(i)} - \overline{\psi}) - y_p^{(i)}\cos(\overline{\gamma}^{(i)} - \overline{\psi})\right]\right\}\ . \qquad (4.10)
\end{aligned}
$$

4.1.2. Expansion of the Sway Equation of Motion

The sway equation of motion (4.3) is of the form (4.5), where

$$f = -\left(m - Y_{\dot{v}}\right)\sin\overline{\psi}\Delta\ddot{x} - \left(\frac{\overline{\partial Y}}{\partial u}\cos\overline{\psi} - \frac{\overline{\partial Y}}{\partial v}\sin\overline{\psi}\right)\Delta\dot{x} + \left(m - Y_{\dot{v}}\right)\cos\overline{\psi}\,\Delta\ddot{y}$$
$$-\left(\frac{\overline{\partial Y}}{\partial u}\sin\overline{\psi} + \frac{\overline{\partial Y}}{\partial v}\cos\overline{\psi}\right)\Delta\dot{y} - Y_{\dot{r}}\Delta\ddot{\psi} + \left(Y_{\dot{v}}\overline{u} - \frac{\overline{\partial Y}}{\partial r}\right)\Delta\dot{\psi} - \left(\frac{\overline{\partial Y}}{\partial u}\overline{v} - \frac{\overline{\partial Y}}{\partial v}\overline{u}\right)\Delta\psi\ ,$$

$\overline{Z} = \overline{Y}$,

$\overline{T}_i$ and $\overline{K}_i$ are defined as previously ,

$a_i = \left(\overline{x} - x_m^{(i)}\right)\sin\overline{\psi} - \left(\overline{y} - y_m^{(i)}\right)\cos\overline{\psi} - y_p^{(i)} = -\overline{\ell}^{(i)}\sin\overline{\omega}^{(i)}$,

$b_i = \sin\overline{\psi}$,

$\alpha_i = -\cos\overline{\psi}$,

$\beta_i = \left(\overline{x} - x_m^{(i)}\right)\cos\overline{\psi} + \left(\overline{y} - y_m^{(i)}\right)\sin\overline{\psi} = -\overline{\ell}^{(i)}\cos\overline{\omega}^{(i)} - x_p^{(i)}$.

Following the procedure of Appendix 6, and substituting the relations of Appendixes 1-5, the sway equation of motion (4.3) can be further expanded as:

$$-\left(m - Y_{\dot{v}}\right)\sin\overline{\psi}\Delta\ddot{x} - \left(\frac{\overline{\partial Y}}{\partial u}\cos\overline{\psi} - \frac{\overline{\partial Y}}{\partial v}\sin\psi\right)\Delta\dot{x} + \left(m - Y_{\dot{v}}\right)\cos\overline{\psi}\Delta\ddot{y}$$
$$-\left(\frac{\overline{\partial Y}}{\partial u}\sin\overline{\psi} + \frac{\overline{\partial Y}}{\partial v}\cos\overline{\psi}\right)\Delta\dot{y} - Y_{\dot{r}}\Delta\ddot{\psi} + \left(Y_{\dot{v}}\overline{u} - \frac{\overline{\partial Y}}{\partial r}\right)\Delta\dot{\psi}$$
$$-\left(\frac{\overline{\partial Y}}{\partial u}\overline{v} - \frac{\overline{\partial Y}}{\partial v}\overline{u}\right)\Delta\psi = \overline{Y} - \sum_{i=1}^{n}\left\{\overline{T}^{(i)}\sin\overline{\omega}^{(i)}\right\} - \overline{Y}\sum_{i=1}^{n}\left\{\frac{\cos\overline{\gamma}^{(i)}}{\overline{\ell}^{(i)}}\right\}\Delta x + \sum_{i=1}^{n}\left\{\frac{\overline{T}^{(i)}}{\overline{\ell}^{(i)}}\sin\overline{\psi}\right\}\Delta x$$
$$-\sum_{i=1}^{n}\left\{\overline{T}^{(i)}\sin\overline{\omega}^{(i)}\sum_{k=1}^{n}\left(-\frac{\cos\overline{\gamma}^{(k)}}{\overline{\ell}^{(k)}}\right)\right\}\Delta x - \sum_{i=1}^{n}\left\{\frac{\overline{T}^{(i)}}{\overline{\ell}^{(i)}}\sin\overline{\omega}^{(i)}\cos\overline{\gamma}^{(i)}\right\}\Delta x$$
$$+\sum_{i=1}^{n}\left\{\frac{d\overline{T}^{(i)}}{d\ell^{(i)}}\sin\overline{\omega}^{(i)}\cos\overline{\gamma}^{(i)}\right\}\Delta x - \overline{Y}\sum_{i=1}^{n}\left\{\frac{\sin\overline{\gamma}^{(i)}}{\overline{\ell}^{(i)}}\right\}\Delta y$$
$$-\sum_{i=1}^{n}\left\{\frac{\overline{T}^{(i)}}{\overline{\ell}^{(i)}}\cos\overline{\psi}\right\}\Delta y - \sum_{i=1}^{n}\left\{\overline{T}^{(i)}\sin\overline{\omega}^{(i)}\sum_{k=1}^{n}\left(-\frac{\sin\overline{\gamma}^{(k)}}{\overline{\ell}^{(k)}}\right)\right\}\Delta y$$
$$-\sum_{i=1}^{n}\left\{\frac{\overline{T}^{(i)}}{\overline{\ell}^{(i)}}\sin\overline{\omega}^{(i)}\sin\overline{\gamma}^{(i)}\right\}\Delta y + \sum_{i=1}^{n}\left\{\frac{d\overline{T}^{(i)}}{d\ell^{(i)}}\sin\overline{\omega}^{(i)}\sin\overline{\gamma}^{(i)}\right\}\Delta y$$

$$+\overline{Y}\sum_{i=1}^{n}\left\{\frac{x_p^{(i)}\sin\overline{\omega}^{(i)}+y_p^{(i)}\cos\overline{\omega}^{(i)}}{\overline{\ell}^{(i)}}\right\}\Delta\psi-\sum_{i=1}^{n}\left\{\overline{T}^{(i)}\left(\cos\overline{\omega}^{(i)}+\frac{x_p^{(i)}}{\overline{\ell}^{(i)}}\right)\right\}\Delta\psi$$

$$-\sum_{i=1}^{n}\left\{\overline{T}^{(i)}\sin\overline{\omega}^{(i)}\sum_{k=1}^{n}\left(\frac{x_p^{(k)}\sin\overline{\omega}^{(k)}+y_p^{(k)}\cos\overline{\omega}^{(k)}}{\overline{\ell}^{(k)}}\right)\right\}\Delta\psi$$

$$+\sum_{i=1}^{n}\left\{\frac{\overline{T}^{(i)}}{\overline{\ell}^{(i)}}\sin\overline{\omega}^{(i)}\left(x_p^{(i)}\sin\overline{\omega}^{(i)}+y_p^{(i)}\cos\overline{\omega}^{(i)}\right)\right\}\Delta\psi$$

$$-\sum_{i=1}^{n}\left\{\frac{\overline{dT}^{(i)}}{d\ell^{(i)}}\sin\overline{\omega}^{(i)}\left(x_p^{(i)}\sin\overline{\omega}^{(i)}+y_p^{(i)}\cos\overline{\omega}^{(i)}\right)\right\}\Delta\psi\ . \tag{4.11}$$

Noticing that the term $\overline{Y}-\sum_{i=1}^{n}\left\{\overline{T}^{(i)}\sin\overline{\omega}^{(i)}\right\}=0$ (equilibrium condition), the sway equation of motion can be simplified to the form (A6.9):

$$\boxed{\begin{aligned}&-\left(m-Y_{\dot{v}}\right)\sin\overline{\psi}\Delta\ddot{x}+\left(\frac{\overline{\partial Y}}{\partial v}\sin\overline{\psi}-\frac{\overline{\partial Y}}{\partial u}\cos\overline{\psi}\right)\Delta\dot{x}+E_{2x}\Delta x\\&+\left(m-Y_{\dot{v}}\right)\cos\overline{\psi}\Delta\ddot{y}-\left(\frac{\overline{\partial Y}}{\partial v}\cos\overline{\psi}-\frac{\overline{\partial Y}}{\partial u}\sin\overline{\psi}\right)\Delta\dot{y}+E_{2y}\Delta y\\&-Y_{\dot{r}}\,\Delta\ddot{\psi}+\left(Y_{\dot{v}}\overline{u}-\frac{\overline{\partial Y}}{\partial r}\right)\Delta\dot{\psi}+E_{2\psi}\,\Delta\psi=0\ ,\end{aligned}} \tag{4.12}$$

where

$$\boxed{\begin{aligned}E_{2x}&=\sum_{i=1}^{n}\left\{\frac{\overline{T}^{(i)}}{\overline{\ell}^{(i)}}\left(\cos\overline{\gamma}^{(i)}\sin\overline{\omega}^{(i)}-\sin\overline{\psi}\right)\right\}-\sum_{i=1}^{n}\left\{\frac{\overline{dT}^{(i)}}{d\ell^{(i)}}\cos\overline{\gamma}^{(i)}\sin\overline{\omega}^{(i)}\right\}\\&=-\sum_{i=1}^{n}\left\{\frac{\overline{T}^{(i)}}{\overline{\ell}^{(i)}}\sin\overline{\gamma}^{(i)}\cos(\overline{\gamma}^{(i)}-\overline{\psi})\right\}+\sum_{i=1}^{n}\left\{\frac{\overline{dT}^{(i)}}{d\ell^{(i)}}\cos\overline{\gamma}^{(i)}\sin(\overline{\gamma}^{(i)}-\overline{\psi})\right\}\ ,\end{aligned}} \tag{4.13}$$

$$\boxed{\begin{aligned}E_{2y}&=\sum_{i=1}^{n}\left\{\frac{\overline{T}^{(i)}}{\overline{\ell}^{(i)}}\left(\cos\overline{\psi}^{(i)}+\sin\overline{\gamma}^{(i)}\sin\overline{\omega}^{(i)}\right)\right\}-\sum_{i=1}^{n}\left\{\frac{\overline{dT}^{(i)}}{d\ell^{(i)}}\sin\overline{\gamma}^{(i)}\sin\overline{\omega}^{(i)}\right\}\\&=-\sum_{i=1}^{n}\left\{\frac{\overline{T}^{(i)}}{\overline{\ell}^{(i)}}\cos\overline{\gamma}^{(i)}\cos(\overline{\gamma}^{(i)}-\overline{\psi})\right\}+\sum_{i=1}^{n}\left\{\frac{\overline{dT}^{(i)}}{d\ell^{(i)}}\sin\overline{\gamma}^{(i)}\sin(\overline{\gamma}^{(i)}-\overline{\psi})\right\}\ ,\end{aligned}} \tag{4.14}$$

$$
\begin{aligned}
E_{2\psi} &= \left(\frac{\overline{\partial Y}}{\partial v}\bar{u} - \frac{\overline{\partial Y}}{\partial u}\bar{v}\right) + \sum_{i=1}^{n}\left\{\bar{T}^{(i)}\cos\bar{\varpi}^{(i)}\right\} \\
&\quad + \sum_{i=1}^{n}\left\{\frac{\bar{T}^{(i)}}{\bar{\ell}^{(i)}}\left[x_p^{(i)} - \sin\bar{\varpi}^{(i)}\left(x_p^{(i)}\sin\bar{\varpi}^{(i)} + y_p^{(i)}\cos\bar{\varpi}^{(i)}\right)\right]\right\} \\
&\quad + \sum_{i=1}^{n}\left\{\frac{\overline{dT}^{(i)}}{d\ell^{(i)}}\sin\bar{\varpi}^{(i)}\left(x_p^{(i)}\sin\bar{\varpi}^{(i)} + y_p^{(i)}\cos\bar{\varpi}^{(i)}\right)\right\} \\
&= \left(\frac{\overline{\partial Y}}{\partial v}\bar{u} - \frac{\overline{\partial Y}}{\partial u}\bar{v}\right) + \sum_{i=1}^{n}\left\{\bar{T}^{(i)}\cos(\bar{\gamma}^{(i)} - \bar{\psi})\right\} \\
&\quad + \sum_{i=1}^{n}\left\{\frac{\bar{T}^{(i)}}{\bar{\ell}^{(i)}}\cos(\bar{\gamma}^{(i)} - \bar{\psi})\left[x_p^{(i)}\cos(\bar{\gamma}^{(i)} - \bar{\psi}) + y_p^{(i)}\sin(\bar{\gamma}^{(i)} - \bar{\psi})\right]\right\} \\
&\quad + \sum_{i=1}^{n}\left\{\frac{\overline{dT}^{(i)}}{d\ell^{(i)}}\sin(\bar{\gamma}^{(i)} - \bar{\psi})\left[x_p^{(i)}\sin(\bar{\gamma}^{(i)} - \bar{\psi}) - y_p^{(i)}\cos(\bar{\gamma}^{(i)} - \bar{\psi})\right]\right\} ,
\end{aligned}
\tag{4.15}
$$

4.1.3. <u>Expansion of the Yaw Equation of Motion</u>

The yaw equation of motion (4.4) is of the form (4.5), where

$$
\begin{aligned}
f &= N_{\dot{v}}\sin\bar{\psi}\Delta\ddot{x} - \left(\frac{\overline{\partial N}}{\partial u}\cos\bar{\psi} - \frac{\overline{\partial N}}{\partial v}\sin\bar{\psi}\right)\Delta\dot{x} - N_{\dot{v}}\cos\bar{\psi}\Delta\ddot{y} \\
&\quad - \left(\frac{\overline{\partial N}}{\partial u}\sin\bar{\psi} + \frac{\overline{\partial N}}{\partial v}\cos\bar{\psi}\right)\Delta\dot{y} + \left(I_z - N_{\dot{r}}\right)\Delta\ddot{\psi} + \left(N_{\dot{v}}\bar{u} - \frac{\partial\overline{N}}{\partial r}\right)\Delta\dot{\psi} - \left(\frac{\overline{\partial N}}{\partial u}\bar{v} + \frac{\overline{\partial N}}{\partial v}\bar{u}\right)\Delta\psi ,
\end{aligned}
$$

$\bar{Z} = \bar{N}$,

$\bar{T}_i$ and $\bar{K}_i$ are defined as previously ,

$$
\begin{aligned}
a_i &= \left[\left(\bar{x} - x_m^{(i)}\right)\left(x_p^{(i)}\sin\bar{\psi} + y_p^{(i)}\cos\bar{\psi}\right) - \left(\bar{y} - y_m^{(i)}\right)\left(x_p^{(i)}\cos\bar{\psi} - y_p^{(i)}\sin\psi\right)\right] \\
&= -\bar{\ell}^{(i)}\left[x_p^{(i)}\sin\bar{\varpi}^{(i)} + y_p^{(i)}\cos\bar{\varpi}^{(i)}\right] ,
\end{aligned}
$$

$$b_i = x_p^{(i)}\sin\bar{\psi} + y_p^{(i)}\cos\bar{\psi} ,$$

$$\alpha_i = -\left[x_p^{(i)}\cos\bar{\psi} - y_p^{(i)}\sin\bar{\psi}\right] ,$$

$$
\begin{aligned}
\beta_i &= \left(\bar{x} - x_m^{(i)}\right)\left(x_p^{(i)}\cos\bar{\psi} - y_p^{(i)}\sin\bar{\psi}\right) + \left(\bar{y} - y_m^{(i)}\right)\left(x_p^{(i)}\sin\bar{\psi} + y_p^{(i)}\cos\bar{\psi}\right) \\
&= -\bar{\ell}^{(i)}\left[x_p^{(i)}\cos\bar{\varpi}^{(i)} - y_p^{(i)}\sin\bar{\varpi}^{(i)}\right] - \left(x_p^{(i)2} + y_p^{(i)2}\right) .
\end{aligned}
$$

Following the expansion in Appendix 6, and substituting the relations of Appendixes 1-5, the yaw equation of motion becomes:

$$
\begin{aligned}
& N_{\dot{v}} \sin\overline{\psi}\Delta\ddot{x} - \left(\frac{\overline{\partial N}}{\partial u}\cos\overline{\psi} - \frac{\overline{\partial N}}{\partial v}\sin\overline{\psi}\right)\Delta\dot{x} - N_{\dot{v}}\cos\overline{\psi}\Delta\ddot{y} - \left(\frac{\overline{\partial N}}{\partial u}\sin\overline{\psi} + \frac{\overline{\partial N}}{\partial v}\cos\overline{\psi}\right)\Delta\dot{y} \\
& +\left(I_z - N_{\dot{r}}\right)\Delta\ddot{\psi} + \left(N_{\dot{v}}\overline{u} - \frac{\overline{\partial N}}{\partial r}\right)\Delta\dot{\psi} - \left(\frac{\overline{\partial N}}{\partial u}\overline{v} - \frac{\overline{\partial N}}{\partial v}\overline{u}\right)\Delta\psi = \overline{N} \\
& -\sum_{i=1}^{n}\left\{\overline{T}^{(i)}\left(x_p^{(i)}\sin\overline{\omega}^{(i)} + y_p^{(i)}\cos\overline{\omega}^{(i)}\right)\right\} - \overline{N}\sum_{n=1}^{n}\left\{\frac{\cos\overline{\gamma}^{(i)}}{\overline{\ell}^{(i)}}\right\}\Delta x \\
& +\sum_{i=1}^{n}\left\{\frac{\overline{T}^{(i)}}{\overline{\ell}^{(i)}}\left(x_p^{(i)}\sin\overline{\psi} + y_p^{(i)}\cos\overline{\psi}\right)\right\}\Delta x + \sum_{i=1}^{n}\left\{\overline{T}^{(i)}\left(x_p^{(i)}\sin\overline{\omega}^{(i)} + y_p^{(i)}\cos\overline{\omega}^{(i)}\right)\sum_{k=1}^{n}\left(\frac{\cos\overline{\gamma}^{(k)}}{\overline{\ell}^{(k)}}\right)\right\}\Delta x \\
& -\sum_{i=1}^{n}\left\{\frac{\overline{T}^{(i)}}{\overline{\ell}^{(i)}}\left(x_p^{(i)}\sin\overline{\omega}^{(i)} + y_p^{(i)}\cos\overline{\omega}^{(i)}\right)\cos\overline{\gamma}^{(i)}\right\}\Delta x \\
& +\sum_{i=1}^{n}\left\{\frac{\overline{dT}^{(i)}}{d\ell^{(i)}}\left(x_p^{(i)}\sin\overline{\omega}^{(i)} + y_p^{(i)}\cos\overline{\omega}^{(i)}\right)\cos\overline{\gamma}^{(i)}\right\}\Delta x - \overline{N}\sum_{i=1}^{n}\left\{\frac{\sin\overline{\gamma}^{(i)}}{\overline{\ell}^{(i)}}\right\}\Delta y \\
& -\sum_{i=1}^{n}\left\{\frac{\overline{T}^{(i)}}{\overline{\ell}^{(i)}}\left(x_p^{(i)}\cos\overline{\psi} - y_p^{(i)}\sin\overline{\psi}\right)\right\}\Delta y + \sum_{i=1}^{n}\left\{\overline{T}^{(i)}\left(x_p^{(i)}\sin\overline{\omega}^{(i)} + y_p^{(i)}\cos\overline{\omega}^{(i)}\right)\sum_{k=1}^{n}\left(\frac{\sin\overline{\gamma}^{(k)}}{\overline{\ell}^{(k)}}\right)\right\}\Delta y \\
& -\sum_{i=1}^{n}\left\{\frac{\overline{T}^{(i)}}{\overline{\ell}^{(i)}}\left(x_p^{(i)}\sin\overline{\omega}^{(i)} + y_p^{(i)}\cos\overline{\omega}^{(i)}\right)\sin\overline{\gamma}^{(i)}\right\}\Delta y \\
& +\sum_{i=1}^{n}\left\{\frac{\overline{dT}^{(i)}}{d\ell^{(i)}}\left(x_p^{(i)}\sin\overline{\omega}^{(i)} + y_p^{(i)}\cos\overline{\omega}^{(i)}\right)\sin\overline{\gamma}^{(i)}\right\}\Delta y + \overline{N}\sum_{i=1}^{n}\left\{\frac{x_p^{(i)}\sin\overline{\omega} + y_p^{(i)}\cos\overline{\omega}^{(i)}}{\overline{\ell}^{(i)}}\right\}\Delta\psi \\
& -\sum_{i=1}^{n}\left\{\overline{T}^{(i)}\left[x_p^{(i)}\cos\overline{\omega}^{(i)} - y_p^{(i)}\sin\overline{\omega}^{(i)} + \left(\frac{x_p^{(i)2} + y_p^{(i)2}}{\overline{\ell}^{(i)}}\right)\right]\right\}\Delta\psi \\
& -\sum_{i=1}^{n}\left\{\overline{T}^{(i)}\left(x_p^{(i)}\sin\overline{\omega}^{(i)} + y_p^{(i)}\cos\overline{\omega}^{(i)}\right)\sum_{k=1}^{n}\left(\frac{x_p^{(k)}\sin\overline{\omega}^{(k)} + y_p^{(k)}\cos\overline{\omega}^{(k)}}{\overline{\ell}^{(k)}}\right)\right\}\Delta\psi \\
& +\sum_{i=1}^{n}\left\{\frac{\overline{T}^{(i)}}{\overline{\ell}^{(i)}}\left(x_p^{(i)}\sin\overline{\omega}^{(i)} + y_p^{(i)}\cos\overline{\omega}^{(i)}\right)^2\right\}\Delta\psi \\
& -\sum_{i=1}^{n}\left\{\frac{\overline{dT}^{(i)}}{d\ell^{(i)}}\left(x_p^{(i)}\sin\overline{\omega}^{(i)} + y_p^{(i)}\cos\overline{\omega}^{(i)}\right)^2\right\}\Delta\psi \ . \qquad (4.16)
\end{aligned}
$$

Noticing that $\overline{N} - \sum_{i=1}^{n}\left\{\overline{T}^{(i)}\left(x_p^{(i)}\sin\overline{\omega}^{(i)} + y_p^{(i)}\cos\overline{\omega}^{(i)}\right)\right\} = 0$ (equilibrium), the yaw equation of motion can be further reduced to the form (A6.9):

$$
\begin{aligned}
& N_{\dot{v}} \sin\overline{\psi}\ \Delta\ddot{x} + \left(\frac{\overline{\partial N}}{\partial v}\sin\overline{\psi} - \frac{\overline{\partial N}}{\partial u}\cos\overline{\psi}\right)\Delta\dot{x} + E_{3x}\ \Delta x \\
& -N_{\dot{v}} \cos\overline{\psi}\ \Delta\ddot{y} - \left(\frac{\overline{\partial N}}{\partial v}\cos\overline{\psi} + \frac{\overline{\partial N}}{\partial u}\sin\overline{\psi}\right)\Delta\dot{y} + E_{3y}\ \Delta y \\
& +\left(I_z - N_{\dot{r}}\right)\Delta\ddot{\psi} + \left(N_{\dot{v}}\overline{u} - \frac{\overline{\partial N}}{\partial r}\right)\Delta\dot{\psi} + E_{3\psi}\ \Delta\psi = 0\ , \qquad (4.17)
\end{aligned}
$$

with

$$
\begin{aligned}
E_{3x} = & \sum_{i=1}^{n}\left\{\frac{\overline{T}^{(i)}}{\overline{\ell}^{(i)}}\left[\cos\overline{\gamma}^{(i)}\left(x_p^{(i)}\sin\overline{\omega}^{(i)} + y_p^{(i)}\cos\overline{\omega}^{(i)}\right) - \left(x_p^{(i)}\sin\overline{\psi} + y_p^{(i)}\cos\overline{\psi}\right)\right]\right\} \\
& -\sum_{i=1}^{n}\left\{\frac{\overline{dT}^{(i)}}{d\ell^{(i)}}\cos\overline{\gamma}^{(i)}\left(x_p^{(i)}\sin\overline{\omega}^{(i)} + y_p^{(i)}\cos\overline{\omega}^{(i)}\right)\right\} \\
= & -\sum_{i=1}^{n}\left\{\frac{\overline{T}^{(i)}}{\overline{\ell}^{(i)}}\sin\overline{\gamma}^{(i)}\left[\left(x_p^{(i)}\sin\overline{\psi} + y_p^{(i)}\cos\overline{\psi}\right)\sin\overline{\gamma}^{(i)} + \left(x_p^{(i)}\cos\overline{\psi} - y_p^{(i)}\sin\overline{\psi}\right)\cos\overline{\gamma}^{(i)}\right]\right\} \\
& -\sum_{i=1}^{n}\left\{\frac{\overline{dT}^{(i)}}{d\ell^{(i)}}\cos\overline{\gamma}^{(i)}\left[\left(x_p^{(i)}\sin\overline{\psi} + y_p^{(i)}\cos\overline{\psi}\right)\cos\overline{\gamma}^{(i)}\right]\right\} \\
& +\sum_{i=1}^{n}\left\{\frac{\overline{dT}^{(i)}}{d\ell^{(i)}}\cos\overline{\gamma}^{(i)}\left[\left(x_p^{(i)}\cos\overline{\psi} - y_p^{(i)}\sin\overline{\psi}\right)\sin\overline{\gamma}^{(i)}\right]\right\}, \qquad (4.18)
\end{aligned}
$$

$$
\begin{aligned}
E_{3y} = & \sum_{i=1}^{n}\left\{\frac{\overline{T}^{(i)}}{\overline{\ell}^{(i)}}\left[\sin\overline{\gamma}^{(i)}\left(x_p^{(i)}\sin\overline{\omega}^{(i)} + y_p^{(i)}\cos\overline{\omega}^{(i)}\right) + \left(x_p^{(i)}\cos\overline{\psi} - y_p^{(i)}\sin\overline{\psi}\right)\right]\right\} \\
& -\sum_{i=1}^{n}\left\{\frac{\overline{dT}^{(i)}}{d\ell^{(i)}}\sin\overline{\gamma}^{(i)}\left(x_p^{(i)}\sin\overline{\omega}^{(i)} + y_p^{(i)}\cos\overline{\omega}^{(i)}\right)\right\} \\
= & \sum_{i=1}^{n}\left\{\frac{\overline{T}^{(i)}}{\overline{\ell}^{(i)}}\cos\overline{\gamma}^{(i)}\left[\left(x_p^{(i)}\sin\overline{\psi} + y_p^{(i)}\cos\overline{\psi}\right)\sin\overline{\gamma}^{(i)} + \left(x_p^{(i)}\cos\overline{\psi} - y_p^{(i)}\sin\overline{\psi}\right)\cos\overline{\gamma}^{(i)}\right]\right\} \\
& -\sum_{i=1}^{n}\left\{\frac{\overline{dT}^{(i)}}{d\ell^{(i)}}\sin\overline{\gamma}^{(i)}\left[\left(x_p^{(i)}\sin\overline{\psi} + y_p^{(i)}\cos\overline{\psi}\right)\cos\overline{\gamma}^{(i)}\right]\right\} \\
& +\sum_{i=1}^{n}\left\{\frac{\overline{dT}^{(i)}}{d\ell^{(i)}}\sin\overline{\gamma}^{(i)}\left[\left(x_p^{(i)}\cos\overline{\psi} - y_p^{(i)}\sin\overline{\psi}\right)\sin\overline{\gamma}^{(i)}\right]\right\}, \qquad (4.19)
\end{aligned}
$$

$$
\begin{aligned}
E_{3\psi} &= \left(\frac{\overline{\partial N}}{\partial v}\bar{u} - \frac{\partial N}{\partial u}\bar{v}\right) + \sum_{i=1}^{n}\left\{\bar{T}^{(i)}\left(x_p^{(i)}\cos\bar{\omega}^{(i)} - y_p^{(i)}\sin\bar{\omega}^{(i)}\right)\right\} \\
&\quad + \sum_{i=1}^{n}\left\{\frac{\bar{T}^{(i)}}{\bar{\ell}^{(i)}}\left[x_p^{(i)2} + y_p^{(i)2} - \left(x_p^{(i)}\sin\bar{\omega}^{(i)} + y_p^{(i)}\cos\bar{\omega}^{(i)}\right)^2\right]\right\} \\
&\quad + \sum_{i=1}^{n}\left\{\frac{\overline{dT}^{(i)}}{d\ell^{(i)}}\left(x_p^{(i)}\sin\bar{\omega}^{(i)} + y_p^{(i)}\cos\bar{\omega}^{(i)}\right)^2\right\} \\
&= \left(\frac{\overline{\partial N}}{\partial v}\bar{u} - \frac{\partial N}{\partial u}\bar{v}\right) + \sum_{i=1}^{n}\left\{\bar{T}^{(i)}\left(x_p^{(i)}\cos(\bar{\gamma}^{(i)} - \bar{\psi}) + y_p^{(i)}\sin(\bar{\gamma}^{(i)} - \bar{\psi})\right)\right\} \\
&\quad + \sum_{i=1}^{n}\left\{\frac{\bar{T}^{(i)}}{\bar{\ell}^{(i)}}\left(x_p^{(i)}\cos(\bar{\gamma}^{(i)} - \bar{\psi}) + y_p^{(i)}\sin(\bar{\gamma}^{(i)} - \bar{\psi})\right)^2\right\} \\
&\quad + \sum_{i=1}^{n}\left\{\frac{\overline{dT}^{(i)}}{d\ell^{(i)}}\left(x_p^{(i)}\sin(\bar{\gamma}^{(i)} - \bar{\psi}) - y_p^{(i)}\cos(\bar{\gamma}^{(i)} - \bar{\psi})\right)^2\right\} .
\end{aligned}
\tag{4.20}
$$

4.2. Stability Coefficients and Characteristic Equation

The expanded linearized equations of motion (4.7), (4.12) and (4.17) can be combined into the form of (1.1). By introducing the differential operator $\mathcal{D} = d/dt$, these equations can further be written as

$$
\begin{aligned}
&\left[(m - X_{\dot{u}})\cos\bar{\psi}\mathcal{D}^2 + \left(\frac{\overline{\partial X}}{\partial v}\sin\bar{\psi} - \frac{\overline{\partial X}}{\partial u}\cos\bar{\psi}\right)\mathcal{D} + E_{1x}\right]\Delta x \\
&+\left[(m - X_{\dot{u}})\sin\bar{\psi}\mathcal{D}^2 - \left(\frac{\overline{\partial X}}{\partial u}\sin\bar{\psi} + \frac{\overline{\partial X}}{\partial v}\cos\bar{\psi}\right)\mathcal{D} + E_{1y}\right]\Delta y \\
&+\left[-\left(X_{\dot{u}}\bar{v} + \frac{\overline{\partial X}}{\partial r}\right)\mathcal{D} + E_{1\psi}\right]\Delta\psi = 0 ,
\end{aligned}
\tag{4.21}
$$

$$
\begin{aligned}
&\left[-(m - Y_{\dot{v}})\sin\bar{\psi}\mathcal{D}^2 + \left(\frac{\overline{\partial X}}{\partial v}\sin\bar{\psi} - \frac{\overline{\partial X}}{\partial u}\cos\bar{\psi}\right)\mathcal{D} + E_{2x}\right]\Delta x \\
&+\left[(m - Y_{\dot{v}})\cos\bar{\psi}\mathcal{D}^2 - \left(\frac{\overline{\partial Y}}{\partial u}\sin\bar{\psi} + \frac{\overline{\partial Y}}{\partial v}\cos\bar{\psi}\right)\mathcal{D} + E_{2y}\right]\Delta y \\
&+\left[-Y_{\dot{r}}\mathcal{D}^2 + \left(Y_{\dot{v}}\bar{u} - \frac{\overline{\partial Y}}{\partial r}\right)\mathcal{D} + E_{2\psi}\right]\Delta\psi = 0 ,
\end{aligned}
\tag{4.22}
$$

$$\left[N_{\dot{v}}\sin\overline{\psi}\mathcal{D}^2+\left(\frac{\overline{\partial N}}{\partial v}\sin\overline{\psi}-\frac{\overline{\partial N}}{\partial u}\cos\overline{\psi}\right)\mathcal{D}+E_{3x}\right]\Delta x$$
$$+\left[-N_{\dot{v}}\cos\overline{\psi}\mathcal{D}^2-\left(\frac{\overline{\partial N}}{\partial u}\sin\overline{\psi}+\frac{\overline{\partial N}}{\partial v}\cos\overline{\psi}\right)\mathcal{D}+E_{3y}\right]\Delta y$$
$$+\left[(I_z-N_{\dot{r}})\mathcal{D}^2+(N_{\dot{v}}\overline{u}-\frac{\overline{\partial N}}{\partial r})\mathcal{D}+E_{3\psi}\right]\Delta\psi=0\ . \tag{4.23}$$

The characteristic equation for Δx, Δy, or $\Delta\psi$ derived from (4.21)-(4.23) is:

$$A\sigma^6+B\sigma^5+C\sigma^4+D\sigma^3+E\sigma^2+F\sigma+G=0\ , \tag{4.24}$$

where

$$A=(m-Y_{\dot{v}})(I_z-N_{\dot{r}})-N_{\dot{v}}Y_{\dot{r}}\ , \tag{4.25}$$

$$B=(m-X_{\dot{u}})\left[N_{\dot{v}}(m\overline{u}-\frac{\overline{\partial Y}}{\partial r})-(I_z-N_{\dot{r}})\frac{\overline{\partial Y}}{\partial v}-(m-Y_{\dot{v}})\frac{\overline{\partial N}}{\partial r}-Y_{\dot{r}}\frac{\overline{\partial N}}{\partial v}\right]$$
$$+\frac{\overline{\partial X}}{\partial u}\left[Y_{\dot{r}}N_{\dot{v}}-(m-Y_{\dot{v}})(I_z-N_{\dot{r}})\right]\ , \tag{4.26}$$

$$C=(m-X_{\dot{u}})\left[\overline{u}\left(Y_{\dot{v}}\frac{\overline{\partial N}}{\partial v}-N_{\dot{v}}\frac{\overline{\partial Y}}{\partial v}\right)+\frac{\overline{\partial Y}}{\partial v}\frac{\overline{\partial N}}{\partial r}+(I_z-N_{\dot{r}})(E_{2y}\cos\overline{\psi}-E_{2x}\sin\overline{\psi})\right]$$
$$+(m-X_{\dot{u}})\left[Y_{\dot{r}}(E_{3y}\cos\overline{\psi}-E_{3x}\sin\overline{\psi})+N_{\dot{v}}E_{2\psi}+(m-Y_{\dot{v}})E_{3\psi}\right]$$
$$+\left[(m-Y_{\dot{v}})(I_z-N_{\dot{r}})-N_{\dot{v}}Y_{\dot{r}}\right](E_{1x}\cos\overline{\psi}+E_{1y}\sin\overline{\psi})$$
$$+\frac{\overline{\partial X}}{\partial u}\left[(m-Y_{\dot{v}})\frac{\overline{\partial N}}{\partial r}+(I_z-N_{\dot{r}})\frac{\overline{\partial Y}}{\partial v}-N_{\dot{v}}\left(m\overline{u}-\frac{\overline{\partial Y}}{\partial r}\right)+Y_{\dot{r}}\frac{\overline{\partial N}}{\partial v}\right]$$
$$-\frac{\overline{\partial Y}}{\partial u}\left[(I_z-N_{\dot{r}})\frac{\overline{\partial X}}{\partial v}+N_{\dot{v}}\left(X_{\dot{u}}\overline{v}+\frac{\overline{\partial X}}{\partial r}\right)\right]-\frac{\overline{\partial N}}{\partial u}\left[(m-Y_{\dot{v}})\left(X_{\dot{u}}\overline{v}+\frac{\overline{\partial X}}{\partial r}\right)+Y_{\dot{r}}\frac{\overline{\partial X}}{\partial v}\right]\ , \tag{4.27}$$

$$D=(m-X_{\dot{u}})\left[\left(N_{\dot{v}}\overline{u}-\frac{\overline{\partial N}}{\partial r}\right)(E_{2y}\cos\overline{\psi}-E_{2x}\sin\overline{\psi})-\left(Y_{\dot{v}}\overline{u}-\frac{\overline{\partial Y}}{\partial r}\right)(E_{3y}\cos\overline{\psi}-E_{3x}\sin\overline{\psi})\right]$$
$$+(m-X_{\dot{u}})\left[\frac{\overline{\partial N}}{\partial v}E_{2\psi}+\frac{\overline{\partial Y}}{\partial v}E_{3\psi}\right]+\frac{\overline{\partial X}}{\partial u}\left[\left(N_{\dot{v}}\overline{u}-\frac{\overline{\partial N}}{\partial r}\right)\frac{\overline{\partial Y}}{\partial v}-\left(Y_{\dot{v}}\overline{u}-\frac{\overline{\partial Y}}{\partial r}\right)\frac{\overline{\partial N}}{\partial v}\right]$$

$$
\begin{aligned}
&+(I_z - N_{\dot{r}})\left[\frac{\overline{\partial X}}{\partial u}(E_{2x}\sin\overline{\psi} - E_{2y}\cos\overline{\psi}) + \frac{\overline{\partial X}}{\partial v}(E_{2x}\cos\overline{\psi} + E_{2y}\sin\overline{\psi})\right] \\
&+(I_z - N_{\dot{r}})\left[\frac{\overline{\partial Y}}{\partial u}(E_{1y}\cos\overline{\psi} - E_{1x}\sin\overline{\psi}) - \frac{\overline{\partial Y}}{\partial v}(E_{1y}\sin\overline{\psi} + E_{1x}\cos\overline{\psi})\right] \\
&-(m - Y_{\dot{v}})\left[\frac{\overline{\partial X}}{\partial u}E_{3\psi} - \left(X_{\dot{u}}\overline{v} + \frac{\overline{\partial X}}{\partial r}\right)(E_{3x}\cos\overline{\psi} + E_{3y}\sin\overline{\psi}) - \frac{\overline{\partial N}}{\partial u}E_{1\psi}\right] \\
&-(m - Y_{\dot{v}})\left[\frac{\overline{\partial N}}{\partial r}(E_{1x}\cos\overline{\psi} + E_{1y}\sin\overline{\psi})\right] - N_{\dot{v}}\left[\frac{\overline{\partial X}}{\partial u}E_{2\psi}\right] \\
&+N_{\dot{v}}\left[\left(m\overline{u} - \frac{\overline{\partial Y}}{\partial r}\right)(E_{1x}\cos\overline{\psi} + E_{1y}\sin\overline{\psi}) + \left(X_{\dot{u}}\overline{v} + \frac{\overline{\partial X}}{\partial r}\right)(E_{2x}\cos\overline{\psi} + E_{2y}\sin\overline{\psi}) + \frac{\overline{\partial Y}}{\partial u}E_{1\psi}\right] \\
&+Y_{\dot{r}}\left[\frac{\overline{\partial X}}{\partial u}(E_{3x}\sin\overline{\psi} - E_{3y}\cos\overline{\psi}) + \frac{\overline{\partial X}}{\partial v}(E_{3x}\cos\overline{\psi} + E_{3y}\sin\overline{\psi})\right] \\
&+Y_{\dot{r}}\left[\frac{\overline{\partial N}}{\partial u}(E_{1y}\cos\overline{\psi} - E_{1x}\sin\overline{\psi}) - \frac{\overline{\partial N}}{\partial v}(E_{1y}\sin\overline{\psi} + E_{1x}\cos\overline{\psi})\right] \\
&+\left(X_{\dot{u}}\overline{v} + \frac{\overline{\partial X}}{\partial r}\right)\left(\frac{\overline{\partial Y}}{\partial v}\frac{\overline{\partial N}}{\partial u} - \frac{\overline{\partial Y}}{\partial u}\frac{\overline{\partial N}}{\partial v}\right) + \left(Y_{\dot{v}}\overline{u} - \frac{\overline{\partial Y}}{\partial r}\right)\frac{\overline{\partial X}}{\partial v}\frac{\overline{\partial N}}{\partial u} - \left(N_{\dot{v}}\overline{u} - \frac{\overline{\partial N}}{\partial r}\right)\frac{\overline{\partial X}}{\partial v}\frac{\overline{\partial Y}}{\partial u}\,, \qquad (4.28)
\end{aligned}
$$

$$
\begin{aligned}
E = {} & (m - X_{\dot{u}})\left[(E_{2y}E_{3\psi} - E_{3y}E_{2\psi})\cos\overline{\psi} + (E_{3x}E_{2\psi} - E_{2x}E_{3\psi})\sin\overline{\psi}\right] \\
&+\frac{\overline{\partial X}}{\partial u}\left[\left(N_{\dot{v}}\overline{u} - \frac{\overline{\partial N}}{\partial r}\right)(E_{2x}\sin\overline{\psi} - E_{2y}\cos\overline{\psi}) + \left(Y_{\dot{v}}\overline{u} - \frac{\overline{\partial Y}}{\partial r}\right)(E_{3y}\cos\overline{\psi} - E_{3x}\sin\overline{\psi})\right] \\
&-\frac{\overline{\partial X}}{\partial u}\left[\frac{\overline{\partial N}}{\partial v}E_{2\psi} - \frac{\overline{\partial Y}}{\partial v}E_{3\psi}\right] + (I_z - N_{\dot{r}})\left[E_{1x}E_{2y} - E_{2x}E_{1y}\right] + Y_{\dot{r}}\left[E_{1x}E_{3y} - E_{3x}E_{1y}\right] \\
&+(m - Y_{\dot{v}})\left[(E_{1x}\cos\overline{\psi} + E_{1y}\sin\overline{\psi})E_{3\psi} - (E_{3x}\cos\overline{\psi} + E_{3y}\sin\overline{\psi})E_{1\psi}\right] \\
&+N_{\dot{v}}\left[(E_{1x}\cos\overline{\psi} + E_{1y}\sin\overline{\psi})E_{2\psi} - (E_{2x}\cos\overline{\psi} + E_{2y}\sin\overline{\psi})E_{1\psi}\right] \\
&+\left(Y_{\dot{v}}\overline{u} - \frac{\overline{\partial Y}}{\partial r}\right)\left[E_{1x}\left(\frac{\overline{\partial N}}{\partial u}\sin\overline{\psi} + \frac{\overline{\partial N}}{\partial v}\cos\overline{\psi}\right) + E_{1y}\left(\frac{\overline{\partial N}}{\partial v}\sin\overline{\psi} - \frac{\overline{\partial N}}{\partial u}\cos\overline{\psi}\right)\right] \\
&-\left(Y_{\dot{v}}\overline{u} - \frac{\overline{\partial Y}}{\partial r}\right)\left[\frac{\overline{\partial X}}{\partial v}(E_{3x}\cos\overline{\psi} + E_{3y}\sin\overline{\psi})\right] + \left(N_{\dot{v}}\overline{u} - \frac{\overline{\partial N}}{\partial r}\right)\left[\frac{\overline{\partial X}}{\partial v}(E_{2x}\cos\overline{\psi} + E_{2y}\sin\overline{\psi})\right] \\
&-\left(N_{\dot{v}}\overline{u} - \frac{\overline{\partial N}}{\partial r}\right)\left[E_{1x}\left(\frac{\overline{\partial Y}}{\partial u}\sin\overline{\psi} + \frac{\overline{\partial Y}}{\partial v}\cos\overline{\psi}\right) - E_{1y}\left(\frac{\overline{\partial Y}}{\partial u}\cos\overline{\psi} - \frac{\overline{\partial Y}}{\partial v}\sin\overline{\psi}\right)\right] \\
&+\left(X_{\dot{u}}\overline{v} + \frac{\overline{\partial X}}{\partial r}\right)\left[E_{2x}\left(\frac{\overline{\partial N}}{\partial u}\sin\overline{\psi} + \frac{\overline{\partial N}}{\partial v}\cos\overline{\psi}\right) + E_{2y}\left(\frac{\overline{\partial N}}{\partial v}\sin\overline{\psi} - \frac{\overline{\partial N}}{\partial u}\cos\overline{\psi}\right)\right]
\end{aligned}
$$

$$-\left(X_{\dot{u}}\bar{v}+\frac{\overline{\partial X}}{\partial r}\right)\left[E_{3x}\left(\frac{\overline{\partial Y}}{\partial u}\sin\overline{\psi}+\frac{\overline{\partial Y}}{\partial v}\cos\overline{\psi}\right)-E_{3y}\left(\frac{\overline{\partial Y}}{\partial u}\cos\overline{\psi}-\frac{\overline{\partial Y}}{\partial v}\sin\overline{\psi}\right)\right]$$
$$+\left(\frac{\overline{\partial N}}{\partial v}\frac{\overline{\partial Y}}{\partial u}-\frac{\overline{\partial Y}}{\partial v}\frac{\overline{\partial N}}{\partial u}\right)E_{1\psi}+\frac{\overline{\partial X}}{\partial v}\frac{\overline{\partial N}}{\partial u}E_{2\psi}-\frac{\overline{\partial X}}{\partial v}\frac{\overline{\partial Y}}{\partial u}E_{3\psi}\ , \tag{4.29}$$

$$F=\frac{\overline{\partial X}}{\partial u}\left[(E_{2x}E_{3\psi}-E_{3x}E_{2\psi})\sin\overline{\psi}+(E_{2y}E_{3\psi}-E_{3y}E_{2\psi})\cos\overline{\psi}\right]$$
$$+\frac{\overline{\partial X}}{\partial v}\left[(E_{2x}E_{3\psi}-E_{3x}E_{2\psi})\cos\overline{\psi}+(E_{2y}E_{3\psi}-E_{3y}E_{2\psi})\sin\overline{\psi}\right]$$
$$+\frac{\overline{\partial Y}}{\partial u}\left[(E_{1y}E_{3\psi}-E_{3y}E_{1\psi})\cos\overline{\psi}+(E_{3x}E_{1\psi}-E_{1x}E_{3\psi})\sin\overline{\psi}\right]$$
$$+\frac{\overline{\partial Y}}{\partial v}\left[(E_{3x}E_{1\psi}-E_{1x}E_{3\psi})\cos\overline{\psi}+(E_{3y}E_{1\psi}-E_{1y}E_{3\psi})\sin\overline{\psi}\right]$$
$$+\frac{\overline{\partial N}}{\partial u}\left[(E_{2y}E_{1\psi}-E_{1y}E_{2\psi})\cos\overline{\psi}+(E_{1x}E_{2\psi}-E_{2x}E_{1\psi})\sin\overline{\psi}\right]$$
$$+\frac{\overline{\partial N}}{\partial v}\left[(E_{1x}E_{2\psi}-E_{2x}E_{1\psi})\cos\overline{\psi}+(E_{1y}E_{2\psi}-E_{2y}E_{1\psi})\sin\overline{\psi}\right]$$
$$+\left(X_{\dot{u}}\bar{v}+\frac{\overline{\partial X}}{\partial r}\right)\left[E_{3x}E_{2y}-E_{2x}E_{3y}\right]+\left(Y_{\dot{v}}\bar{u}-\frac{\overline{\partial Y}}{\partial r}\right)\left[E_{3x}E_{1y}-E_{1x}E_{3y}\right]$$
$$+\left(N_{\dot{v}}\bar{u}-\frac{\overline{\partial N}}{\partial r}\right)\left[E_{1x}E_{2y}-E_{2x}E_{1y}\right]\ , \tag{4.30}$$

$$G=E_{1x}(E_{2y}E_{3\psi}-E_{3y}E_{2\psi})+E_{2x}(E_{3y}E_{1\psi}-E_{1y}E_{3\psi})+E_{3x}(E_{1y}E_{2\psi}-E_{2y}E_{1\psi})\ . \tag{4.31}$$

Equation (4.24) is in the form of (1.1), and expressions (4.25)-(4.31) are the sixth-order Routh-Hurwitz stability coefficients that appaer in (1.1). Constant A in (4.25) depends exclusively on inertial vessel properties, and corresponds to the first Routh-Hurwitz coefficient in the maneuvering stability criteria [1]. Coefficient B in (4.26) represents coupling between inertia and damping, and depends on vessel properties, and the value of the equilibrium forward velocity $\bar{u}$. The remaining coefficients depend on vessel properties, line arrangement $(\ell_w^{(i)}, x_p^{(i)}, y_p^{(i)}, \omega^{(i)}, x_m^{(i)}, y_m^{(i)})$, values of the state variables evaluated at equilibrium $(\ell^{(i)}, \bar{x}, \bar{y}, \bar{\gamma}^{(i)}, \overline{\psi})$, and on equilibrium velocities $\bar{u}$ and $\bar{v}$. Coefficients C, D, E, and F represent coupling between inertia, damping and mooring line stiffness terms, while coefficient G corresponds to coupling terms between damping and mooring line stiffness exclusively.

4.3. Stability Criteria for Towing/Mooring Systems

The characteristic equation (4.24) in σ can be written in the form:

$$A(\sigma-\sigma_1)(\sigma-\sigma_2)(\sigma-\sigma_3)(\sigma-\sigma_4)(\sigma-\sigma_5)(\sigma-\sigma_6)=0\ , \tag{4.32}$$

where σ_1, σ_2, σ_3, σ_4, σ_5 and σ_6 are the eigenvalues of the system, or the roots of equation (4.24). As explained in Chapter I, stability follows if all real parts of the six roots are negative. Comparison between equations (4.24) and (4.32) produces the following relations between the Routh-Hurwitz coefficients and the roots of the sixth-order system:

$$B/A=-(\sigma_1+\sigma_2+\sigma_3+\sigma_4+\sigma_5+\sigma_6)\ , \tag{4.33}$$

$$\begin{aligned} C/A=(&\sigma_1\sigma_2+\sigma_1\sigma_3+\sigma_1\sigma_4+\sigma_1\sigma_5+\sigma_1\sigma_6+\sigma_2\sigma_3+\sigma_2\sigma_4+\sigma_2\sigma_5+\sigma_2\sigma_6\\ &+\sigma_3\sigma_4+\sigma_3\sigma_5+\sigma_3\sigma_6+\sigma_4\sigma_5+\sigma_4\sigma_6+\sigma_5\sigma_6)\ , \end{aligned} \tag{4.34}$$

$$\begin{aligned} D/A=-(&\sigma_1\sigma_2\sigma_3+\sigma_1\sigma_2\sigma_4+\sigma_1\sigma_2\sigma_5+\sigma_1\sigma_2\sigma_6+\sigma_1\sigma_3\sigma_4+\sigma_1\sigma_3\sigma_5+\sigma_1\sigma_3\sigma_6\\ &+\sigma_1\sigma_4\sigma_5+\sigma_1\sigma_4\sigma_6+\sigma_1\sigma_5\sigma_6+\sigma_2\sigma_3\sigma_4+\sigma_2\sigma_3\sigma_5+\sigma_2\sigma_3\sigma_6+\sigma_2\sigma_4\sigma_5\\ &+\sigma_2\sigma_4\sigma_6+\sigma_2\sigma_5\sigma_6+\sigma_3\sigma_4\sigma_5+\sigma_3\sigma_4\sigma_6+\sigma_3\sigma_5\sigma_6+\sigma_4\sigma_5\sigma_6)\ , \end{aligned} \tag{4.35}$$

$$\begin{aligned} E/A=(&\sigma_1\sigma_2\sigma_3\sigma_4+\sigma_1\sigma_2\sigma_3\sigma_5+\sigma_1\sigma_2\sigma_3\sigma_6+\sigma_1\sigma_2\sigma_4\sigma_5+\sigma_1\sigma_2\sigma_4\sigma_6+\sigma_1\sigma_2\sigma_5\sigma_6\\ &+\sigma_1\sigma_3\sigma_4\sigma_5+\sigma_1\sigma_3\sigma_4\sigma_6+\sigma_1\sigma_3\sigma_5\sigma_6+\sigma_1\sigma_4\sigma_5\sigma_6+\sigma_2\sigma_3\sigma_4\sigma_5+\sigma_2\sigma_3\sigma_4\sigma_6\\ &+\sigma_2\sigma_3\sigma_5\sigma_6+\sigma_2\sigma_4\sigma_5\sigma_6+\sigma_3\sigma_4\sigma_5\sigma_6)\ , \end{aligned} \tag{4.36}$$

$$\begin{aligned} F/A=-(&\sigma_1\sigma_2\sigma_3\sigma_4\sigma_5+\sigma_1\sigma_2\sigma_3\sigma_4\sigma_6+\sigma_1\sigma_2\sigma_3\sigma_5\sigma_6+\sigma_1\sigma_2\sigma_4\sigma_5\sigma_6\\ &+\sigma_1\sigma_3\sigma_4\sigma_5\sigma_6+\sigma_2\sigma_3\sigma_4\sigma_5\sigma_6)\ , \end{aligned} \tag{4.37}$$

$$G/A=\sigma_1\sigma_2\sigma_3\sigma_4\sigma_5\sigma_6\ . \tag{4.38}$$

Expressions (4.33)-(4.38) give the necessary conditions for the stability of the sixth-order system without having to solve explicitly for the eigenvalues: $B/A>0$, $C/A>0$, $D/A>0$, $E/A>0$, $F/A>0$, and $G/A>0$. Following the theory presented in Chapter I, the necessary and sufficient conditions for stability are compiled into the following six criteria:

$$C_{R1}=\frac{B}{A}>0\ , \tag{4.39}$$

$$C_{R2} = \frac{C}{A} - \frac{D}{B} > 0 \,, \tag{4.40}$$

$$C_{R3} = \frac{D}{A} + \frac{B}{A}\frac{(AF - BE)}{(BC - AD)} > 0 \,, \tag{4.41}$$

$$C_{R4} = \frac{E}{A} + \frac{(BG - CF)(BC - AD) - AF(AF - BE)}{A[D(BC - AD) + B(AF - BE)]} > 0 \,, \tag{4.42}$$

$$C_{R5} = \frac{F}{A} + \frac{G}{A}\left[\frac{(BC - AD)(D^2 - BF) + BD(AF - BE) + B^3 G}{(BC - AD)(CF - DE - BG) + (AF - BE)^2}\right] > 0 \,, \tag{4.43}$$

$$C_{R6} = \frac{G}{A} > 0 \,. \tag{4.44}$$

For a system to be stable (i.e. the real parts of all six eigenvalues be negative), relations (4.39)-(4.44) must hold. The number of eigenvalues with positive real parts in the system is equal to the number of sign changes between the values of the stability criteria in the order presented, as mentioned in Chapter I.

Coefficients A and B are always greater than zero [14], and therefore the first stability criterion (4.39) is always satisfied. Expression (4.33) shows that the sum of the six eigenvalues therefore must be real and negative. This implies that the number of eigenvalues with positive real parts in towing and mooring system dynamics can be at most five, and thus, the maximum dimension of the unstable manifold cannot exceed five.

4.4. Loss of Stability in Towing/Mooring Systems

As mentioned previously, the stability of the system depends on the signs of the real parts of the system eigenvalues, or conversely, on the number of sign changes in the stability criteria (4.39)-(4.44). An initially stable system may become unstable, and viceversa, if a single system parameter is changed. The types of loss of stability that towing and mooring systems exhibit are classified as static and dynamic [7].

Static Loss of Stability

Static Loss of Stability (*SLS*) occurs when one real eigenvalue crosses zero from the negative to the positive real axis as a system parameter is varied, and occurs in towing and mooring systems as a result of the action of external excitation (i.e. current, wind, second order drift forces) which maintain a constant magnitude and heading. Pitchfork, saddle node and simple stationary bifurcations are of static nature [11]. *SLS* can be represented analytically by setting the term *G/A* (4.38) to zero. This term is the product of the six eigenvalues present in the system. As one real eigenvalue crosses from the negative to the positive real axis or vice versa, one root becomes zero and expression (4.38) becomes active, thus establishing the bifurcation point where static loss of stability occurs, and therefore

$$SLS = C_{RS} = \frac{G}{A} = 0 \,. \tag{4.45}$$

The bifurcation corresponding to (4.45) provides the necessary and sufficient condition for static loss of stability, i.e. $C_{RS} = 0$ results in static loss of stability and viceversa.

Dynamic Loss of Stability

Dynamic Loss of Stability (*DLS*) occurs when a complex pair of eigenvalues crosses the real axis from negative to positive with nonzero speed as one parameter in the system is varied, and is a result of following forces such as the hydrodynamic pressure applied to the hull. Dynamic loss of stability can be determined analytically by multiplying the first five stability criteria and setting this new expression to zero. The expression obtained is

$$C_{RC} = C_{R5}C_{R4}C_{R3}C_{R2}C_{R1} = \frac{(BC - AD)(DEF + 2BFG - D^2G - CF^2)}{A^5} - \frac{F(BE - AF)^2 + BG(ADF + B^2G - BDE)}{A^5} \,, \tag{4.46}$$

and dynamic loss of stability occurs if

$$DLS = C_{RC} = 0 \,. \tag{4.47}$$

After extensive algebra, expression (4.46) can be recast in terms of the system eigenvalues as:

$$C_{RC} = -[(\sigma_1+\sigma_2)(\sigma_1+\sigma_3)(\sigma_1+\sigma_4)(\sigma_1+\sigma_5)(\sigma_1+\sigma_6)(\sigma_2+\sigma_3)(\sigma_2+\sigma_4)(\sigma_2+\sigma_5)$$
$$(\sigma_2+\sigma_6)(\sigma_3+\sigma_4)(\sigma_3+\sigma_5)(\sigma_3+\sigma_6)(\sigma_4+\sigma_5)(\sigma_4+\sigma_6)(\sigma_5+\sigma_6)] \ . \qquad (4.48)$$

The procedure used to derive the expression for C_{RC} above is described in [14]. Equation (4.48) consists of the product of fifteen terms, each containing the sum of two roots of the sixth-order system. When a complex pair of eigenvalues crosses the real axis from positive to negative or vice versa (irrespective of the eigenvalue pair combination), the sum of two eigenvalues becomes zero and expression (4.46) vanishes, thus establishing a bifurcation point for dynamic loss of stability. Such expression is necessary for determining dynamic loss of stability in the system. Setting C_{RC} to zero, however, does not necessarily imply that the system has undergone dynamic loss of stability. A pair of real eigenvalues with opposite signs, or two or more zero real eigenvalues, for example, would also satisfy (4.47). The bifurcation point generated by setting C_{RC} equal to zero, provides a necessary and sufficient condition for dynamic loss of stability, provided the exceptions noted above do not occur.

4.5. Numerical Examples

Consider a 3-line barge with skegs (1 line placed forward of the *CG*, 2 lines aft), which is moored by nonlinear elastic strings under a 2 knot current. The barge particulars and hydrodynamic properties are shown in [19]. The barge system possesses a symmetric mooring line configuration (see Chapter V) and is originally aligned to the direction of the current. The mooring line parameters for this system are as follows:

Line 1: $\ell_w / L = 0.5$, $x_p / L = 0.45$, $y_p / B = 0.0$, $\Omega = 0.0°$, $E_I = 0.012$
Line 2: $\ell_w / L = 0.5$, $x_p / L = -0.45$, $y_p / B = 0.5$, $\Omega = 15.0°$, $E_I = 0.0$
Line 3: $\ell_w / L = 0.5$, $x_p / L = -0.45$, $y_p / B = -0.5$, $\Omega = 15.0°$, $E_I = 0.0$,

where Ω is the angle of aperture between the x-axis and the towing/mooring line. This mooring configuration possesses three different equilibria, which have been found by solving equations (3.13)-(3.15) and are denoted as A (symmetric equilibrium), B (nonsymmetric equilibrium) and B' (mirror image of B).

The eigenvalues for this system about equilibria A, B and B' have been obtained numerically and are depicted in Table 4.1. The Dimension of the Unstable Manifold (*DUM*) is equal to the number of eigenvalues with positive real part. For equilibrium A, $DUM = 1$; for equilibria B and B', $DUM = 0$, thus showing that equilibrium A is unstable while equilibria B and B' are stable.

Table 4.1: Eigenvalues for 3-line barge with skegs

Eigenvalue	Equilibrium A	Equilibria B and B'
σ_1	$-0.1189+i7.995$	$-0.1230+i8.342$
σ_2	$-0.1189-i7.995$	$-0.1230-i8.342$
σ_3	-1.4933	-1.4018
σ_4	0.1233	-0.1109
σ_5	$-0.4398+i1.196$	$-0.3645+i1.197$
σ_6	$-0.4398-i1.196$	$-0.3645-i1.197$

Table 4.2 shows the corresponding values for the stability criteria for the same mooring system about equilibria A, B, and B'. The Number of Sign Changes between the stability criteria are denoted as *NSC* in Table 4.2, and correspond to the dimension of the unstable manifold.

Table 4.2: Sixth-order stability criteria for 3-line barge with skegs

Criterion	Equilibrium A	Equilibria B and B'
C_{R1}	2.48753	2.48787
C_{R2}	8.21111	8.98351
C_{R3}	111.28097	123.7772
C_{R4}	106.14232	115.79580
C_{R5}	157.64610	150.10839
C_{R6}	−19.11216	16.96155
NSC	1	0

In Table 4.2, there is one change in sign between the stability criteria around equilibrium A. This corresponds to a positive real eigenvalue with a one-dimensional unstable manifold. The number of sign changes between the stability criteria about equilibria B and B' is zero, and therefore all eigenvalues have negative real parts, and the system is stable around equilibria B and B'. These results are in accordance with Table 4.1.

The regions where static and dynamic loss of stability occur in this particular system around equilibrium A, can be discerned by varying a parameter. Figure 4.1 shows the values of C_{RS} and C_{RC} as a function of the parameter x_p/L, which is varied simultaneously for all mooring lines from 0.0 to 0.5. The maximum values for C_{RS} and C_{RC} in Figure 4.1 for the range of x_p/L values have been scaled to 1.0. The value of x_p/L for which $C_{RS} = 0$, where static loss of stability occurs, is 0.3475. Dynamic loss of stability occurs for $x_p/L = 0.1292$, where the value of C_{RC} is zero.

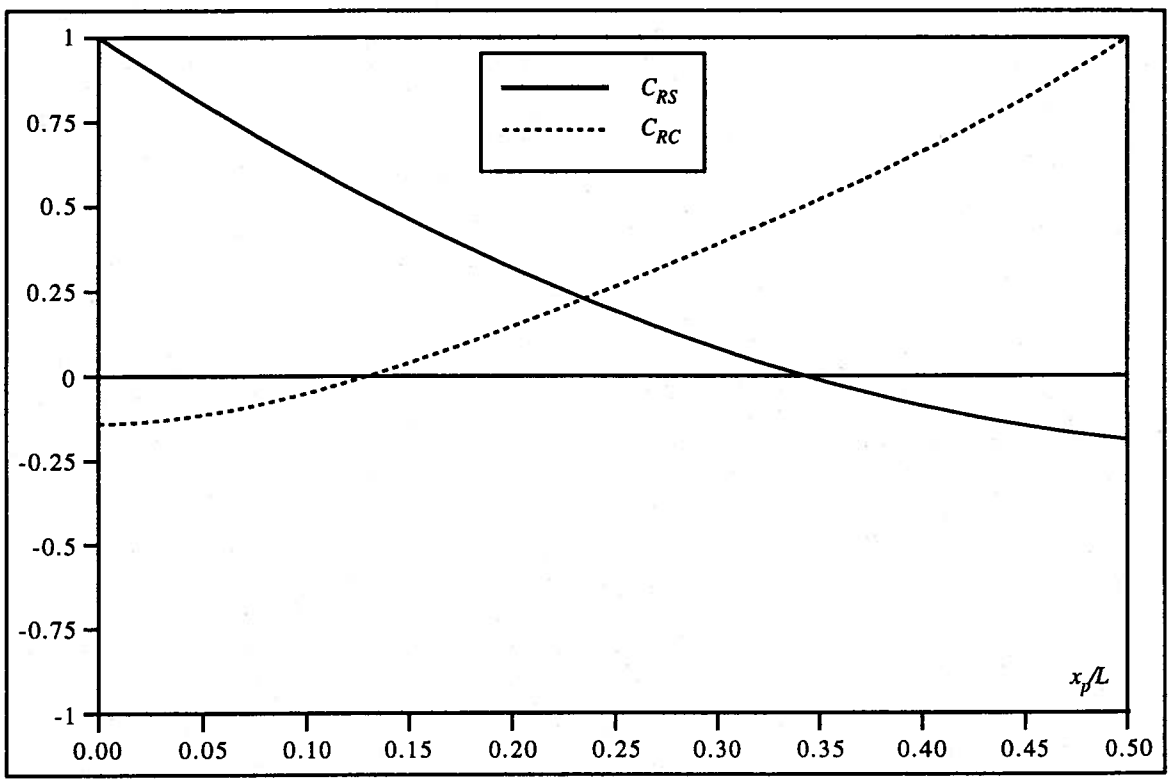

Figure 4.1: Values of C_{RS} and C_{RC}, 3-line barge with skegs: $\ell_w/L = 0.5$, $y_p/B = 0.5$, $\Omega = 15°$, $E_I = 0.012$

V. SYMMETRIC TOWING/MOORING SYSTEMS

The analytical expressions derived in the previous chapter show the complexity associated in the design of general towing and mooring systems. The complex form of those expressions demonstrate that rules of thumb that can be used in design, cannot be presently derived. Such expressions however, can be simplified greatly for symmetric systems, where a number of rules can be discerned and can be applied subsequently to the design of symmetric as well as general systems. A symmetric towing/mooring configuration is such that the arrangement and length of the towing/mooring lines are selected as to maintain geometric symmetry about the X-axis. A symmetric configuration which is aligned to the direction of the predominant external excitation is labeled as a symmetric towing/mooring system, as shown in Figure 5.1. In this figure, the X and x-axes are aligned to the direction of the current (relative direction between the current and the tugboat(s) in towing).

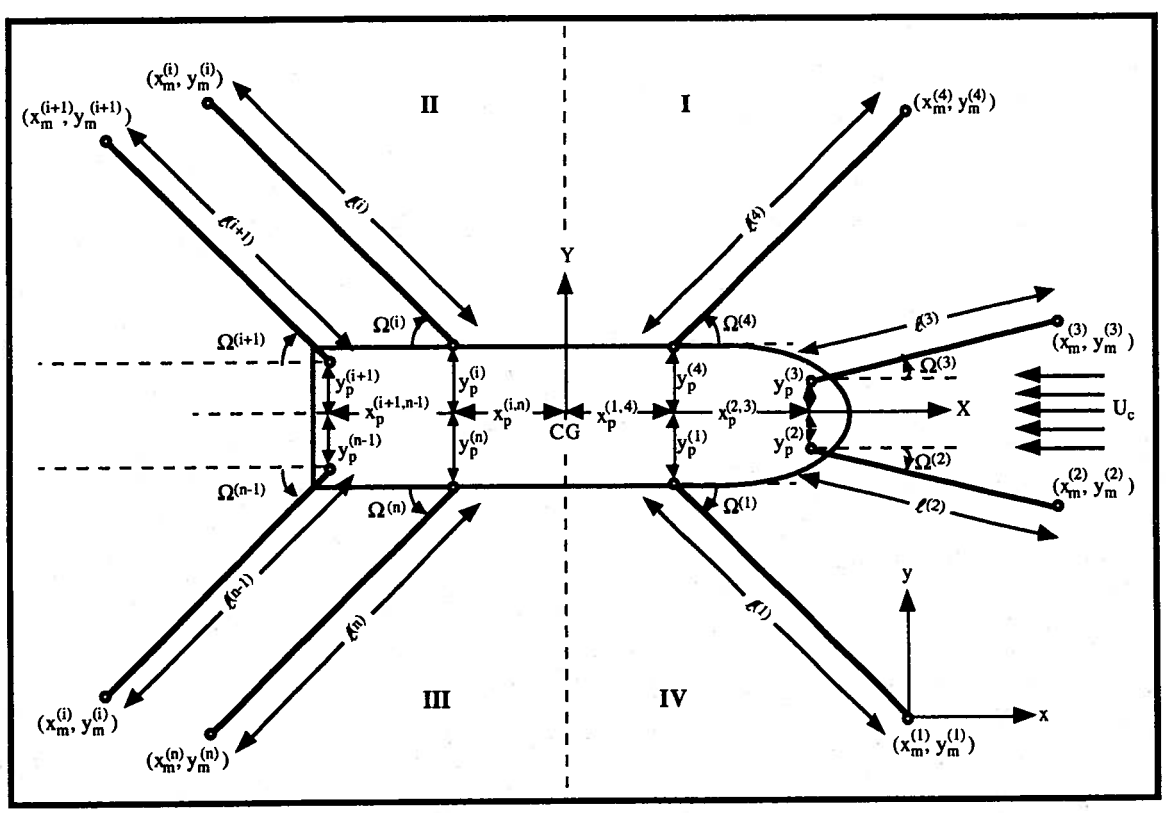

Figure 5.1: Geometry of symmetric towing/mooring system

As mentioned in Chapter IV, the angle Ω appearing in Figure 5.1 is a measure of the aperture between the x-axis and the towing/mooring line ($0 \leq \Omega \leq \pi/2$). The relationship between the angles Ω and γ in each of the four quadrants is as follows: First quadrant: $\Omega=\gamma$; second quadrant: $\Omega=\pi-\gamma$; third quadrant: $\Omega=\gamma-\pi$; fourth quadrant: $\Omega=2\pi-\gamma$.

5.1. Equilibrium and Expansion of Variables

Symmetric towing and mooring systems have the following characteristics:

- propeller and rudder effects are zero.
- equilibrium drift angle $\overline{\psi}$ is zero with respect to the relative direction of the flow and the X-axis. The vessel relative velocities at equilibrium are given by $\overline{u} = U$, $\overline{v} = 0$, and the following relations apply:

$$\cos\overline{\omega} = \cos\overline{\gamma} = \left(\frac{x_m - \overline{x} - x_p}{\overline{\ell}}\right) , \tag{5.1}$$

$$\sin\overline{\omega} = \sin\overline{\gamma} = \left(\frac{y_m - \overline{y} - y_p}{\overline{\ell}}\right) . \tag{5.2}$$

The hydrodynamic forces at equilibrium and their derivatives are reduced to:

$$\overline{X} = -\overline{R} = X_o + X_u\, U + \frac{1}{2} X_{uu}\, U^2 + \frac{1}{6} X_{uuu}\, U^3 , \tag{5.3}$$

$$\overline{Y} = \overline{N} = 0 , \tag{5.4}$$

$$\overline{\frac{\partial X}{\partial u}} = -\overline{\frac{dR}{du}} = X_u + X_{uu}\, U + \frac{1}{2} X_{uuu}\, U^2 , \tag{5.5}$$

$$\overline{\frac{\partial X}{\partial v}} = \overline{\frac{\partial X}{\partial r}} = 0 , \tag{5.6}$$

$$\overline{\frac{\partial Y}{\partial u}} = \overline{\frac{\partial N}{\partial u}} = 0 , \tag{5.7}$$

$$\frac{\overline{\partial Y}}{\partial v} = Y_v \ , \tag{5.8}$$

$$\frac{\overline{\partial Y}}{\partial r} = Y_r \ , \tag{5.9}$$

$$\frac{\overline{\partial N}}{\partial v} = N_v \ , \tag{5.10}$$

$$\frac{\overline{\partial N}}{\partial r} = N_r \ . \tag{5.11}$$

In expression (5.3), $\overline{R}$ is the resistance of the vessel evaluated at equilibrium.

Figure 5.2 depicts the relationship that exists between the values of the parameters x_p, y_p, and γ in each of the four quadrants.

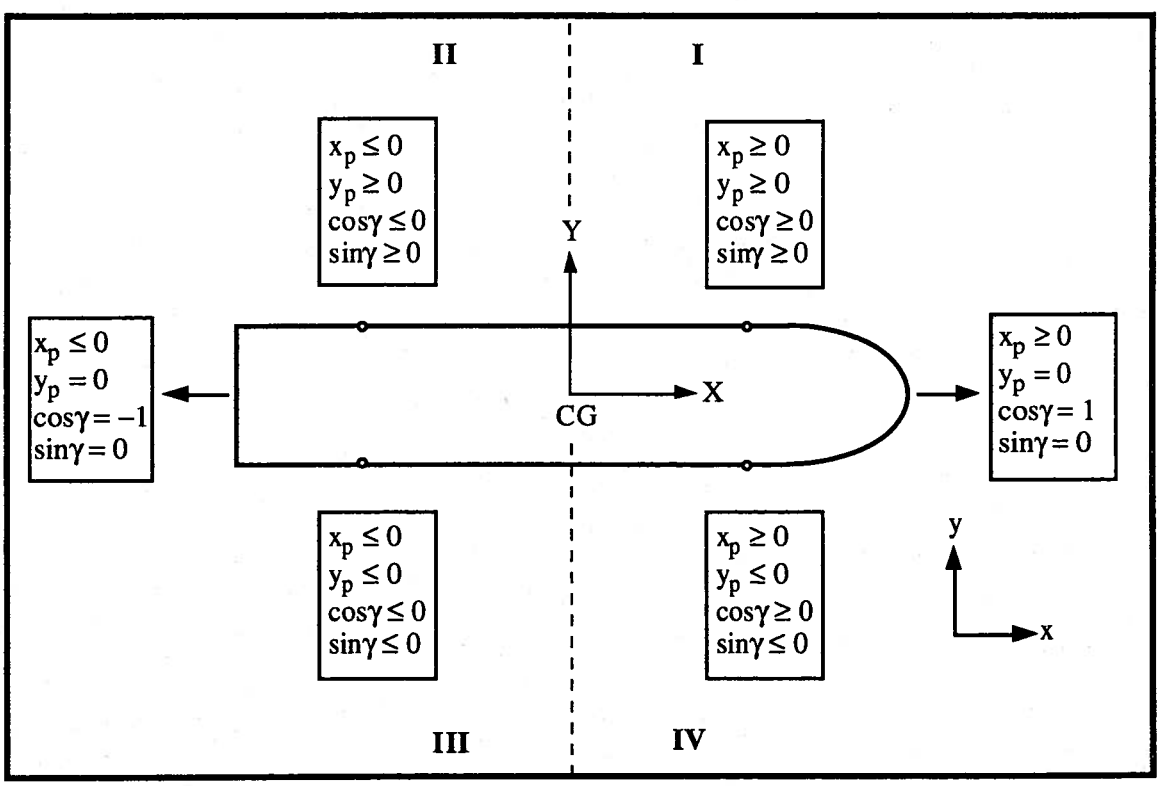

Figure 5.2: Geometric relations of parameters x_p, y_p and γ in symmetric systems

From the relations shown in Figure 5.2 above, the summation terms that include coupling between hydrodynamic damping and towing/mooring line stiffness (see equations (4.8)-(4.10), (4.13)-(4.15), and (4.18)-(4.20)) have been reduced to the following:

$$E_{1x} = \sum_{i=1}^{n}\left\{\frac{\overline{T}^{(i)}}{\overline{\ell}^{(i)}}\sin^2\overline{\gamma}^{(i)}\right\} + \sum_{i=1}^{n}\left\{\frac{\overline{dT}^{(i)}}{d\ell^{(i)}}\cos^2\overline{\gamma}^{(i)}\right\}, \tag{5.12}$$

$$E_{1y} = -\sum_{i=1}^{n}\left\{\frac{\overline{T}^{(i)}}{\overline{\ell}^{(i)}}\sin\overline{\gamma}^{(i)}\cos\overline{\gamma}^{(i)}\right\} + \sum_{i=1}^{n}\left\{\frac{\overline{dT}^{(i)}}{d\ell^{(i)}}\sin\overline{\gamma}^{(i)}\cos\overline{\gamma}^{(i)}\right\} = 0 \text{ (symmetry)}, \tag{5.13}$$

$$\begin{aligned} E_{1\psi} = &-\sum_{i=1}^{n}\left\{\overline{T}^{(i)}\sin\overline{\gamma}^{(i)}\right\} - \sum_{i=1}^{n}\left\{\frac{\overline{T}^{(i)}}{\overline{\ell}^{(i)}}\sin\overline{\gamma}^{(i)}\left(x_p^{(i)}\cos\overline{\gamma}^{(i)} + y_p^{(i)}\sin\overline{\gamma}^{(i)}\right)\right\} \\ &+\sum_{i=1}^{n}\left\{\frac{\overline{dT}^{(i)}}{d\ell^{(i)}}\cos\overline{\gamma}^{(i)}\left(x_p^{(i)}\sin\overline{\gamma}^{(i)} - y_p^{(i)}\cos\overline{\gamma}^{(i)}\right)\right\} = 0 \text{ (symmetry)}, \end{aligned} \tag{5.14}$$

$$E_{2x} = -\sum_{i=1}^{n}\left\{\frac{\overline{T}^{(i)}}{\overline{\ell}^{(i)}}\sin\overline{\gamma}^{(i)}\cos\overline{\gamma}^{(i)}\right\} + \sum_{i=1}^{n}\left\{\frac{\overline{dT}^{(i)}}{d\ell^{(i)}}\sin\overline{\gamma}^{(i)}\cos\overline{\gamma}^{(i)}\right\} = 0 \text{ (symmetry)}, \tag{5.15}$$

$$E_{2y} = \sum_{i=1}^{n}\left\{\frac{\overline{T}^{(i)}}{\overline{\ell}^{(i)}}\cos^2\overline{\gamma}^{(i)}\right\} + \sum_{i=1}^{n}\left\{\frac{\overline{dT}^{(i)}}{d\ell^{(i)}}\sin^2\overline{\gamma}^{(i)}\right\}, \tag{5.16}$$

$$\begin{aligned} E_{2\psi} = &Y_v U + \sum_{i=1}^{n}\left\{\overline{T}^{(i)}\cos\overline{\gamma}^{(i)}\left[1 + \frac{x_p^{(i)}\cos\overline{\gamma}^{(i)} + y_p^{(i)}\sin\overline{\gamma}^{(i)}}{\overline{\ell}^{(i)}}\right]\right\} \\ &+\sum_{i=1}^{n}\left\{\frac{\overline{dT}^{(i)}}{d\ell^{(i)}}\sin\overline{\gamma}^{(i)}\left(x_p^{(i)}\sin\overline{\gamma}^{(i)} - y_p^{(i)}\cos\overline{\gamma}^{(i)}\right)\right\}, \end{aligned} \tag{5.17}$$

$$\begin{aligned} E_{3x} = &-\sum_{i=1}^{n}\left\{\frac{\overline{T}^{(i)}}{\overline{\ell}^{(i)}}\sin\overline{\gamma}^{(i)}\left(x_p^{(i)}\cos\overline{\gamma}^{(i)} + y_p^{(i)}\sin\overline{\gamma}^{(i)}\right)\right\} \\ &+\sum_{i=1}^{n}\left\{\frac{\overline{dT}^{(i)}}{d\ell^{(i)}}\cos\overline{\gamma}^{(i)}\left(x_p^{(i)}\sin\overline{\gamma}^{(i)} - y_p^{(i)}\cos\overline{\gamma}^{(i)}\right)\right\} = 0 \text{ (symmetry)}, \end{aligned} \tag{5.18}$$

$$E_{3y} = \sum_{i=1}^{n}\left\{\frac{\overline{T}^{(i)}}{\overline{\ell}^{(i)}}\cos\overline{\gamma}^{(i)}\left(x_p^{(i)}\cos\overline{\gamma}^{(i)} + y_p^{(i)}\sin\overline{\gamma}^{(i)}\right)\right\} + \sum_{i=1}^{n}\left\{\frac{\overline{dT}^{(i)}}{d\ell^{(i)}}\sin\overline{\gamma}^{(i)}\left(x_p^{(i)}\sin\overline{\gamma}^{(i)} - y_p^{(i)}\cos\overline{\gamma}^{(i)}\right)\right\} , \tag{5.19}$$

$$E_{3\psi} = N_v U + \sum_{i=1}^{n}\left\{\overline{T}^{(i)}\left[x_p^{(i)}\cos\overline{\gamma}^{(i)} + y_p^{(i)}\sin\overline{\gamma}^{(i)} + \frac{1}{\overline{\ell}^{(i)}}\left(x_p^{(i)}\cos\overline{\gamma}^{(i)} + y_p^{(i)}\sin\overline{\gamma}^{(i)}\right)^2\right]\right\} + \sum_{i=1}^{n}\left\{\frac{\overline{dT}^{(i)}}{d\ell^{(i)}}\left(x_p^{(i)}\sin\overline{\gamma}^{(i)} - y_p^{(i)}\cos\overline{\gamma}^{(i)}\right)^2\right\} . \tag{5.20}$$

5.2. Equations of Motion in Symmetric Towing/Mooring Systems

For symmetric towing/mooring systems, equations of motion (4.7), (4.12) and (4.17) reduce to:

$$\left(m - X_{\dot{u}}\right)\Delta\ddot{x} + \frac{\overline{dR}}{du}\Delta\dot{x} + E_{1x}\,\Delta x = 0 , \tag{5.21}$$

$$\left(m - Y_{\dot{v}}\right)\Delta\ddot{y} - Y_v\Delta\dot{y} + E_{2y}\,\Delta y - Y_{\dot{r}}\,\Delta\ddot{\psi} + \left(Y_{\dot{v}}U - Y_r\right)\Delta\dot{\psi} + E_{2\psi}\,\Delta\psi = 0 , \tag{5.22}$$

$$-N_{\dot{v}}\,\Delta\ddot{y} - N_v\,\Delta\dot{y} + E_{3y}\,\Delta y + \left(I_z - N_{\dot{r}}\right)\Delta\ddot{\psi} + \left(N_{\dot{v}}U - N_r\right)\Delta\dot{\psi} + E_{3\psi}\,\Delta\psi = 0 . \tag{5.23}$$

Equation (5.21) is only a function of x and its time derivatives, while equations (5.22) and (5.23) are functions of y, ψ and their time derivatives exclusively. The surge equation of motion is therefore decoupled from the sway and yaw equations, and thus its stability can be studied separately. Further, this equation can be written as:

$$\Delta\ddot{x} + \frac{1}{\left(m - X_{\dot{u}}\right)}\frac{\overline{dR}}{du}\Delta\dot{x} + \frac{1}{\left(m - X_{\dot{u}}\right)}E_{1x}\,\Delta x = 0 , \tag{5.24}$$

with solution of the form:

$$\Delta x = C_1 e^{\sigma_1 t} + C_2 e^{\sigma_2 t} . \tag{5.25}$$

The equation is stable if σ_1, σ_2 have negative real parts. The eigenvalues can be obtained readily and are:

$$\sigma_{1,2} = \frac{1}{2(m - X_{\dot{u}})}\left[-\frac{\overline{dR}}{du} \pm \sqrt{\left(\frac{\overline{dR}}{du}\right)^2 - 4(m - X_{\dot{u}})E_{1x}}\right] . \tag{5.26}$$

The terms $(m - X_{\dot{u}})$, $\frac{\overline{dR}}{du}$, and E_{1x} are positive, and therefore $\mathrm{Re}\{\sigma_1, \sigma_2\} < 0$, and the surge equation of motion is stable.

Further, if $\left(\frac{\overline{dR}}{du}\right)^2 - 4(m - X_{\dot{u}})\left[\sum_{i=1}^{n}\left\{\frac{\overline{T}^{(i)}}{\overline{\ell}^{(i)}}\sin^2\overline{\gamma}^{(i)} + \frac{\overline{dT}^{(i)}}{d\ell^{(i)}}\cos^2\overline{\gamma}^{(i)}\right\}\right] < 0$, the eigenvalues can be written as:

$$\sigma_{1,2} = \frac{1}{2(m - X_{\dot{u}})}\left[-\frac{\overline{dR}}{du} \pm i\sqrt{4(m - X_{\dot{u}})E_{1x} - \left(\frac{\overline{dR}}{du}\right)^2}\right] . \tag{5.27}$$

Since the surge equation of motion is always stable for symmetric systems, the stability depends exclusively on the coupled sway and yaw equations of motion (5.22) and (5.23), by introducing the differential operator $\mathcal{D} = d/dt$, such equations can be written as:

$$\left[(m - Y_{\dot{v}})\mathcal{D}^2 - Y_v\mathcal{D} + E_{2y}\right]\Delta y + \left[-Y_{\dot{r}}\mathcal{D}^2 + (Y_{\dot{v}}U - Y_r)\mathcal{D} + E_{2\psi}\right]\Delta\psi = 0 , \tag{5.28}$$

$$\left[-N_{\dot{v}}\mathcal{D}^2 - N_v\mathcal{D} + E_{3y}\right]\Delta y + \left[(I_z - N_{\dot{r}})\mathcal{D}^2 + (N_{\dot{v}}U - N_r)\mathcal{D} + E_{3\psi}\right]\Delta\psi = 0 . \tag{5.29}$$

5.3. Stability Coefficients and Characteristic Equation

The characteristic equation for either Δy or $\Delta\psi$ derived from equations (5.28) and (5.29) is:

$$A\sigma^4 + B\sigma^3 + C\sigma^2 + D\sigma + E = 0 . \tag{5.30}$$

Expression (5.30) is a fourth-order characteristic equation of the form (1.1). The constants *A*-*E* are the Routh-Hurwitz coefficients for the fourth-order system, and are given by:

$$A = (m - Y_{\dot{v}})(I_z - N_{\dot{r}}) - N_{\dot{v}}\, Y_{\dot{r}} \ , \tag{5.31}$$

$$B = N_{\dot{v}}(mU - Y_r) - Y_v(I_z - N_{\dot{r}}) - N_r(m - Y_{\dot{v}}) - Y_{\dot{r}}\, N_v \ , \tag{5.32}$$

$$\begin{aligned} C = {} & N_v\, Y_{\dot{v}}\, U - Y_v(N_{\dot{v}}\, U - N_r) - N_v\, Y_r + (I_z - N_{\dot{r}})E_{2y} + N_{\dot{v}}\, E_{2\psi} \\ & + Y_{\dot{r}}\, E_{3y} + (m - Y_{\dot{v}})E_{3\psi} \ , \end{aligned} \tag{5.33}$$

$$D = (N_{\dot{v}}\, U - N_r)E_{2y} + N_v\, E_{2\psi} - (Y_{\dot{v}}\, U - Y_r)E_{3y} - Y_v\, E_{3\psi} \ , \tag{5.34}$$

$$E = E_{2y}\, E_{3\psi} - E_{3y}\, E_{2\psi} \ . \tag{5.35}$$

5.4. Stability Criteria for Symmetric Towing/Mooring Systems

In terms of the remaining eigenvalues, the quartic characteristic equation in σ can be written as:

$$A(\sigma - \sigma_3)(\sigma - \sigma_4)(\sigma - \sigma_5)(\sigma - \sigma_6) = 0 \ . \tag{5.36}$$

A symmetric towing/mooring is stable if all real parts of the four roots σ_3, σ_4, σ_5, and σ_6 are negative. Comparison between (5.30) and (5.36) produces the following relations between the Routh-Hurwitz coefficients and the roots of the fourth-order systems:

$$B/A = -(\sigma_3 + \sigma_4 + \sigma_5 + \sigma_6) \ , \tag{5.37}$$

$$C/A = \sigma_3\sigma_4 + \sigma_3\sigma_5 + \sigma_3\sigma_6 + \sigma_4\sigma_5 + \sigma_4\sigma_6 + \sigma_5\sigma_6 \ , \tag{5.38}$$

$$D/A = \sigma_3\sigma_4\sigma_5 + \sigma_3\sigma_4\sigma_6 + \sigma_3\sigma_5\sigma_6 + \sigma_4\sigma_5\sigma_6 \ , \tag{5.39}$$

$$E/A = \sigma_3\sigma_4\sigma_5\sigma_6 \ . \tag{5.40}$$

For stability, the necessary conditions are therefore $B/A > 0$, $C/A > 0$, $D/A > 0$ and $E/A > 0$. Following the theory presented in Chapter I, the set of necessary and sufficient conditions are compiled in the following four stability criteria:

$$C_{R1} = \frac{B}{A} > 0 \ , \tag{5.41}$$

$$C_{R2} = \frac{C}{A} - \frac{D}{B} > 0 \ , \tag{5.42}$$

$$C_{R3} = \frac{BCD - AD^2 - B^2E}{A(BC - AD)} > 0 \ , \tag{5.43}$$

$$C_{R4} = \frac{E}{A} > 0 \ . \tag{5.44}$$

Constants A and B are always greater than zero [14], and therefore the first stability criterion for symmetric systems (5.41) is always satisfied. This also implies, from equation (5.37), that the sum of the four roots of the characteristic equation (5.30) must be negative and real, and thus there must be at least one eigenvalue with negative real part. The maximum number of eigenvalues with positive real parts, therefore, cannot exceed three in symmetric towing and mooring systems.

5.5. Active Stability Criteria for Symmetric Systems

In symmetric systems, the four stability criteria (5.41)-(5.44) can be reduced into two dominant stability criteria [14] which are denoted by R_1 and R_2. These active criteria are recast in terms of the Routh-Hurwitz coefficients and the system eigenvalues as:

$$R_1 = \frac{E}{A} = \sigma_3 \sigma_4 \sigma_5 \sigma_6 \ , \tag{5.45}$$

$$R_2 = \frac{BCD - AD^2 - B^2E}{A^3} = \left[(\sigma_3 + \sigma_4)(\sigma_3 + \sigma_5)(\sigma_3 + \sigma_6)(\sigma_4 + \sigma_5)(\sigma_4 + \sigma_6)(\sigma_5 + \sigma_6)\right] \ . \tag{5.46}$$

The stability of the system depends exclusively on the signs of criteria R_1 and R_2. The necessary and sufficient conditions for stability in symmetric mooring become:

$$R_1 > 0 \,, \tag{5.47}$$

$$R_2 > 0 \,. \tag{5.48}$$

5.6. Loss of Stability in Symmetric Systems

As mentioned in Chapter IV, Static Loss of Stability (*SLS*) occurs when a real eigenvalue crosses from the negative to the positive real axis. This phenomenon can be represented analytically by setting criterion R_1 to zero. This expression is the product of the four eigenvalues of the system as shown by (5.45), and is the equivalent of (4.45) for general systems. setting expression (5.45) to zero, gives the necessary and sufficient condition for static loss of stability, i.e.

$$SLS = R_1 = 0 \,. \tag{5.49}$$

Also, as mentioned in Chapter IV, Dynamic Loss of Stability (*DLS*) occurs when a complex pair of eigenvalues crosses from the negative to the positive real axis. The boundary where *DLS* occurs is defined by making R_2 active (i.e. by setting R_2 to zero). This is shown in equation (5.46), in which R_2 consists of the product of six terms, each containing the sum of two roots, or eigenvalues, of the fourth-order system. This expression is equivalent to (4.48) for general systems, and provides a necessary condition for *DLS*, i.e.

$$DLS = R_2 = 0 \,. \tag{5.50}$$

Notes Regarding Static Loss of Stability (*SLS*)

As mentioned earlier in the chapter, static loss of stability corresponds to the fourth stability criterion (i.e. $R_1 = E/A = 0$). Since constant A is <u>always</u> positive, R_1 depends exclusively on the sign of E. Letting $R_1{}^* = E$, the expression for the first active criterion can be expanded to:

$$
\begin{aligned}
R_1{}^* = {} & N_v U \sum_{i=1}^{n} \left\{ \frac{\overline{T}^{(i)}}{\overline{\ell}^{(i)}} \cos^2 \overline{\gamma}^{(i)} + \frac{\overline{dT}^{(i)}}{d\ell^{(i)}} \sin^2 \overline{\gamma}^{(i)} \right\} \\
& - Y_v U \sum_{i=1}^{n} \left\{ \frac{\overline{T}^{(i)}}{\overline{\ell}^{(i)}} \cos \overline{\gamma}^{(i)} \left(x_p^{(i)} \cos \overline{\gamma}^{(i)} + y_p^{(i)} \sin \overline{\gamma}^{(i)} \right) \right. \\
& \qquad \left. + \frac{\overline{dT}^{(i)}}{d\ell^{(i)}} \sin \overline{\gamma}^{(i)} \left(x_p^{(i)} \sin \overline{\gamma}^{(i)} - y_p^{(i)} \cos \overline{\gamma}^{(i)} \right) \right\} \\
& + \sum_{i=1}^{n} \sum_{j=1}^{n} \left\{ \frac{\overline{T}^{(i)} \overline{T}^{(j)}}{\overline{\ell}^{(i)}} \cos^2 \overline{\gamma}^{(i)} \left(x_p^{(i)} \cos \overline{\gamma}^{(j)} + y_p^{(i)} \sin \overline{\gamma}^{(j)} \right) \right\} \\
& - \sum_{i=1}^{n} \sum_{j=1}^{n} \left\{ \frac{\overline{T}^{(i)} \overline{T}^{(j)}}{\overline{\ell}^{(i)}} \cos \overline{\gamma}^{(i)} \cos \overline{\gamma}^{(j)} \left(x_p^{(i)} \cos \overline{\gamma}^{(i)} + y_p^{(i)} \sin \overline{\gamma}^{(i)} \right) \right\} \\
& + \sum_{i=1}^{n} \sum_{j=1}^{n} \left\{ \frac{\overline{T}^{(i)} \overline{T}^{(j)}}{\overline{\ell}^{(i)} \overline{\ell}^{(j)}} \left[\cos \overline{\gamma}^{(i)} \left(x_p^{(j)} \cos \overline{\gamma}^{(j)} + y_p^{(j)} \sin \overline{\gamma}^{(j)} \right) \right]^2 \right\} \\
& - \sum_{i=1}^{n} \sum_{j=1}^{n} \left\{ \frac{\overline{T}^{(i)} \overline{T}^{(j)}}{\overline{\ell}^{(i)} \overline{\ell}^{(j)}} \cos \overline{\gamma}^{(i)} \cos \overline{\gamma}^{(j)} \left(x_p^{(i)} \cos \overline{\gamma}^{(i)} + y_p^{(i)} \sin \overline{\gamma}^{(i)} \right) \right. \\
& \qquad \left. \left(x_p^{(j)} \cos \overline{\gamma}^{(j)} + y_p^{(j)} \sin \overline{\gamma}^{(j)} \right) \right\} \\
& + \sum_{i=1}^{n} \sum_{j=1}^{n} \left\{ \overline{T}^{(i)} \frac{\overline{dT}^{(j)}}{d\ell^{(j)}} \sin^2 \overline{\gamma}^{(j)} \left(x_p^{(i)} \cos \overline{\gamma}^{(i)} + y_p^{(i)} \sin \overline{\gamma}^{(i)} \right) \right\} \\
& - \sum_{i=1}^{n} \sum_{j=1}^{n} \left\{ \overline{T}^{(i)} \frac{\overline{dT}^{(j)}}{d\ell^{(j)}} \cos \overline{\gamma}^{(i)} \sin \overline{\gamma}^{(j)} \left(x_p^{(j)} \sin \overline{\gamma}^{(j)} - y_p{}^{(j)} \sin \overline{\gamma}^{(j)} \right) \right\} \\
& + \sum_{i=1}^{n} \sum_{j=1}^{n} \left\{ \frac{\overline{T}^{(i)}}{\overline{\ell}^{(i)}} \frac{\overline{dT}^{(j)}}{d\ell^{(j)}} \left[\cos \overline{\gamma}^{(i)} \left(x_p^{(j)} \sin \overline{\gamma}^{(j)} - y_p^{(j)} \cos \overline{\gamma}^{(j)} \right) \right. \right. \\
& \qquad \left. \left. - \sin \overline{\gamma}^{(j)} \left(x_p^{(i)} \cos \overline{\gamma}^{(i)} + y_p^{(i)} \sin \overline{\gamma}^{(i)} \right) \right]^2 \right\} \\
& + \sum_{i=1}^{n} \sum_{j=1}^{n} \left\{ \frac{\overline{dT}^{(i)}}{d\ell^{(i)}} \frac{\overline{dT}^{(j)}}{d\ell^{(j)}} \left[\sin \overline{\gamma}^{(i)} \left(x_p^{(j)} \sin \overline{\gamma}^{(j)} - y_p{}^{(j)} \cos \overline{\gamma}^{(j)} \right) \right]^2 \right\} \\
& - \sum_{i=1}^{n} \sum_{j=1}^{n} \left\{ \frac{\overline{dT}^{(i)}}{d\ell^{(i)}} \frac{\overline{dT}^{(j)}}{d\ell^{(j)}} \sin \overline{\gamma}^{(i)} \sin \overline{\gamma}^{(j)} \left(x_p^{(i)} \sin \overline{\gamma}^{(i)} - y_p^{(i)} \cos \overline{\gamma}^{(i)} \right) \right. \\
& \qquad \left. \left(x_p^{(j)} \sin \overline{\gamma}^{(j)} - y_p^{(j)} \cos \overline{\gamma}^{(j)} \right) \right\} . \qquad (5.51)
\end{aligned}
$$

From above, $R_1{}^*$ is composed of 11 terms. Terms 3, 5, 7, 9 and 10 are always positive or zero. Furthermore, the sum of terms 3-11 is always greater or equal to zero [14]. The first two terms may be positive, negative or zero. For an unstable system in static loss, the sum of

the first two terms must be negative, irrespective of the value of terms 3-11. These two terms can further be recast as:

$$R_{1i}{}^* = \sum_{i=1}^{n}\left\{\left(N_v - Y_v\, x_p^{(i)}\right)U\left[\frac{\overline{T}^{(i)}}{\overline{\ell}^{(i)}}\cos^2\overline{\gamma}^{(i)} + \frac{\overline{dT}^{(i)}}{d\ell^{(i)}}\sin^2\overline{\gamma}^{(i)}\right]\right\}$$
$$+\sum_{i=1}^{n}\left\{Y_v\, U\left[\frac{\overline{dT}^{(i)}}{d\ell^{(i)}} - \frac{\overline{T}^{(i)}}{\overline{\ell}^{(i)}}\right]y_p^{(i)}\sin\overline{\gamma}^{(i)}\cos\overline{\gamma}^{(i)}\right\}. \qquad (5.52)$$

The term Y_v is always negative; N_v may be positive, negative or zero but small compared to Y_v in magnitude. In addition, the term $y_p \sin\gamma\cos\gamma$ is greater or equal to zero for lines attached forward of the *CG*, and less or equal to zero for lines attached aft the *CG*. Expression (5.52) shows that an originally statically unstable system may become stable by applying the following rules:

- For lines attached forward of the *CG*, increase x_p and/or decrease y_p.
- For lines attached aft the *CG*, increase y_p and/or decrease x_p.
- Increasing or decreasing the angle γ (or Ω) for either forward or aft lines may help an originally unstable system to stabilize depending on the relative position of the line(s) in terms of x_p and y_p.
- Increasing the distance between the towing/mooring terminals with respect to the vessel results in a reduction of the angle Ω and an increase in line tension. This approach will render, in general, an originally unstable equilibrium stable, and is widely used in practice. Cases for which this does not hold true are documented in [5], and generally occur for small values of x_p for lines attached forward and large values of x_p for lines attached aft the *CG*.

It must be noted, however, that a strongly statically stable system may undergo dynamic loss of stability, as shown by (5.46), where R_2 is proportional to the negative of $R_1{}^*$. Increasing the value of $R_1{}^*$ (and therefore producing a large positive value for $R_{1i}{}^*$) may ultimately make the system lose its dynamic stability.

5.7. Numerical Examples

The fourth-order stability criteria for symmetric systems of Sections 5.4 and 5.5 provide the same information as their sixth-order counterparts derived in Section 4.3. Table 5.1 shows the values of the fourth-order stability criteria, as well as the values for the dominant criteria R_1 and R_2 for the 3-line barge example considered in Section 4.5 about its symmetric equilibrium position (A). The Number of Sign Changes between the stability criteria are also shown on the table and are denoted as *NSC*.

Table 5.1: Fourth-order stability criteria for 3-line barge with skegs

Criterion	Equilibrium A
C_{R1}	2.24967
C_{R2}	1.72794
C_{R3}	2.45215
C_{R4}	−0.29891
R_1	$-1.73247\text{x}10^{-5}$
R_2	$+1.85604\text{x}10^{-12}$
NSC	1

As shown in the table, the number of sign changes between the fourth-order stability criteria is one. This corresponds to a statically unstable system, with one dimensional unstable manifold (i.e. one real positive eigenvalue), and is characterized by the negative value of R_1. This result agrees with those presented in Tables 4.1 and 4.2, which were obtained with eigenvalue analysis and the sixth-order stability criteria derived in Chapter IV, respectively.

Figure 5.3 shows the values of R_1 and R_2 as a function of the parameter x_p/L, which is varied simultaneously for all mooring lines from 0.0 to 0.5. These are scaled by setting their maximum values in the x_p/L range to 1.0.

As shown in Figure 5.3, the system is stable for $0.1292 < x_p/L < 0.3475$. In this range, both criteria are satisfied. Criterion R_2 is negative to the left of the lower stability boundary ($x_p/L < 0.1292$), indicating that the system oscillates about equilibrium A in this range. A Hopf bifurcation occurs at $x_p/L = 0.1292$. To the right of the upper stability boundary, ($x_p/L > 0.3475$), R_1 is negative, and thus the system diverges from equilibrium A. At the point $x_p/L = 0.3475$, R_1 is zero and a pitchfork bifurcation occurs.

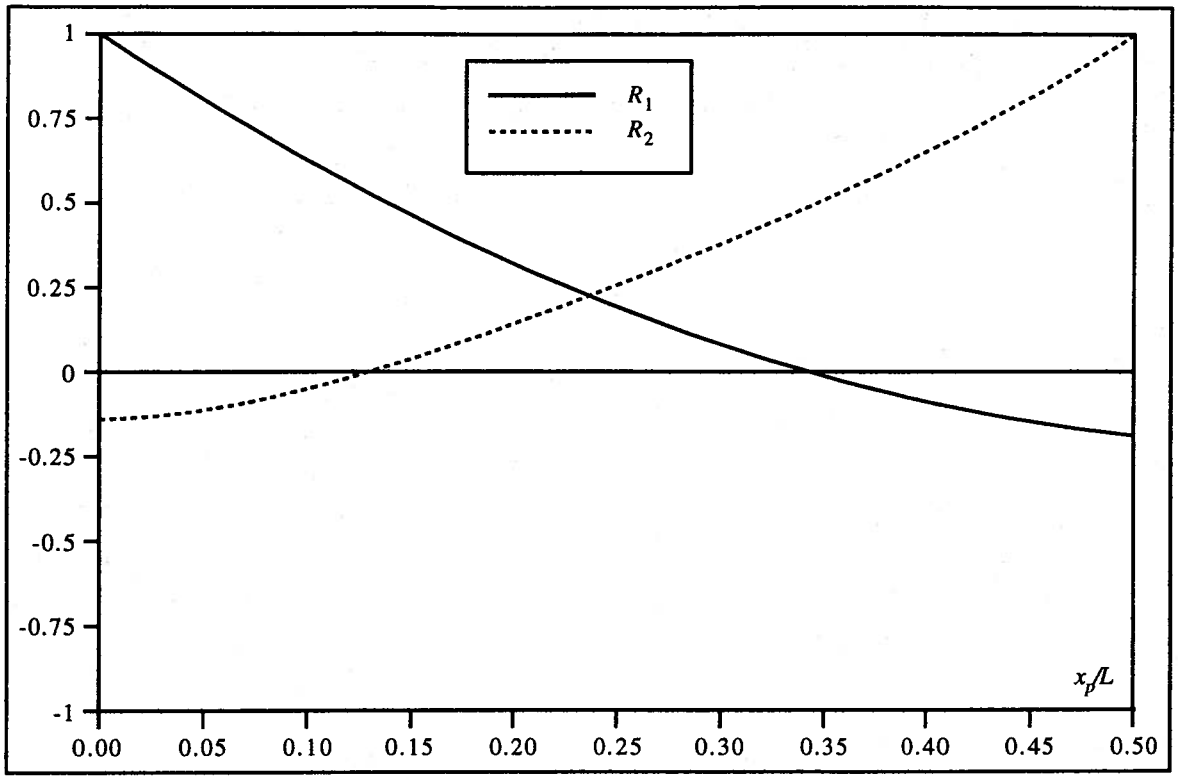

Figure 5.3: Values of R_1 and R_2, 3-line barge with skegs: $\ell_w/L = 0.5$, $y_p/B = 0.5$, $\Omega = 15°$, $E_I = 0.012$

The points in Figure 5.3 where static and dynamic loss of stability occur, agree with those obtained with the expressions for the bifurcation boundaries derived with the sixth-order stability criteria, as shown in Figure 4.1.

It is noteworthy that Figures 4.1 and 5.3 are practically the same in terms of the values of the bifurcation boundaries. This is due to the scaling of each figure. For the symmetric system of Figure 5.3, however, the signs of R_1 and R_2 determine whether or not the system is statically and/or dynamically unstable. The signs of the sixth-order expressions for C_{RS} and C_{RC} in Figure 4.1 do not necessarily imply stability/instability. Two complex pairs of eigenvalues with positive real parts, for example, would yield C_{RC} positive eventhough the system is dynamically unstable.

APPENDICES

APPENDIX 1. FIRST ORDER EXPANSION OF GEOMETRIC ANGLES

The angles involved in the geometry of a towing or mooring system (ψ,γ,ω) can be expanded about their equilibrium values $(\overline{\psi},\overline{\gamma},\overline{\omega})$ by perturbing to linear terms. Let

$$\psi = \overline{\psi} + \Delta\psi \ , \tag{A1.1}$$

$$\gamma = \overline{\gamma} + \Delta\gamma \ , \tag{A1.2}$$

$$\omega = \overline{\omega} + \Delta\omega \ . \tag{A1.3}$$

By applying standard trigonometric relations [9], the sine and cosine expansions for the angle ψ are given by:

$$\cos\psi = \cos(\overline{\psi} + \Delta\psi) = \cos\overline{\psi}\cos\Delta\psi - \sin\overline{\psi}\sin\Delta\psi \ , \tag{A1.4}$$

$$\sin\psi = \sin(\overline{\psi} + \Delta\psi) = \sin\overline{\psi}\cos\Delta\psi + \cos\overline{\psi}\sin\Delta\psi \ , \tag{A1.5}$$

Following relations (2.15)-(2.19), and applying the above equations (A1.4) and (A1.5), the sine and cosine expansions for the angle γ are written as:

$$\begin{aligned}\cos\gamma = \cos(\overline{\gamma} + \Delta\gamma) &= \frac{x_m - \overline{x} - \Delta x - x_p\cos(\overline{\psi} + \Delta\psi) + y_p\sin(\overline{\psi} + \Delta\psi)}{\overline{\ell} + \Delta\ell} \\ &= \frac{x_m - \overline{x} - \Delta x - x_p(\cos\overline{\psi}\cos\Delta\psi - \sin\overline{\psi}\sin\Delta\psi)}{\overline{\ell} + \Delta\ell} \\ &\quad + \frac{y_p(\sin\overline{\psi}\cos\Delta\psi + \cos\overline{\psi}\sin\Delta\psi)}{\overline{\ell} + \Delta\ell} ,\end{aligned} \tag{A1.6}$$

$$\begin{aligned}\sin\gamma = \sin(\overline{\gamma} + \Delta\gamma) &= \frac{y_m - \overline{y} - \Delta y - x_p\sin(\overline{\psi} + \Delta\psi) - y_p\cos(\overline{\psi} + \Delta\psi)}{\overline{\ell} + \Delta\ell} \\ &= \frac{y_m - \overline{y} - \Delta y - x_p(\sin\overline{\psi}\cos\Delta\psi + \cos\overline{\psi}\sin\Delta\psi)}{\overline{\ell} + \Delta\ell} \\ &\quad - \frac{y_p(\cos\overline{\psi}\cos\Delta\psi - \sin\overline{\psi}\sin\Delta\psi)}{\overline{\ell} + \Delta\ell} ,\end{aligned} \tag{A1.7}$$

Letting $\sin\Delta(\ ) \approx (\ )$, and $\cos\Delta(\ ) \approx 1$, expressions (A1.4)-(A1.7) reduce to:

$$\cos\psi \approx \cos\overline{\psi} - \sin\overline{\psi}\Delta\psi \ , \tag{A1.8}$$

$$\sin\psi \approx \sin\overline{\psi} + \cos\overline{\psi}\Delta\psi \ , \tag{A1.9}$$

$$\cos\gamma \approx \frac{x_m - \bar{x} - x_p\cos\overline{\psi} + y_p\sin\overline{\psi} - \Delta x + (x_p\sin\overline{\psi} + y_p\cos\overline{\psi})\Delta\psi}{\overline{\ell} + \Delta\ell} \ , \tag{A1.10}$$

$$\sin\gamma \approx \frac{y_m - \bar{y} - x_p\sin\overline{\psi} - y_p\cos\overline{\psi} - \Delta y - (x_p\cos\overline{\psi} - y_p\sin\overline{\psi})\Delta\psi}{\overline{\ell} + \Delta\ell} \ . \tag{A1.11}$$

The expansion for the angle ω can be obtained readily from relation (2.14), i.e.

$$\omega = 2\pi - \gamma + \psi \ , \tag{2.14}$$

which gives the following relations:

$$\cos\omega = \cos\gamma\cos\psi + \sin\gamma\sin\psi \ , \tag{A1.12}$$

$$\sin\omega = -\sin\gamma\cos\psi + \cos\gamma\sin\psi \ . \tag{A1.13}$$

Expanding the terms of each of the two expressions above and linearizing after expansion we arrive at:

$$\begin{aligned}\cos(\overline{\gamma} + \Delta\gamma)\cos(\overline{\psi} + \Delta\psi) = {} & \frac{\left(x_m - \bar{x} - x_p\cos\overline{\psi} + y_p\sin\overline{\psi}\right)\cos\overline{\psi}}{\overline{\ell} + \Delta\ell} - \frac{\cos\overline{\psi}}{\overline{\ell} + \Delta\ell}\Delta x \\ & + \frac{\left[\left(\bar{x} - x_m + 2x_p\cos\overline{\psi} - 2y_p\sin\overline{\psi}\right)\sin\overline{\psi} + y_p\right]}{\overline{\ell} + \Delta\ell}\Delta\psi \ ,\end{aligned} \tag{A1.14}$$

$$\begin{aligned}\sin(\overline{\gamma} + \Delta\gamma)\sin(\overline{\psi} + \Delta\psi) = {} & \frac{\left(y_m - \bar{y} - x_p\sin\overline{\psi} - y_p\cos\overline{\psi}\right)\sin\overline{\psi}}{\overline{\ell} + \Delta\ell} - \frac{\sin\overline{\psi}}{\overline{\ell} + \Delta\ell}\Delta y \\ & + \frac{\left[\left(y_m - \bar{y} - 2x_p\sin\overline{\psi} - 2y_p\cos\overline{\psi}\right)\cos\overline{\psi} + y_p\right]}{\overline{\ell} + \Delta\ell}\Delta\psi \ ,\end{aligned} \tag{A1.15}$$

$$\sin(\bar{\gamma}+\Delta\gamma)\cos(\bar{\psi}+\Delta\psi)=\frac{\left(y_m-\bar{y}-x_p\sin\bar{\psi}-y_p\cos\bar{\psi}\right)\cos\bar{\psi}}{\bar{\ell}+\Delta\ell}-\frac{\cos\bar{\psi}}{\bar{\ell}+\Delta\ell}\Delta y$$
$$+\frac{\left[\left(\bar{y}-y_m+2x_p\sin\bar{\psi}+2y_p\cos\bar{\psi}\right)\sin\bar{\psi}-x_p\right]}{\bar{\ell}+\Delta\ell}\Delta\psi\ , \qquad \text{(A1.16)}$$

$$\cos(\bar{\gamma}+\Delta\gamma)\sin(\bar{\psi}+\Delta\psi)=\frac{\left(x_m-\bar{x}-x_p\cos\bar{\psi}+y_p\sin\bar{\psi}\right)\sin\bar{\psi}}{\bar{\ell}+\Delta\ell}-\frac{\sin\bar{\psi}}{\bar{\ell}+\Delta\ell}\Delta x$$
$$+\frac{\left[\left(x_m-\bar{x}-2x_p\cos\bar{\psi}+2y_p\sin\bar{\psi}\right)\cos\bar{\psi}+x_p\right]}{\bar{\ell}+\Delta\ell}\Delta\psi\ . \qquad \text{(A1.17)}$$

Combining equations (A1.14)-(A1.17) with (A1.12) and (A1.13), the sine and cosine expressions for the angle ω are:

$$\cos\omega=-\left[\frac{(\bar{x}-x_m)\cos\bar{\psi}+(\bar{y}-y_m)\sin\bar{\psi}+x_p}{\bar{\ell}+\Delta\ell}\right]-\frac{\cos\bar{\psi}}{\bar{\ell}+\Delta\ell}\Delta x$$
$$-\frac{\sin\bar{\psi}}{\bar{\ell}+\Delta\ell}\Delta y+\frac{\left[(\bar{x}-x_m)\sin\bar{\psi}-(\bar{y}-y_m)\cos\bar{\psi}\right]}{\bar{\ell}+\Delta\ell}\Delta\psi\ , \qquad \text{(A1.18)}$$

$$\sin\omega=-\left[\frac{(\bar{x}-x_m)\sin\bar{\psi}-(\bar{y}-y_m)\cos\bar{\psi}-y_p}{\bar{\ell}+\Delta\ell}\right]-\frac{\sin\bar{\psi}}{\bar{\ell}+\Delta\ell}\Delta x$$
$$+\frac{\cos\bar{\psi}}{\bar{\ell}+\Delta\ell}\Delta y-\frac{\left[(\bar{x}-x_m)\cos\bar{\psi}+(\bar{y}-y_m)\sin\bar{\psi}\right]}{\bar{\ell}+\Delta\ell}\Delta\psi\ . \qquad \text{(A1.19)}$$

APPENDIX 2. FIRST ORDER VARIATION OF TOWING/MOORING LINE LENGTH

The horizontal component of the towing/mooring line length is perturbed about its equilibrium position as follows:

$$\ell = \bar{\ell} + \Delta\ell \ . \tag{A2.1}$$

where, from expression (2.17),

$$\begin{aligned}
\ell^2 &= (x_m - x_T)^2 + (y_m - y_T)^2 \\
&= \left[x_m - \bar{x} - \Delta x - x_p \cos(\bar{\psi} + \Delta\psi) + y_p \sin(\bar{\psi} + \Delta\psi)\right]^2 \\
&\quad + \left[y_m - \bar{y} - \Delta y - y_p \cos(\bar{\psi} + \Delta\psi) + x_p \sin(\bar{\psi} + \Delta\psi)\right]^2 \\
&= x_m{}^2 - 2\bar{x}x_m - 2x_m\,\Delta x - 2x_m\,x_p \cos\bar{\psi}\cos\Delta\psi + 2x_m\,x_p \sin\bar{\psi}\sin\Delta\psi \\
&\quad + 2x_m\,y_p\,\sin\bar{\psi}\cos\Delta\psi + 2x_m\,y_p \cos\bar{\psi}\sin\Delta\psi + \bar{x}^2 + 2\bar{x}\Delta x + \Delta x^2 \\
&\quad + 2x_p\,\bar{x}\cos\bar{\psi}\cos\Delta\psi + 2x_p\,\bar{x}\sin\bar{\psi}\sin\Delta\psi + 2x_p \cos\bar{\psi}\Delta x\cos\Delta\psi \\
&\quad - 2x_p\,\sin\bar{\psi}\Delta x\sin\Delta\psi - 2y_p\,\bar{x}\,\sin\bar{\psi}\cos\Delta\psi - 2y_p\,\bar{x}\cos\bar{\psi}\sin\Delta\psi \\
&\quad - 2y_p\,\sin\bar{\psi}\Delta x\,\cos\Delta\psi - 2y_p\,\cos\bar{\psi}\Delta x\,\sin\Delta\psi + y_m{}^2 - 2y_m\,\bar{y} - 2y_m\,\Delta y \\
&\quad - 2y_m\,x_p\,\sin\bar{\psi}\cos\Delta\psi - 2y_m\,x_p\,\cos\bar{\psi}\sin\Delta\psi - 2y_m\,y_p\,\cos\bar{\psi}\cos\Delta\psi \\
&\quad + 2y_m\,y_p\,\sin\bar{\psi}\sin\Delta\psi + \bar{y}^2 + 2\bar{y}\,\Delta y + \Delta y^2 + 2x_p\,\bar{y}\sin\bar{\psi}\cos\Delta\psi \\
&\quad + 2x_p\,\bar{y}\cos\bar{\psi}\sin\Delta\psi + 2x_p\,\sin\bar{\psi}\Delta y\cos\Delta\psi + 2x_p\,\cos\bar{\psi}\Delta y\sin\Delta\psi \\
&\quad + 2y_p\,\bar{y}\cos\bar{\psi}\cos\Delta\psi - 2y_p\,\bar{y}\sin\bar{\psi}\sin\Delta\psi + 2y_p\,\cos\bar{\psi}\Delta y\cos\Delta\psi \\
&\quad - 2y_p\,\sin\bar{\psi}\,\Delta y\sin\Delta\psi + x_p{}^2 + y_p{}^2 \\
&= \left(\bar{\ell}^2 + 2\bar{\ell}\Delta\ell + \Delta\ell^2\right) .
\end{aligned} \tag{A2.2}$$

Letting $\cos\Delta\psi \approx 1$ and $\sin\Delta\psi \approx \Delta\psi$, and ignoring nonlinear terms in Δ, the expression above can be expanded as:

$$\begin{aligned}
\bar{\ell}^2 + 2\bar{\ell}\Delta\ell \approx\ & x_m{}^2 - 2x_m\,\bar{x} - 2x_m\,\Delta x - 2x_m\,x_p \cos\bar{\psi} + 2x_m\,x_p \sin\bar{\psi}\,\Delta\psi \\
& + 2x_m\,y_p \sin\bar{\psi} + 2x_m\,y_p \cos\bar{\psi}\,\Delta\psi + \bar{x}^2 + 2\bar{x}\Delta x + 2x_p\,\bar{x}\cos\bar{\psi} \\
& - 2x_p\,\bar{x}\sin\bar{\psi}\,\Delta\psi + 2x_p \cos\bar{\psi}\,\Delta x - 2y_p\,\bar{x}\sin\bar{\psi} - 2y_p \sin\bar{\psi}\,\Delta x
\end{aligned}$$

$$
\begin{aligned}
&-2y_p\,\bar{x}\cos\bar{\psi}\Delta\psi + y_m{}^2 - 2y_m\,\bar{y} - 2y_m\,\Delta y - 2y_m\,x_p\sin\bar{\psi} \\
&-2y_m\,x_p\cos\bar{\psi}\Delta\psi - 2y_m\,y_p\cos\bar{\psi} + 2y_m\,y_p\sin\bar{\psi}\Delta\psi + \bar{y}^2 \\
&+2\bar{y}\,\Delta y + 2x_p\,\bar{y}\sin\bar{\psi} + 2x_p\,\bar{y}\cos\bar{\psi}\,\Delta\psi + 2x_p\sin\bar{\psi}\Delta\psi \\
&+2y_p\,\bar{y}\cos\bar{\psi} - 2y_p\,\bar{y}\sin\bar{\psi}\Delta\psi + 2y_p\cos\bar{\psi}\,\Delta y + x_p{}^2 + y_p{}^2 \ , \qquad \text{(A2.3)}
\end{aligned}
$$

where

$$
\begin{aligned}
\bar{\ell}^2 = {} & x_m{}^2 - 2x_m\bar{x} + \bar{x}^2 - 2x_m\,x_p\cos\bar{\psi} + 2x_m\,y_p\sin\bar{\psi} + 2x_p\,\bar{x}\cos\bar{\psi} \\
& -2y_p\bar{x}\sin\bar{\psi} + x_p{}^2 + y_p{}^2 + y_m{}^2 - 2\bar{y}\,y_m - 2y_m\,y_p\cos\bar{\psi} + \bar{y}^2 \\
& -2x_p\,y_m\sin\bar{\psi} + 2y_p\,\bar{y}\cos\bar{\psi} + 2x_p\,\bar{y}\sin\bar{\psi} \ , \qquad \text{(A2.4)}
\end{aligned}
$$

and

$$
\begin{aligned}
2\bar{\ell}\Delta\ell \approx {} & -2x_m\,\Delta x + 2x_m\,x_p\sin\bar{\psi}\,\Delta\psi + 2x_p\sin\bar{\psi}\,\Delta y - 2x_p\,\bar{x}\sin\bar{\psi}\,\Delta\psi \\
& +2y_p\,y_m\sin\bar{\psi}\,\Delta\psi - 2y_p\,\bar{y}\sin\bar{\psi}\,\Delta\psi - 2y_p\sin\bar{\psi}\,\Delta x + 2\bar{x}\Delta x \\
& +2x_m\,y_p\cos\bar{\psi}\,\Delta\psi + 2x_p\cos\bar{\psi}\,\Delta x - 2y_p\,\bar{x}\cos\bar{\psi}\,\Delta y - 2y_m\,\Delta y \\
& -2y_m\,x_p\cos\bar{\psi}\,\Delta\psi + 2\bar{y}\Delta y + 2x_p\bar{y}\cos\bar{\psi}\,\Delta\psi + 2y_p\cos\bar{\psi}\,\Delta y \ . \qquad \text{(A2.5)}
\end{aligned}
$$

Relation (A2.5) above gives the expression for $\Delta\ell$ in terms of the position vector $(\Delta x, \Delta y, \Delta\psi)$ by:

$$
\begin{aligned}
\Delta\ell \approx {} & \left(\frac{\left(\bar{x} - x_m + x_p\cos\bar{\psi} - y_p\sin\bar{\psi}\right)}{\bar{\ell}}\right)\Delta x + \left(\frac{\left(\bar{y} - y_m + x_p\sin\bar{\psi} - y_p\cos\bar{\psi}\right)}{\bar{\ell}}\right)\Delta y \\
& + \left\{\frac{\left[x_p(\bar{y} - y_m) - y_p(\bar{x} - x_m)\right]\cos\bar{\psi} - \left[x_p(\bar{x} - x_m) + y_p(\bar{y} - y_m)\right]\sin\bar{\psi}}{\bar{\ell}}\right\}\Delta\psi \ . \qquad \text{(A2.6)}
\end{aligned}
$$

From relations (2.18) and (2.19), the equation above can be reduced further to:

$$
\boxed{
\begin{aligned}
\Delta\ell &\approx \frac{(\bar{x}_T - x_m)}{\bar{\ell}}\Delta x + \frac{(\bar{y}_T - y_m)}{\bar{\ell}}\Delta y + \frac{\left[(\bar{x} - x_m)(\bar{y} - y_T) - (\bar{y} - y_m)(\bar{x} - x_T)\right]}{\bar{\ell}}\Delta\psi \\
&= -\cos\bar{\gamma}\,\Delta x - \sin\bar{\gamma}\,\Delta y + \left(x_p\sin\bar{\omega} + y_p\cos\bar{\omega}\right)\Delta\psi \\
&= \frac{\partial\bar{\ell}}{\partial x}\Delta x + \frac{\partial\bar{\ell}}{\partial y}\Delta y + \frac{\partial\bar{\ell}}{\partial\psi}\Delta\psi \ . \qquad \text{(A2.7)}
\end{aligned}
}
$$

APPENDIX 3. FIRST ORDER VARIATION OF TOWING/MOORING LINE TENSION

The first order perturbation for the towing/mooring line tension is obtained as follows:

$$T = \overline{T} + \Delta T \ . \tag{A3.1}$$

The term ΔT can be obtained as a function of the towing/mooring line length perturbation $\Delta\ell$, which, as shown by (A2.7), it is a function of the position vector $(\Delta x, \Delta y, \Delta\psi)$. Following the Taylor Series Expansion:

$$f(x) = f(x_o) + \left.\frac{\partial f}{\partial x}\right|_{x=x_o} (x - x_o) \ + \frac{1}{2}\left.\frac{\partial^2 f}{\partial x_2}\right|_{x=x_o} (x - x_o)^2 \ + \ \ldots\ldots \ , \tag{A3.2}$$

the line tension can be expanded about the equilibrium length $\overline{\ell}$ as follows:

$$\begin{aligned} T &= T(\overline{\ell}) + \left.\frac{\partial T}{\partial \ell}\right|_{\ell=\overline{\ell}} (\ell - \overline{\ell}) \ + \ \ldots\ldots \\ &= \overline{T} + \frac{\overline{\Delta T}}{\Delta \ell}\Delta\ell \quad \text{or} \quad \overline{T} + \frac{\overline{dT}}{d\ell}\Delta\ell \ . \end{aligned} \tag{A3.3}$$

For the nonlinear elastic string

$$\overline{T} = S_b p \left(\frac{\overline{\ell} - \ell_w}{\ell_w}\right)^q \ , \tag{A3.4}$$

with

$$\frac{\Delta T}{\Delta \ell} = -S_b p \left(\frac{1}{\ell_w}\right)^q (\overline{\ell} - \ell_w)^{q-1} \ , \tag{A3.5}$$

and therefore

$$\boxed{\Delta T = -S_b p \left(\frac{1}{\ell_w}\right)^q \left(\bar{\ell} - \ell_w\right)^{q-1} \Delta\ell \ .} \qquad \text{(A3.6)}$$

For the inextensible catenary, the expression for the equilibrium tension can be obtained by solving the equation:

$$\sinh\left(\frac{P\bar{\ell}}{2\bar{T}}\right) = \frac{P\bar{\ell}}{2\bar{T}}\left[\frac{\sqrt{\ell_w^2 - h^2}}{\bar{\ell}}\right] . \qquad \text{(A3.7)}$$

Once the equilibrium tension $\bar{T}$ is found, the first derivative of the tension with respect to the towing/mooring line length evaluated at equilibrium is given by

$$\frac{\Delta T}{\Delta\ell} = \frac{\frac{P}{2}\cosh\left(\frac{P\bar{\ell}}{2\bar{T}}\right)}{\left(\frac{P\bar{\ell}}{2\bar{T}}\right)\cosh\left(\frac{P\bar{\ell}}{2\bar{T}}\right) - \sinh\left(\frac{P\bar{\ell}}{2\bar{T}}\right)} , \qquad \text{(A3.8)}$$

and, thus,

$$\boxed{\Delta T = \frac{\frac{P}{2}\cosh\left(\frac{P\bar{\ell}}{2\bar{T}}\right)}{\left(\frac{P\bar{\ell}}{2\bar{T}}\right)\cosh\left(\frac{P\bar{\ell}}{2\bar{T}}\right) - \sinh\left(\frac{P\bar{\ell}}{2\bar{T}}\right)} \Delta\ell \ .} \qquad \text{(A3.9)}$$

APPENDIX 4. FIRST ORDER VARIATION OF VESSEL VELOCITIES AND ACCELERATIONS IN TERMS OF THE ABSOLUTE POSITION VECTOR AND ITS DERIVATIVES

The kinematic relations between the absolute position vector and its derivatives, and the vesel velocities at equilibrium are given by relations (2.11)-(2.13) and (3.10)-(3.12) respectively as follows:

Kinematic relations:

$$\dot{x} = u\cos\psi - v\sin\psi - U \ , \qquad (2.11)$$

$$\dot{y} = v\cos\psi + u\sin\psi \ , \qquad (2.12)$$

$$\dot{\psi} = r \ , \qquad (2.13)$$

Equilibrium conditions:

$$\bar{u} = U\cos\bar{\psi} \ , \qquad (3.10)$$

$$\bar{v} = -U\sin\bar{\psi} \ , \qquad (3.11)$$

$$\bar{r} = 0 \ . \qquad (3.12)$$

The first order expansions of the absolute position, velocity and acceleration vectors are given by:

$$x = \bar{x} + \Delta x, \quad \dot{x} = \Delta\dot{x}, \quad \ddot{x} = \Delta\ddot{x} \ , \qquad (A4.1)$$

$$y = \bar{y} + \Delta y, \quad \dot{y} = \Delta\dot{y}, \quad \ddot{y} = \Delta\ddot{y} \ , \qquad (A4.2)$$

$$\psi = \bar{\psi} + \Delta\psi, \quad \dot{\psi} = \Delta\dot{\psi}, \quad \ddot{\psi} = \Delta\ddot{\psi} \ , \qquad (A4.3)$$

and the first order expansions of the vessel velocities and accelerations are:

$$u = \bar{u} + \Delta u, \quad \dot{u} = \Delta\dot{u} \ , \qquad (A4.4)$$

$$v = \bar{v} + \Delta v, \quad \dot{v} = \Delta\dot{v} \ , \qquad (A4.5)$$

$$r = \bar{r} + \Delta r, \quad \dot{r} = \Delta\dot{r} \ . \qquad (A4.6)$$

Equations (2.11)-(2.13), can be expanded by using small angle theory (i.e. $\cos\Delta\psi \approx 1$, $\sin\Delta\psi \approx \Delta\psi$), and linearizing as follows:

$$\Delta\dot{x} \approx \cos\overline{\psi}\ \Delta u - \sin\overline{\psi}\ \Delta v - (\overline{u}\sin\overline{\psi} + \overline{v}\cos\overline{\psi})\Delta\psi + \overline{u}\cos\overline{\psi} - \overline{v}\sin\overline{\psi} - U\ , \tag{A4.7}$$

$$\Delta\dot{y} \approx \sin\overline{\psi}\ \Delta u + \cos\overline{\psi}\ \Delta v + (\overline{u}\cos\overline{\psi} - \overline{v}\sin\overline{\psi})\Delta\psi + \overline{u}\sin\overline{\psi} + \overline{v}\cos\overline{\psi}\ , \tag{A4.8}$$

$$\Delta\dot{\psi} = \overline{r} + \Delta r\ . \tag{A4.9}$$

Noticing that $\overline{u}\cos\overline{\psi} - \overline{v}\sin\overline{\psi} - U = \dot{\overline{x}} = 0$, and that $\overline{u}\sin\overline{\psi} + \overline{v}\cos\overline{\psi} = \dot{\overline{y}} = 0$, we have

$$\Delta\dot{x} \approx \cos\overline{\psi}\Delta u - \sin\overline{\psi}\Delta v\ , \tag{A4.10}$$

$$\Delta\dot{y} \approx \sin\overline{\psi}\Delta u + \cos\overline{\psi}\Delta v + U\Delta\psi\ . \tag{A4.11}$$

Combining equations (A4.9)-(A4.11), and substituting relations (3.10)-(3.12) the expressions for the first order variations of the vessel velocities in terms of the absolute position and velocity vector are given by:

$$\boxed{\begin{aligned} &\Delta u \approx \cos\overline{\psi}\ \Delta\dot{x} + \sin\overline{\psi}\ \Delta\dot{y} + \overline{v}\Delta\psi\ , && \text{(A4.12)}\\ &\Delta v \approx -\sin\overline{\psi}\ \Delta\dot{x} + \cos\overline{\psi}\ \Delta\dot{y} - \overline{u}\Delta\psi\ , && \text{(A4.13)}\\ &\Delta r = \Delta\dot{\psi}\ . && \text{(A4.14)}\end{aligned}}$$

Similarly, the acceleration terms for the vessel are given by:

$$\boxed{\begin{aligned} &\Delta\dot{u} \approx \cos\overline{\psi}\ \Delta\ddot{x} + \sin\overline{\psi}\ \Delta\ddot{y} + \overline{v}\Delta\dot{\psi}\ , && \text{(A4.15)}\\ &\Delta\dot{v} \approx -\sin\overline{\psi}\ \Delta\ddot{x} + \cos\overline{\psi}\ \Delta\ddot{y} - \overline{u}\Delta\dot{\psi}\ . && \text{(A4.16)}\\ &\Delta\dot{r} = \Delta\ddot{\psi}\ . && \text{(A4.17)}\end{aligned}}$$

APPENDIX 5. FIRST ORDER VARIATION OF HYDRODYNAMIC FORCES AND MOMENT IN TERMS OF THE ABSOLUTE POSITION VECTOR AND ITS TIME DERIVATIVES

The velocity dependent hydrodynamic forces and moment (2.4)-(2.6) are expanded about their equilibrium values $(\overline{X},\overline{Y},\overline{N})$ as:

$$X(u,v,r) = \overline{X} + \Delta X \ , \tag{A5.1}$$

$$Y(u,v,r) = \overline{Y} + \Delta Y \ , \tag{A5.2}$$

$$N(u,v,r) = \overline{N} + \Delta N \ . \tag{A5.3}$$

For purposes of general towing and mooring systems, the rudder is considered to be fixed in space and time (i.e. $\Delta\delta = 0$), and is not considered in this report For the sake of completeness, however, variations in δ can be taken into account such that

$$\delta = \overline{\delta} + \Delta\delta \ , \tag{A5.4}$$

and the forces and moment can be recast as functions of the velocity vector and the rudder angle as

$X = X(u,v,r,\delta)$, $Y = Y(u,v,r,\delta)$, and $N = N(u,v,r,\delta)$.

The first order expansion of the hydrodynamic forces and moment are carried out by expanding out the terms in equations (2.4)-(2.6), and keeping the linear terms in the velocity/rudder angle products as follows:

$$u^2 = \overline{u}^2 + 2\overline{u}\,\Delta u + \text{H.O.T.} \ , \tag{A5.5}$$

$$u^3 = \overline{u}^3 + 3\overline{u}^2\,\Delta u + \text{H.O.T.} \ , \tag{A5.6}$$

$$v^2 = \overline{v}^2 + 2\overline{v}\,\Delta v + \text{H.O.T.} \ , \tag{A5.7}$$

$$v^3 = \overline{v}^3 + 3\overline{v}^2\,\Delta v + \text{H.O.T.} \ , \tag{A5.8}$$

$$uv = \bar{u}\bar{v} + \bar{v}\,\Delta u + \bar{u}\,\Delta v + \text{H.O.T.}\ , \tag{A5.9}$$

$$u^2 v = \bar{u}^2\bar{v} + 2\bar{u}\bar{v}\,\Delta u + \bar{u}^2\,\Delta v + \text{H.O.T.}\ , \tag{A5.10}$$

$$uv^2 = \bar{u}\bar{v}^2 + \bar{v}^2\,\Delta u + 2\bar{u}\bar{v}\,\Delta v + \text{H.O.T.}\ , \tag{A5.11}$$

$$r^2 = \text{H.O.T.}\ , \tag{A5.12}$$

$$r^3 = \text{H.O.T.}\ , \tag{A5.13}$$

$$ur = \bar{u}\,\Delta r + \text{H.O.T.}\ , \tag{A5.14}$$

$$vr = \bar{v}\,\Delta r + \text{H.O.T.}\ , \tag{A5.15}$$

$$uvr = \bar{u}\bar{v}\,\Delta r + \text{H.O.T.}\ , \tag{A5.16}$$

$$ru^2 = \bar{u}^2\,\Delta r + \text{H.O.T.}\ , \tag{A5.17}$$

$$rv^2 = \bar{v}^2\,\Delta r + \text{H.O.T.}\ , \tag{A5.18}$$

$$r^2 u = \text{H.O.T.}\ , \tag{A5.19}$$

$$r^2 v = \text{H.O.T.}\ , \tag{A5.20}$$

$$\delta^2 = \bar{\delta}^2 + 2\bar{\delta}\Delta\delta + \text{H.O.T.}\ , \tag{A5.21}$$

$$\delta u = \bar{u}\bar{\delta} + \bar{\delta}\Delta u + \bar{u}\Delta\delta + \text{H.O.T.}\ , \tag{A5.22}$$

$$\delta v = \bar{v}\bar{\delta} + \bar{\delta}\Delta v + \bar{v}\Delta\delta + \text{H.O.T.}\ , \tag{A5.23}$$

$$\delta r = \bar{\delta}\Delta r + \text{H.O.T.}\ , \tag{A5.24}$$

$$\delta^2 u = \bar{u}\bar{\delta}^2 + \bar{\delta}^2\Delta u + 2\bar{u}\bar{\delta}\,\Delta\delta + \text{H.O.T.}\ , \tag{A5.25}$$

$$\delta^2 v = \bar{v}\bar{\delta}^2 + \bar{\delta}^2\Delta v + 2\bar{v}\bar{\delta}\,\Delta\delta + \text{H.O.T.}\ , \tag{A5.26}$$

$$\delta^2 r = \bar{\delta}^2 \Delta r + \text{H.O.T.} \ , \tag{A5.27}$$

$$\delta^3 = \bar{\delta}^3 + 3\bar{\delta}^2 \, \Delta\delta + \text{H.O.T.} \ , \tag{A5.28}$$

$$\delta u^2 = \bar{u}^2 \bar{\delta} + 2\bar{u}\bar{\delta} \, \Delta u + \bar{u}^2 \, \Delta\delta + \text{H.O.T.} \ , \tag{A5.29}$$

$$\delta v^2 = \bar{v}^2 \bar{\delta} + 2\bar{v}\bar{\delta} \, \Delta v + \bar{v}^2 \, \Delta\delta + \text{H.O.T.} \ , \tag{A5.30}$$

$$\delta r^2 = \text{H.O.T.} \ , \tag{A5.31}$$

$$v\delta u = \bar{u}\bar{v}\bar{\delta} + \bar{\delta}(\bar{v}\Delta u + \bar{u}\Delta v) + \bar{u}\bar{v}\Delta\delta + \text{H.O.T.} \ , \tag{A5.32}$$

$$r\delta u = \bar{u}\bar{\delta}\Delta r + \text{H.O.T.} \ , \tag{A5.33}$$

$$r\delta v = \bar{v}\bar{\delta}\Delta r + \text{H.O.T.} \ . \tag{A5.34}$$

The hydrodynamic forces and moment evaluated at equilibrium are:

$$\begin{aligned}\bar{X} = {} & X_o + X_u \bar{u} + \frac{1}{2} X_{uu} \bar{u}^2 + \frac{1}{6} X_{uuu} \bar{u}^3 + \frac{1}{2} X_{vv} \bar{v}^2 + \frac{1}{2} X_{\delta\delta} \bar{\delta}^2 + \frac{1}{2} X_{vvu} \bar{u}\bar{v}^2 \\ & + \frac{1}{2} X_{\delta\delta u} \bar{u}\bar{\delta}^2 + X_{v\delta} \bar{v}\bar{\delta} + X_{v\delta u} \bar{u}\bar{v}\bar{\delta} \ ,\end{aligned} \tag{A5.35}$$

$$\begin{aligned}\bar{Y} = {} & Y_o + Y_{ou} \bar{u} + \frac{1}{2} Y_{ouu} \bar{u}^2 + Y_v \bar{v} + \frac{1}{6} Y_{vvv} \bar{v}^3 + \frac{1}{2} Y_{v\delta\delta} \bar{v}\bar{\delta}^2 + Y_{vu} \bar{u}\bar{v} \\ & + \frac{1}{2} Y_{vuu} \bar{u}^2\bar{v} + Y_\delta \bar{\delta} + \frac{1}{6} Y_{\delta\delta\delta} \bar{\delta}^3 + \frac{1}{2} Y_{\delta vv} \bar{v}^2\bar{\delta} + Y_{\delta u} \bar{u}\bar{\delta} + \frac{1}{2} Y_{\delta uu} \bar{u}^2\bar{\delta} \ ,\end{aligned} \tag{A5.36}$$

$$\begin{aligned}\bar{N} = {} & N_o + N_{ou} \bar{u} + \frac{1}{2} N_{ouu} \bar{u}^2 + N_v \bar{v} + \frac{1}{6} N_{vvv} \bar{v}^3 + \frac{1}{2} N_{v\delta\delta} \bar{v}\bar{\delta}^2 + N_{vu} \bar{u}\bar{v} \\ & + \frac{1}{2} N_{vuu} \bar{u}^2\bar{v} + N_\delta \bar{\delta} + \frac{1}{6} N_{\delta\delta\delta} \bar{\delta}^3 + \frac{1}{2} N_{\delta vv} \bar{v}^2\bar{\delta} + N_{\delta u} \bar{u}\bar{\delta} + \frac{1}{2} N_{\delta uu} \bar{u}^2\bar{\delta} \ .\end{aligned} \tag{A5.37}$$

The first order variation for the surge hydrodynamic force is:

$$\Delta X = X_u \, \Delta u + X_{uu} \, \bar{u} \, \Delta u + \frac{1}{2} X_{uuu} \, \bar{u}^2 \, \Delta u + X_{vv} \, \bar{v} \, \Delta v + X_{\delta\delta} \, \bar{\delta} \, \Delta\delta$$

$$
\begin{aligned}
&+\frac{1}{2}X_{vvu}\,\bar{v}\left(\bar{v}\,\Delta u+2\bar{u}\,\Delta v\right)+\frac{1}{2}X_{\delta\delta u}\,\bar{\delta}\left(\bar{\delta}\,\Delta u+2\bar{u}\,\Delta\delta\right)+X_{vr}\,\bar{v}\,\Delta r\\
&+X_{v\delta}\left(\bar{\delta}\,\Delta v+\bar{v}\,\Delta\delta\right)+X_{r\delta}\,\bar{\delta}\,\Delta r+X_{vru}\,\bar{u}\bar{v}\,\Delta r\\
&+X_{v\delta u}\left\{\bar{\delta}\left(\bar{v}\,\Delta u+\bar{u}\,\Delta v\right)+\bar{u}\bar{v}\,\Delta\delta\right\}+X_{r\delta u}\,\bar{u}\bar{\delta}\,\Delta r\\
&=\frac{\overline{\partial X}}{\partial u}\Delta u+\frac{\overline{\partial X}}{\partial v}\Delta v+\frac{\overline{\partial X}}{\partial r}\Delta r+\frac{\overline{\partial X}}{\partial \delta}\Delta\delta\ ,
\end{aligned}
\tag{A5.38}
$$

where

$$
\frac{\overline{\partial X}}{\partial u}=X_u+X_{uu}\,\bar{u}+\frac{1}{2}X_{uuu}\,\bar{u}^2+\frac{1}{2}X_{vvu}\,\bar{v}^2+\frac{1}{2}X_{\delta\delta u}\,\bar{\delta}^2+X_{v\delta u}\,\bar{v}\bar{\delta}\ , \tag{A5.39}
$$

$$
\frac{\overline{\partial X}}{\partial v}=X_{vv}\,\bar{v}+X_{vvu}\,\bar{u}\bar{v}+X_{v\delta}\,\bar{\delta}+X_{v\delta u}\,\bar{u}\bar{\delta}\ , \tag{A5.40}
$$

$$
\frac{\overline{\partial X}}{\partial r}=X_{vr}\,\bar{v}+X_{r\delta}\,\bar{\delta}+X_{vru}\,\bar{u}\bar{v}+X_{r\delta u}\,\bar{u}\bar{\delta}\ , \tag{A5.41}
$$

$$
\frac{\overline{\partial X}}{\partial \delta}=X_{\delta\delta}\,\bar{\delta}+X_{\delta\delta u}\,\bar{u}\bar{\delta}+X_{v\delta}\,\bar{v}+X_{v\delta u}\,\bar{u}\bar{v}\ , \tag{A5.42}
$$

In terms of $\Delta\dot{x}$, $\Delta\dot{y}$, $\Delta\dot{\psi}$, $\Delta\psi$ and $\Delta\delta$, the surge hydrodynamic force first order variation is:

$$
\boxed{
\begin{aligned}
\Delta X=&\left[\frac{\overline{\partial X}}{\partial u}\cos\bar{\psi}-\frac{\overline{\partial X}}{\partial v}\sin\bar{\psi}\right]\Delta\dot{x}+\left[\frac{\overline{\partial X}}{\partial u}\sin\bar{\psi}+\frac{\overline{\partial X}}{\partial v}\cos\bar{\psi}\right]\Delta\dot{y}\\
&+\left[\frac{\overline{\partial X}}{\partial u}\bar{v}-\frac{\overline{\partial X}}{\partial v}\bar{u}\right]\Delta\psi+\frac{\overline{\partial X}}{\partial r}\Delta\dot{\psi}+\frac{\overline{\partial X}}{\partial \delta}\Delta\delta\ .
\end{aligned}
}
\tag{A5.43}
$$

The first order variation for the sway hydrodynamic force is:

$$
\begin{aligned}
\Delta Y=&\,Y_{ou}+Y_{ouu}\,\bar{u}\,\Delta u+Y_v\,\Delta v+\frac{1}{2}Y_{vvv}\,\bar{v}^2\,\Delta v+\frac{1}{2}Y_{v\delta\delta}\,\bar{\delta}\left(\bar{\delta}\Delta v+2\bar{v}\,\Delta\delta\right)\\
&+Y_{vu}\left(\bar{v}\,\Delta u+\bar{u}\,\Delta v\right)+\frac{1}{2}Y_{vuu}\,\bar{u}\left(2\bar{v}\,\Delta u+\bar{u}\,\Delta v\right)+Y_r\,\Delta r\\
&+\frac{1}{2}Y_{rvv}\,\bar{v}^2\,\Delta r+\frac{1}{2}Y_{r\delta\delta}\,\bar{\delta}^2\,\Delta r+Y_{ru}\,\bar{u}\,\Delta r+\frac{1}{2}Y_{ruu}\,\bar{u}^2\,\Delta r+Y_\delta\,\Delta\delta
\end{aligned}
$$

$$+\frac{1}{2}Y_{\delta\delta\delta}\,\bar{\delta}^2\,\Delta\delta+\frac{1}{2}Y_{\delta vv}\,\bar{v}\left(2\bar{\delta}\,\Delta v+\bar{v}\,\Delta\delta\right)+Y_{\delta u}\left(\bar{\delta}\,\Delta u+\bar{u}\,\Delta\delta\right)$$
$$+\frac{1}{2}Y_{\delta uu}\,\bar{u}\left[2\bar{\delta}\,\Delta u+\bar{u}\,\Delta\delta\right]+Y_{vr\delta}\,\bar{v}\bar{\delta}\,\Delta r$$
$$=\frac{\overline{\partial Y}}{\partial u}\Delta u+\frac{\overline{\Delta Y}}{\partial v}\Delta v+\frac{\overline{\partial Y}}{\partial r}\Delta r+\frac{\partial Y}{\partial \delta}\Delta\delta\ , \tag{A5.44}$$

where

$$\frac{\overline{\partial Y}}{\partial u}=Y_{ou}+Y_{ouu}\,\bar{u}+Y_{vu}\,\bar{v}+Y_{vuu}\,\bar{u}\bar{v}+Y_{\delta u}\,\bar{\delta}+Y_{\delta uu}\,\bar{u}\bar{\delta}\ , \tag{A5.45}$$

$$\frac{\overline{\partial Y}}{\partial v}=Y_v+\frac{1}{2}Y_{vvu}\,\bar{v}^2+\frac{1}{2}Y_{v\delta\delta}\,\bar{\delta}^2+Y_{vu}\,\bar{u}+\frac{1}{2}Y_{vuu}\,\bar{u}^2+Y_{\delta vv}\,\bar{v}\bar{\delta}\ , \tag{A5.46}$$

$$\frac{\overline{\partial Y}}{\partial r}=Y_r+Y_{ru}\,\bar{u}+\frac{1}{2}Y_{ruu}\,\bar{u}^2+\frac{1}{2}Y_{r\delta\delta}\,\bar{\delta}^2+Y_{vr\delta}\,\bar{v}\bar{\delta}+\frac{1}{2}Y_{rvv}\,\bar{v}^2\ , \tag{A5.47}$$

$$\frac{\overline{\partial Y}}{\partial \delta}=Y_\delta+Y_{\delta u}\,\bar{u}+\frac{1}{2}Y_{\delta uu}\,\bar{u}^2+\frac{1}{2}Y_{\delta\delta\delta}\,\bar{\delta}^2+Y_{v\delta\delta}\,\bar{v}\bar{\delta}+\frac{1}{2}Y_{\delta vv}\,\bar{v}^2\ , \tag{A5.48}$$

In terms of $\Delta\dot{x}$, $\Delta\dot{y}$, $\Delta\dot{\psi}$, $\Delta\psi$ and $\Delta\delta$, the sway hydrodynamic force first order variation is:

$$\boxed{\begin{aligned}\Delta Y=&\left[\frac{\overline{\partial Y}}{\partial u}\cos\bar{\psi}-\frac{\overline{\partial Y}}{\partial v}\sin\bar{\psi}\right]\Delta\dot{x}+\left[\frac{\overline{\partial Y}}{\partial u}\sin\bar{\psi}+\frac{\overline{\partial Y}}{\partial v}\cos\bar{\psi}\right]\Delta\dot{y}\\&+\left[\frac{\overline{\partial Y}}{\partial u}\bar{v}-\frac{\overline{\partial Y}}{\partial v}\bar{u}\right]\Delta\psi+\frac{\overline{\partial Y}}{\partial r}\Delta\dot{\psi}+\frac{\overline{\partial Y}}{\partial \delta}\Delta\delta\ .\end{aligned}} \tag{A5.49}$$

Similarly, the first order variation for the yaw hydrodynamic moment is:

$$\Delta N=N_{ou}\,\Delta u+N_{ouu}\,\bar{u}\,\Delta u+N_v\,\Delta v+\frac{1}{2}N_{vvv}\,\bar{v}^2\Delta v+\frac{1}{2}N_{v\delta\delta}\,\bar{\delta}\left(\bar{\delta}\,\Delta v+2\bar{v}\,\Delta\delta\right)$$
$$+N_{vu}\left(\bar{v}\,\Delta u+\bar{u}\,\Delta v\right)+\frac{1}{2}N_{vuu}\,\bar{u}\left(2\bar{v}\,\Delta u+\bar{u}\,\Delta v\right)+N_r\,\Delta r$$
$$+\frac{1}{2}N_{rvv}\,\bar{v}^2\,\Delta r+\frac{1}{2}N_{r\delta\delta}\,\bar{\delta}^2\,\Delta r+N_{ru}\,\bar{u}\,\Delta r+\frac{1}{2}N_{ruu}\,\bar{u}^2\,\Delta r+N_\delta\,\Delta\delta$$
$$+\frac{1}{2}N_{\delta\delta\delta}\,\bar{\delta}^2\,\Delta\delta+\frac{1}{2}N_{\delta vv}\,\bar{v}\left(2\bar{\delta}\,\Delta v+\bar{v}\,\Delta\delta\right)+N_{\delta u}\left(\bar{\delta}\,\Delta u+\bar{u}\,\Delta\delta\right)$$

$$+\frac{1}{2}N_{\delta uu}\,\bar{u}\left(2\bar{\delta}\,\Delta u+\bar{u}\,\Delta\delta\right)+N_{vr\delta}\,\bar{v}\bar{\delta}\,\Delta r$$
$$=\frac{\overline{\partial N}}{\partial u}\Delta u+\frac{\overline{\partial N}}{\partial v}\Delta v+\frac{\overline{\partial N}}{\partial r}\Delta r+\frac{\overline{\partial N}}{\partial \delta}\Delta\delta\ , \tag{A5.50}$$

where

$$\frac{\overline{\partial N}}{\partial u}=N_{ou}+N_{ouu}\,\bar{u}+N_{vu}\,\bar{v}+N_{vuu}\,\bar{u}\bar{v}+N_{\delta u}\,\bar{\delta}+N_{\delta uu}\,\bar{u}\bar{\delta}\ , \tag{A5.51}$$

$$\frac{\overline{\partial N}}{\partial v}=N_{v}+\frac{1}{2}N_{vvv}\,\bar{v}^2+\frac{1}{2}N_{v\delta\delta}\,\bar{\delta}^2+N_{vu}\,\bar{u}+\frac{1}{2}N_{vuu}\,\bar{u}^2+N_{\delta vv}\,\bar{v}\bar{\delta}\ , \tag{A5.52}$$

$$\frac{\overline{\partial N}}{\partial r}=N_{r}+N_{ru}\,\bar{u}+\frac{1}{2}N_{ruu}\,\bar{u}^2+\frac{1}{2}N_{r\delta\delta}\,\bar{\delta}^2+N_{vr\delta}\,\bar{v}\bar{\delta}+\frac{1}{2}N_{rvv}\,\bar{v}^2\ , \tag{A5.53}$$

$$\frac{\overline{\partial N}}{\partial \delta}=N_{\delta}+N_{\delta u}\,\bar{u}+\frac{1}{2}N_{\delta uu}\,\bar{u}^2+\frac{1}{2}N_{\delta\delta\delta}\,\bar{\delta}^2+N_{v\delta\delta}\,\bar{v}\bar{\delta}+\frac{1}{2}N_{\delta vv}\,\bar{v}^2\ , \tag{A5.54}$$

In terms of $\Delta\dot{x}$, $\Delta\dot{y}$, $\Delta\dot{\psi}$, $\Delta\psi$ and $\Delta\delta$, the yaw hydrodynamic moment first order variation is:

$$\boxed{\begin{aligned}\Delta N=&\left[\frac{\overline{\partial N}}{\partial u}\cos\bar{\psi}-\frac{\overline{\partial N}}{\partial v}\sin\bar{\psi}\right]\Delta\dot{x}+\left[\frac{\overline{\partial N}}{\partial u}\sin\bar{\psi}+\frac{\overline{\partial N}}{\partial v}\cos\bar{\psi}\right]\Delta\dot{y}\\&+\left[\frac{\overline{\partial N}}{\partial u}\bar{v}-\frac{\overline{\partial N}}{\partial v}\bar{u}\right]\Delta\psi+\frac{\overline{\partial N}}{\partial r}\Delta\dot{\psi}+\frac{\overline{\partial N}}{\partial \delta}\Delta\delta\ .\end{aligned}} \tag{A5.55}$$

The term $\Delta\delta$ in equations (A5.43), (A5.49) and (A5.55) is an indirect function of the position and velocity vectors. For the purposes of this report the rudder is fixed and thus $\Delta\delta$ is zero.

APPENDIX 6. FIRST ORDER EXPANSION OF THE EQUATIONS OF MOTION IN TERMS OF THE POSITION VARIABLES AND THEIR TIME DERIVATIVES

Consider an equation of the form:

$$f = \overline{Z} + \sum_{i=1}^{n} \left(\overline{T}_i + \overline{K}_i \, \Delta\ell_i \right) \left(\frac{a_i + b_i \, \Delta x + \alpha_i \, \Delta y + \beta_i \, \Delta\psi}{\ell_i + \Delta\ell_i} \right), \tag{A6.1}$$

where

f: autonomous function that consists exclusively of the terms containing $\Delta\ddot{x}$, $\Delta\dot{x}$, $\Delta\ddot{y}$, $\Delta\dot{y}$, $\Delta\ddot{\psi}$, $\Delta\dot{\psi}$, and $\Delta\psi$.

a_i, b_i, α_i, and β_i are constant numbers that incorporate values of parameters at equilibrium.

$\overline{Z}$: a constant number, representing the hydrodynamic force or moment evaluated at equilibrium.

ℓ_i: $\ell^{(i)}$, the length of the *ith* towing/mooring line.

$\overline{T}_i$: $\overline{T}^{(i)}$, the equilibrium tension of the *ith* towing/mooring line.

$\overline{K}_i$: $\overline{\dfrac{dT_i}{d\ell_i}}$, first derivative of the tension in the *ith* line with respect to its length at equilibrium.

$\Delta\ell_i$: $\overline{\dfrac{\partial\ell_i}{\partial x}} \Delta x + \overline{\dfrac{\partial\ell_i}{\partial y}} \Delta y + \overline{\dfrac{\partial\ell_i}{\partial\psi}} \Delta\psi$, the first order perturbation of the *ith* towing/mooring line length as shown by expression (A2.7).

Equation (A6.1) above can be expanded and recast as:

$$f = \overline{Z} + \frac{\sum_{i=1}^{n} \left\{ \left(\overline{T}_i + \overline{K}_i \Delta\ell_i \right) \left(a_i + b_i \, \Delta x + \alpha_i \, \Delta y + \beta_i \, \Delta\psi \right) \right\}}{\prod_{j=1}^{n} \left(\overline{\ell}_j + \Delta\ell_j \right)} \left[\prod_{\substack{j=1 \\ j \neq i}}^{n} \left(\overline{\ell}_j + \Delta\ell_j \right) \right], \tag{A6.2}$$

where

$$\prod_{j=1}^{n}\left(\bar{\ell}_j + \Delta\ell_j\right) = \left(\bar{\ell}_1 + \Delta\ell_1\right)\left(\bar{\ell}_2 + \Delta\ell_2\right)\cdots\left(\bar{\ell}_n + \Delta\ell_n\right) \ . \tag{A6.3}$$

Multiplying both sides of (A6.2) by $\prod_{j=1}^{n}\left(\bar{\ell}_j + \Delta\ell_j\right)$, this equation is recast as:

$$\begin{aligned} f\left(\prod_{j=1}^{n}\left(\bar{\ell}_j + \Delta\ell_j\right)\right) &= \bar{Z}\left(\prod_{j=1}^{n}\left(\bar{\ell}_j + \Delta\ell_j\right)\right) \\ &+ \sum_{i=1}^{n}\left\{\left(\bar{T}_i + \bar{K}_i\,\Delta\ell_i\right)\left(a_i + b_i\,\Delta x + \alpha_i\,\Delta y + \beta_i\,\Delta\psi\right)\right\}\prod_{\substack{j=1\\ j\neq i}}^{n}\left(\bar{\ell}_j + \Delta\ell_j\right) \ . \end{aligned} \tag{A6.4}$$

By expanding and linearizing the equation above we obtain:

$$\begin{aligned} f\left(\prod_{j=1}^{n}\left(\bar{\ell}_j\right)\right) &= \bar{Z}\left(\prod_{j-1}^{n}\left(\bar{\ell}_j\right)\right) + \bar{Z}\sum_{i=1}^{n}\left\{\frac{\Delta\ell_i}{\bar{\ell}_i}\prod_{j=1}^{n}\left(\bar{\ell}_j\right)\right\} \\ &+ \sum_{i=1}^{n}\left\{\frac{\bar{T}_i}{\bar{\ell}_i}a_i\left(\prod_{j=1}^{n}\left(\bar{\ell}_j\right)\right)\right\} + \sum_{i=1}^{n}\left\{\frac{\bar{T}_i}{\bar{\ell}_i}\left(b_i\,\Delta x + \alpha_i\,\Delta y + \beta_i\,\Delta\psi\right)\left(\prod_{j=1}^{n}\left(\bar{\ell}_j\right)\right)\right\} \\ &+ \sum_{i=1}^{n}\left\{\frac{\bar{T}_i}{\bar{\ell}_i}a_i\left(\prod_{j=1}^{n}\left(\bar{\ell}_j\right)\right)\sum_{k=1}^{n}\frac{\Delta\ell_k}{\bar{\ell}_k}\right\} \\ &- \sum_{i=1}^{n}\left\{\frac{\bar{T}_i}{\bar{\ell}_i}a_i\left(\prod_{j=1}^{n}\left(\bar{\ell}_j\right)\right)\frac{\Delta\ell_i}{\bar{\ell}_i}\right\} + \sum_{i=1}^{n}\left\{\frac{\bar{K}_i}{\bar{\ell}_i}a_i\left(\prod_{j=i}^{n}\left(\bar{\ell}_j\right)\right)\Delta\ell_i\right. \ . \end{aligned} \tag{A6.5}$$

The positive term $\prod_{j=1}^{n}\left(\bar{\ell}_j\right)$ is common to all terms of the equation. Dividing by $\prod_{j=1}^{n}\left(\bar{\ell}_j\right)$ equation (A6.5) becomes:

$$\begin{aligned} f &= \bar{Z} + \bar{Z}\sum_{i=1}^{n}\frac{\Delta\ell_i}{\bar{\ell}_i} + \sum_{i=1}^{n}\frac{\bar{T}_i}{\bar{\ell}_i}a_i + \sum_{i=1}^{n}\frac{\bar{T}_i}{\bar{\ell}_i}b_i\,\Delta x + \sum_{i=1}^{n}\frac{\bar{T}_i}{\bar{\ell}_i}\alpha_i\,\Delta y + \sum_{i=1}^{n}\frac{\bar{T}_i}{\bar{\ell}_i}\beta_i\,\Delta\psi \\ &+ \sum_{i=1}^{n}\frac{\bar{T}_i}{\bar{\ell}_i}a_i\sum_{k=1}^{n}\frac{\Delta\ell_k}{\bar{\ell}_k} - \sum_{i=1}^{n}\frac{\bar{T}_i}{\bar{\ell}_i}a_i\frac{\Delta\ell_i}{\bar{\ell}_i} + \sum_{i=1}^{n}\frac{\bar{K}_i}{\bar{\ell}_i}a_i\,\Delta\ell_i \ . \end{aligned} \tag{A6.6}$$

Substituting $\Delta\ell_i = \frac{\partial\overline{\ell}_i}{\partial x}\Delta x + \frac{\partial\overline{\ell}_i}{\partial y}\Delta y + \frac{\partial\overline{\ell}_i}{\partial\psi}\Delta\psi$ and $\overline{K}_i = \frac{\overline{dT}_i}{d\ell_i}$ in equation (A6.6), the expression for the equation of motion becomes:

$$
\begin{aligned}
f = {} & \overline{Z} + \sum_{i=1}^{n}\left(\frac{\overline{T}_i}{\overline{\ell}_i}a_i\right) + \overline{Z}\sum_{i=1}^{n}\left(\frac{1}{\overline{\ell}_i}\frac{\partial\overline{\ell}_i}{\partial x}\right)\Delta x + \sum_{i=1}^{n}\left(\frac{\overline{T}_i}{\overline{\ell}_i}b_i\right)\Delta x \\
& + \sum_{i=1}^{n}\left(\frac{\overline{T}_i}{\overline{\ell}_i}a_i\sum_{k=1}^{n}\left(\frac{1}{\overline{\ell}_k}\frac{\partial\overline{\ell}_k}{\partial x}\right)\right)\Delta x - \sum_{i=1}^{n}\left(\frac{\overline{T}_i}{\overline{\ell}_i^{\,2}}a_i\frac{\partial\overline{\ell}_i}{\partial x}\right)\Delta x \\
& + \sum_{i=1}^{n}\left(\frac{\overline{dT}_i}{d\ell_i}\frac{a_i}{\overline{\ell}_i}\frac{\partial\overline{\ell}_i}{\partial x}\right)\Delta x + \overline{Z}\sum_{i=1}^{n}\left(\frac{1}{\overline{\ell}_i}\frac{\partial\overline{\ell}_i}{\partial y}\right)\Delta y + \sum_{i=1}^{n}\left(\frac{\overline{T}_i}{\overline{\ell}_i}\alpha_i\right)\Delta y \\
& + \sum_{i=1}^{n}\left(\frac{T_i}{\overline{\ell}_i}a_i\sum_{k=1}^{n}\left(\frac{1}{\overline{\ell}_k}\frac{\partial\overline{\ell}_k}{\partial y}\right)\right)\Delta y - \sum_{i=1}^{n}\left(\frac{\overline{T}_1}{\overline{\ell}_i^{\,2}}a_i\frac{\partial\overline{\ell}_i}{\partial y}\right)\Delta y \\
& + \sum_{i=1}^{n}\left(\frac{\overline{dT}_i}{d\ell_i}\frac{a_i}{\overline{\ell}_i}\frac{\partial\overline{\ell}_i}{\partial y}\right)\Delta y + \overline{Z}\sum_{i=1}^{n}\left(\frac{1}{\overline{\ell}_i}\frac{\partial\overline{\ell}_i}{\partial\psi}\right)\Delta\psi + \sum_{i=1}^{n}\left(\frac{\overline{T}_i}{\overline{\ell}_i}\beta_i\right)\Delta\psi \\
& + \sum_{i=1}^{n}\left(\frac{\overline{T}_i}{\overline{\ell}_i}a_i\sum_{k=1}^{n}\left(\frac{1}{\overline{\ell}_k}\frac{\partial\overline{\ell}_k}{\partial\psi}\right)\right)\Delta\psi - \sum_{i=1}^{n}\left(\frac{\overline{T}_i}{\overline{\ell}_i^{\,2}}a_i\frac{\partial\overline{\ell}_i}{\partial\psi}\right)\Delta\psi + \sum_{i=1}^{n}\left(\frac{\overline{dT}_i}{d\ell_i}\frac{a_i}{\overline{\ell}_i}\frac{\partial\overline{\ell}_i}{\partial\psi}\right)\Delta\psi \ . \qquad \text{(A6.7)}
\end{aligned}
$$

The first two terms on the right hand side of equation (A6.7) are zero at equilibrium, i.e.,

$$
\overline{Z} + \sum_{i=1}^{n}\left(\frac{\overline{T}_i}{\overline{\ell}_i}a_i\right) = 0 \ , \qquad \text{(A6.8)}
$$

and the equation of motion reduces to the simplified form:

$$
\boxed{
\begin{aligned}
f = {} & \sum_{i=1}^{n}\left\{\frac{\overline{T}_i}{\overline{\ell}_i}\left[b_i - \frac{a_i}{\overline{\ell}_i}\frac{\partial\overline{\ell}_i}{\partial x}\right] + \frac{\overline{dT}_i}{d\ell_i}\frac{a_i}{\overline{\ell}_i}\frac{\partial\overline{\ell}_i}{\partial x}\right\}\Delta x + \sum_{i=1}^{n}\left\{\frac{\overline{T}_i}{\overline{\ell}_i}\left[\alpha_i - \frac{a_i}{\overline{\ell}_i}\frac{\partial\overline{\ell}_i}{\partial y}\right] + \frac{\overline{dT}_i}{d\ell_i}\frac{a_i}{\overline{\ell}_i}\frac{\partial\overline{\ell}_i}{\partial y}\right\}\Delta y \\
& + \sum_{i=1}^{n}\left\{\frac{\overline{T}_i}{\overline{\ell}_i}\left[\beta_i - \frac{a_i}{\overline{\ell}_i}\frac{\partial\overline{\ell}_i}{\partial\psi}\right] + \frac{\overline{dT}_i}{d\ell_i}\frac{a_i}{\overline{\ell}_i}\frac{\partial\overline{\ell}_i}{\partial\psi}\right\}\Delta\psi \ . \qquad \text{(A6.9)}
\end{aligned}
}
$$

The right hand side of (A6.9) is now in terms of the position variables Δx, Δy and $\Delta\psi$. Expanding the right hand side of equation (A6.9), and incorporating the $\Delta\psi$ term from the left hand side f to the right hand side, yields the expressions for equations (4.6), (4.11), and (4.16) for the surge, sway, and yaw directions.

Example: 3-line System

Consider a 3-line towing/ mooring system. Expression (A6.1) is written for the three lines as:

$$
\begin{aligned}
f &= \bar{Z} + \sum_{i=1}^{3} \left(\bar{T}_i + \bar{K}_i\,\Delta\ell_i\right) \frac{\left(a_i + b_i\,\Delta x + \alpha_i\,\Delta y + \beta_i\,\Delta\psi\right)}{\left(\bar{\ell}_i + \Delta\ell_i\right)} \\
&= \bar{Z} + \frac{\left(\bar{T}_1 + \bar{K}_1\,\Delta\ell_1\right)\left(a_1 + b_1\,\Delta x + \alpha_1\,\Delta y + \beta_1\,\Delta\psi\right)}{\bar{\ell}_1 + \Delta\ell_1} \\
&\quad + \frac{\left(\bar{T}_2 + \bar{K}_2\,\Delta\ell_2\right)\left(a_2 + b_2\,\Delta x + \alpha_2\,\Delta y + \beta_2\,\Delta\psi\right)}{\bar{\ell}_2 + \Delta\ell_2} \\
&\quad + \frac{\left(\bar{T}_3 + \bar{K}_3\,\Delta\ell_3\right)\left(a_3 + b_3\,\Delta x + \alpha_3\,\Delta y + \beta_3\,\Delta\psi\right)}{\bar{\ell}_3 + \Delta\ell_3} .
\end{aligned}
$$

Expanding the equation above we have

$$
\begin{aligned}
f &= \bar{Z} + \frac{\left(\bar{T}_1 + \bar{K}_1\,\Delta\ell_1\right)\left(a_1 + b_1\,\Delta x + \alpha_1\,\Delta y + \beta_1\,\Delta\psi\right)\left(\bar{\ell}_2 + \Delta\ell_2\right)\left(\bar{\ell}_3 + \Delta\ell_3\right)}{\left(\bar{\ell}_1 + \Delta\ell_1\right)\left(\bar{\ell}_2 + \Delta\ell_2\right)\left(\bar{\ell}_3 + \Delta\ell_3\right)} \\
&\quad + \frac{\left(\bar{T}_2 + \bar{K}_2\,\Delta\ell_2\right)\left(a_2 + b_2\,\Delta x + \alpha_2\,\Delta y + \beta_2\,\Delta\psi\right)\left(\bar{\ell}_1 + \Delta\ell_1\right)\left(\bar{\ell}_3 + \Delta\ell_3\right)}{\left(\bar{\ell}_1 + \Delta\ell_1\right)\left(\bar{\ell}_2 + \Delta\ell_2\right)\left(\bar{\ell}_3 + \Delta\ell_3\right)} \\
&\quad + \frac{\left(\bar{T}_3 + \bar{K}_3\,\Delta\ell_3\right)\left(a_3 + b_3\,\Delta x + \alpha_3\,\Delta y + \beta_3\,\Delta\psi\right)\left(\bar{\ell}_1 + \Delta\ell_1\right)\left(\bar{\ell}_2 + \Delta\ell_2\right)}{\left(\bar{\ell}_1 + \Delta\ell_1\right)\left(\bar{\ell}_2 + \Delta\ell_2\right)\left(\bar{\ell}_3 + \Delta\ell_3\right)} .
\end{aligned}
$$

Multiplying both sides of the equation above by the product $\left(\bar{\ell}_1 + \Delta\ell_1\right)\left(\bar{\ell}_2 + \Delta\ell_2\right)\left(\bar{\ell}_3 + \Delta\ell_3\right)$, and linearizing yields:

$$
\begin{aligned}
f\left(\bar{\ell}_1\bar{\ell}_2\bar{\ell}_3\right) &= \bar{Z}\left(\bar{\ell}_1\bar{\ell}_2\bar{\ell}_3\right) + \bar{Z}\left(\bar{\ell}_2\bar{\ell}_3\,\Delta\ell_1 + \bar{\ell}_1\bar{\ell}_3\Delta\ell_2 + \bar{\ell}_1\bar{\ell}_2\,\Delta\ell_3\right) \\
&\quad + \bar{T}_1 a_1\left(\bar{\ell}_2\bar{\ell}_3 + \bar{\ell}_3\,\Delta\ell_2 + \bar{\ell}_2\,\Delta\ell_3\right) + \bar{T}_1 b_1\,\bar{\ell}_2\bar{\ell}_3\,\Delta x + \bar{T}_1\alpha_1\,\bar{\ell}_2\bar{\ell}_3\,\Delta y \\
&\quad + \bar{T}_1\beta_1\,\bar{\ell}_2\bar{\ell}_3\,\Delta\psi + \bar{T}_2 a_2\left(\bar{\ell}_1\bar{\ell}_3 + \bar{\ell}_3\,\Delta\ell_1 + \bar{\ell}_1\,\Delta\ell_3\right) + \bar{T}_2 b_2\bar{\ell}_1\bar{\ell}_3\,\Delta x \\
&\quad + \bar{T}_2\alpha_2\,\bar{\ell}_1\bar{\ell}_3\,\Delta y + \bar{T}_2\beta_2\,\bar{\ell}_1\bar{\ell}_3\,\Delta\psi + \bar{T}_3 a_3\left(\bar{\ell}_1\bar{\ell}_2 + \bar{\ell}_2\,\Delta\ell_1 + \bar{\ell}_1\,\Delta\ell_2\right) \\
&\quad + \bar{T}_3 b_3\,\bar{\ell}_1\bar{\ell}_2\,\Delta x + \bar{T}_3\alpha_3\,\bar{\ell}_1\bar{\ell}_2\,\Delta y + \bar{T}_3\beta_3\,\bar{\ell}_1\bar{\ell}_2\,\Delta\psi \\
&\quad + \bar{K}_1 a_1\,\bar{\ell}_2\bar{\ell}_3\,\Delta\ell_1 + \bar{K}_2 a_2\,\bar{\ell}_1\bar{\ell}_3\,\Delta\ell_2 + \bar{K}_3 a_3\,\bar{\ell}_1\bar{\ell}_2\,\Delta\ell_3 ,
\end{aligned}
$$

or

$$
\begin{aligned}
f(\bar{\ell}_1\bar{\ell}_2\bar{\ell}_3) = {} & \bar{Z}(\bar{\ell}_1\bar{\ell}_2\bar{\ell}_3) + Z\left(\frac{\Delta\ell_1}{\bar{\ell}_1} + \frac{\Delta\ell_2}{\bar{\ell}_2} + \frac{\Delta\ell_3}{\bar{\ell}_3}\right)(\bar{\ell}_1\bar{\ell}_2\bar{\ell}_3) \\
& + \left(\frac{\bar{T}_1}{\bar{\ell}_1}a_1 + \frac{\bar{T}_2}{\bar{\ell}_2}a_2 + \frac{\bar{T}_3}{\bar{\ell}_3}a_3\right)\bar{\ell}_1\bar{\ell}_2\bar{\ell}_3 + \left(\frac{\bar{T}_1}{\bar{\ell}_1}b_1 + \frac{\bar{T}_2}{\bar{\ell}_2}b_2 + \frac{\bar{T}_3}{\bar{\ell}_3}b_3\right)\bar{\ell}_1\bar{\ell}_2\bar{\ell}_3\,\Delta x \\
& + \left(\frac{\bar{T}_1}{\bar{\ell}_1}\alpha_1 + \frac{\bar{T}_2}{\bar{\ell}_2}\alpha_2 + \frac{\bar{T}_3}{\bar{\ell}_3}\alpha_3\right)\bar{\ell}_1\bar{\ell}_2\bar{\ell}_3\,\Delta y + \left(\frac{\bar{T}_i}{\bar{\ell}_i}\beta_i + \frac{\bar{T}_2}{\bar{\ell}_2}\beta_2 + \frac{\bar{T}_3}{\bar{\ell}_3}\beta_3\right)\bar{\ell}_1\bar{\ell}_2\bar{\ell}_3\,\Delta\psi \\
& + \left(\frac{\bar{T}_1}{\bar{\ell}_1}a_1 + \frac{\bar{T}_2}{\bar{\ell}_2}a_2 + \frac{\bar{T}_3}{\bar{\ell}_3}a_3\right)\left(\frac{\Delta\ell_1}{\bar{\ell}_1} + \frac{\Delta\ell_2}{\bar{\ell}_2} + \frac{\Delta\ell_3}{\bar{\ell}_3}\right)\bar{\ell}_1\bar{\ell}_2\bar{\ell}_3 \\
& - \left(\frac{\bar{T}_1}{\bar{\ell}_1^{\,2}}a_1\,\Delta\ell_1 + \frac{\bar{T}_2}{\bar{\ell}_2^{\,2}}a_2\,\Delta\ell_2 + \frac{\bar{T}_3}{\bar{\ell}_3^{\,2}}a_3\,\Delta\ell_3\right)\bar{\ell}_1\bar{\ell}_2\bar{\ell}_3 \\
& + \left(\bar{K}_1\frac{a_1}{\bar{\ell}_1}\Delta\ell_1 + \bar{K}_2\frac{a_2}{\bar{\ell}_2}\Delta\ell_2 + \bar{K}_3\frac{a_3}{\bar{\ell}_3}\Delta\ell_3\right)\bar{\ell}_1\bar{\ell}_2\bar{\ell}_3 \ .
\end{aligned}
$$

The positive term $\bar{\ell}_1\bar{\ell}_2\bar{\ell}_3$ is common to all terms, and can be cancelled out. After substitution of the relations for $\Delta\ell_i$ (A2.7) and $\bar{K}_i$ (A3.5), and noticing, from (A6.8) that

$$
\bar{Z} + \frac{\bar{T}_1}{\bar{\ell}_1}a_1 + \frac{\bar{T}_2}{\bar{\ell}_2}a_2 + \frac{\bar{T}_3}{\bar{\ell}_3}a_3 = 0 \ ,
$$

that equation becomes:

$$
\begin{aligned}
f = {} & \left(\frac{\bar{T}_1}{\bar{\ell}_1}b_1 + \frac{\bar{T}_2}{\bar{\ell}_2}b_2 + \frac{\bar{T}_3}{\bar{\ell}_3}b_3\right)\Delta x + \left(\frac{\bar{T}_1}{\bar{\ell}_1}\alpha_1 + \frac{\bar{T}_2}{\bar{\ell}_2}\alpha_2 + \frac{\bar{T}_3}{\bar{\ell}_3}\alpha_3\right)\Delta y + \left(\frac{\bar{T}_1}{\bar{\ell}_1}\beta_1 + \frac{\bar{T}_2}{\bar{\ell}_2}\beta_2 + \frac{\bar{T}_3}{\bar{\ell}_3}\beta_3\right)\Delta\psi \\
& - \left(\frac{\bar{T}_1}{\bar{\ell}_1^{\,2}}a_1\frac{\partial\bar{\ell}_1}{\partial x} + \frac{\bar{T}_2}{\bar{\ell}_2^{\,2}}a_2\frac{\partial\bar{\ell}_2}{\partial x} + \frac{\bar{T}_3}{\bar{\ell}_3^{\,2}}a_3\frac{\partial\bar{\ell}_3}{\partial x}\right)\Delta x - \left(\frac{\bar{T}_1}{\bar{\ell}_1^{\,2}}a_1\frac{\partial\bar{\ell}_1}{\partial y} + \frac{\bar{T}_2}{\bar{\ell}_2^{\,2}}a_2\frac{\partial\bar{\ell}_2}{\partial y} + \frac{\bar{T}_3}{\bar{\ell}_3^{\,2}}a_3\frac{\partial\bar{\ell}_3}{\partial y}\right)\Delta y \\
& - \left(\frac{\bar{T}_1}{\bar{\ell}_1^{\,2}}a_1\frac{\partial\bar{\ell}_1}{\partial\psi} + \frac{\bar{T}_2}{\bar{\ell}_2^{\,2}}a_2\frac{\partial\bar{\ell}_2}{\partial\psi} + \frac{\bar{T}_3}{\bar{\ell}_3^{\,2}}a_3\frac{\partial\bar{\ell}_3}{\partial\psi}\right)\Delta\psi \\
& + \left(\frac{\overline{dT_1}}{d\ell_1}\frac{a_1}{\bar{\ell}_1}\frac{\partial\bar{\ell}_1}{\partial x} + \frac{\overline{dT_2}}{d\ell_2}\frac{a_2}{\bar{\ell}_2}\frac{\partial\bar{\ell}_2}{\partial x} + \frac{\overline{dT_2}}{d\ell_2}\frac{a_3}{\bar{\ell}_3}\frac{\partial\bar{\ell}_3}{\partial x}\right)\Delta x \\
& + \left(\frac{\overline{dT_1}}{d\ell_1}\frac{a_1}{\bar{\ell}_1}\frac{\partial\bar{\ell}_1}{\partial y} + \frac{\overline{dT_2}}{d\ell_2}\frac{a_2}{\bar{\ell}_2}\frac{\partial\bar{\ell}_2}{\partial y} + \frac{\overline{dT_2}}{d\ell_2}\frac{a_3}{\bar{\ell}_3}\frac{\partial\bar{\ell}_3}{\partial y}\right)\Delta y \\
& + \left(\frac{\overline{dT_1}}{d\ell_1}\frac{a_1}{\bar{\ell}_1}\frac{\partial\bar{\ell}_1}{\partial\psi} + \frac{\overline{dT_2}}{d\ell_2}\frac{a_2}{\bar{\ell}_2}\frac{\partial\bar{\ell}_2}{\partial\psi} + \frac{\overline{dT_2}}{d\ell_2}\frac{a_3}{\bar{\ell}_3}\frac{\partial\bar{\ell}_3}{\partial\psi}\right)\Delta\psi \ .
\end{aligned}
$$

The equation above is the expansion of (A6.9) for a 3-line system.

BIBLIOGRAPHY

BIBLIOGRAPHY

[1] Abkowitz, M. A., Stability and Motion Control of Ocean Vehicles, MIT Press, Cambridge, Massachussets, 1972.

[2] Abkowitz, M. A., "Measurement of Hydrodynamic Characteristics From Ship Maneuvering Trials by System Identification," SNAME Transactions, Vol. 88, 1980, pp. 283-318.

[3] Benford, H., "The Control of Yaw in Towed Barges," *International Shipbuilding Progress*, Vol. 2, No. 11, 1955, pp. 269-318.

[4] Bernitsas, M. M., and Chung, J. S., "Nonlinear Stability and Simulation of Two-Line Ship Towing and Mooring," *Journal of Applied Ocean Research*, Vol. 12, No. 2, April 1990, pp. 77-92.

[5] Bernitsas, M. M., and Garza-Rios, L. O., "Effect of Mooring Line Arrangement on the Dynamics of Spread Mooring Systems," *Journal of Offshore Mechanics and Arctic Engineering* (JOMAE), Vol. 118, No. 1, February 1996, pp. 7-20.

[6] Bernitsas, M. M., and Kekridis, N. S., "Simulation and Stability of Ship Towing," *International Shipbuilding Progress*, Vol. 32, No. 369, May 1985, pp. 112-123.

[7] Bernitsas M. M., and Papoulias, F. A., "Nonlinear Stability and Maneuvering Simulation of Single Point Mooring Systems," Proceedings of Offshore Station Keeping Symposium, SNAME, Houston, Texas, February 1-2, 1990, pp. 1-19.

[8] Bernitsas, M. M., Kekridis, N. S., and Papoulias, F. A., "Solution of the Problem of Ship Towing by Elastic Rope Using Perturbation," *Journal of Ship Research*, Vol. 30, No. 1, March 1986, pp. 51-68.

[9] Beyer, W. H., CRC Standard Mathematical Tables, 28th Edition, CRC Press, Ann Arbor, 1990.

[10] Brix, J. E., "Lighters and Seagoing Barges and the Design of Yaw Controlling Units," 2nd. International Tug Conference, London, October 1971.

[11] Chung, J. S., and Bernitsas, M. M., "Dynamics of Two-Line Ship Towing/Mooring Systems: Bifurcations, Singularities of Stability Boundaries, Chaos," *Journal of Ship Research*, Vol. 36, No.2, June 1992, pp. 93-105.

[12] Eda, H., "Course Stability, Turning Performance, and Connection Force of Barge Systems in Coastal Seaways," SNAME Transactions, Vol. 80, 1972, pp. 299-328.

[13] Fujino, M., "The Effect of Frequency Dependence on Stability Derivatives on Maneuvering Motion," *International Shipbuilding Progress*, Vol. 22, No. 256, 1975, pp. 416-432.

[14] Garza-Rios, L. O., "Development of a Design Methodology for Mooring Systems Based on Catastrophe Theory," Doctoral Dissertation, Department of Naval Architecture and Marine Engineering, University of Michigan, Ann Arbor, May 1996.

[15] Guckenheimer, J., and Holmes, P., Nonlinear Oscillations, Dynamical Systems, and Bifurcations of Vector Fields, Springer-Verlag, New York, Inc., 1983.

[16] Jiang, T., and Schellin, T. E., "Maneuvering Simulation of a Tanker Moored in a Steady Current Including Hydrodynamic Memory Effects and Stability Analysis," Proceedings, RINA International Conference on Ship Maneuverability, London, April 1987, pp. 1-12.

[17] Jiang, T., and Schellin, T. E., "Motion Prediction of a Single Point Moored Tanker Subjected to Current, Wind and Waves," Proceedings, of the ASME 7th International Conference on Offshore Mechanics and Arctic Engineering (OMAE), Vol. II, Houston, Texas, February 1988, pp. 317-326.

[18] Kwan, C. T., "Design Practice for Mooring of Floating Production Systems," *Marine Technology*, Vol. 28, No. 1, January 1991, pp. 30-38.

[19] Latorre, R., "Improvement of Barge Towing, Translations of Selected Japanese and Russian Technical Articles," Report to the University of Michigan, Department of Naval Architecture and Marine Engineering, Ann Arbor, Publication No. 206, May 1980.

[20] Mc Kenna, H. A., and Wong, R. K., "Synthetic Fiber Rope, Properties and Calculations Relating to Mooring Systems," *Deepwater Mooring and Drilling*, ASME Transactions, Ocean Engineering Division, Vol. 7, December 1979, pp. 189-203.

[21] Papoulias, F. A., and Bernitsas, M. M., "MOORLINE: A Program for Static Analysis of MOORing LINEs," Report to the University of Michigan/Sea Grant/Industry Consortium in Offshore Engineering, and Department of Naval Architecture and Marine Engineering, The University of Michigan, Ann Arbor, Publication No. 309, May 1988.

[22] Routh, E. J., Dynamics of a System of Rigid Bodies, Macmillan, New York, 1892.

[23] Seydel, R., From Equilibrium to Chaos, Elsevier Science Publishing Co., Inc., New York, 1988.

[24] Sharma, S. D., Jiang, T., and Schellin, T. E., "Dynamic Instability and Chaotic Motions of a Single Point Moored Tanker," Proceedings of the 17th ONR Symposium on Naval Hydrodynamics, The Hague, Holland, August 1988, pp. 543-562.

[25] Strandhagen, A. G., Schoenherr, K. E., and Kobayashi, F. M., "The Stability on Course of Towed Ships," SNAME Transactions, Vol. 58, 1950, pp. 32-66.

The University of Michigan is an equal opportunity/affirmative action employer. Under applicable federal and state laws, including Title IX of the Education Amendments of 1972, the University does not discriminate on the basis of sex, race, or other prohibited matters in employment, in educational programs and activities, or in admissions. Inquiries or complaints may be addressed to the University's Director of Affirmative Action and Title IX Compliance: Dr. Gwendolyn C. Baker, 5072 Administration Building, 763-0235.